COLUMBIA CITY COUNCIL MEETING AGENDA
MONDAY, NOVEMBER 25, 2019

The Columbia City Council will conduct a Work Session at 2 p.m. and Meeting at 6 p.m. on Monday, November 25, 2019 at City Hall, 1737 Main Street, Columbia, SC 29201.

The Honorable Mayor Stephen K. Benjamin
The Honorable Sam Davis, District I ▪ The Honorable Tameika Isaac Devine, At-Large
The Honorable Moe Baddourah, District III ▪ The Honorable Howard E. Duvall, Jr., At-Large
The Honorable Edward H. McDowell, Jr., District II ▪ The Honorable Daniel J. Rickenmann, District IV

Prior to entering the meeting please turn all electronic communication devices to the silent, vibrate or off position. All presenters are asked to speak directly into the microphone for recording purposes.

WORK SESSION - 2:00 P.M.

CALL TO ORDER

INVOCATION

DISCUSSION OF COMMERCIAL CORRIDOR REDEVELOPMENT PROGRAM ACTION ITEMS

1. Parking Improvements - Ms. Missy Gentry, P. E., Assistant City Manager and Ms. Elle Matney, Director of Parking Services

2. Commercial Retention and Redevelopment (CRR) Program Updates and Recommendations - Ms. Melissa L. Lindler, Office of Business Opportunities Director

    - *CRR Vacant Building Incentive Program*

    - *Fats, Oils, and Grease (FOG) Forgivable Loan Program*

CITY COUNCIL DISCUSSION

3. Economic Development Partners Update - Mr. Ryan Coleman, Director of Economic Development

4. Kilbourne Road Traffic Calming Measures - The Honorable Daniel J. Rickenmann

COLUMBIA CITY COUNCIL MEETING AGENDA
MONDAY, NOVEMBER 25, 2019

EXECUTIVE SESSION

5. Receipt of legal advice relating to a pending, threatened or potential claim – S.C. Code §30-4-70(a)(2)

   Allen Benedict Court
   Automated Metering Infrastructure - Meter Installations
   Taboo

6. Receipt of legal advice related to matters covered by attorney-client privilege pursuant to §30-4-70(a)(2)

   125 Peyton Road
   Sewer Expansion Fee
   Columbia Urban League
   External Funding Requests
   Hospitality Tax Funding
   Revenue Options
   Legal Update 2019

7. Discussion of negotiations incident to proposed contractual arrangements pursuant to S. C. Code §30-4-70(a)(2)

   Finlay Park
   Park Street Improvements
   2221 Devine Street

8. Discussion of matters relating to proposed location or expansion of services to encourage location or expansion of industries or other businesses pursuant to S.C. Code §30-4-70(a)(2)

   Project Blue
   Ballpark, LLC
   Profitt Dixon
   Kline

9. Discussion of appointment of a person to a public body pursuant to S.C. Code §30-4-70(a)(1)

   Parks and Recreation Foundation

10. Discussion of the employment of an employee pursuant to §30-4-70(a)(1)

    Development Corporations
    City Manager and City Attorney Evaluations

COUNCIL MEETING - 6:00 P.M.

CALL TO ORDER

PLEDGE OF ALLEGIANCE

Boy Scout Troop 10 of East Minister Presbyterian Church will lead the audience in the Pledge of Allegiance.

INVOCATION

ADOPTION OF THE AGENDA

PUBLIC INPUT RELATED TO ITEMS ON THE AGENDA

APPROVAL OF MINUTES

11. Council is asked to approve the October 1, 2019, October 15, 2019, November 18, 2019, and November 19, 2019 City Council Meeting Minutes.

CONSENT AGENDA ITEMS 12 THROUGH 35

12. Council is asked to approve a 5-Year (2020-2025) Consolidated Plan and Analysis to Impediments of Fair Housing Choice Contract, as requested by the Community Development Department. Award to Civitas, LLC in the amount of $58,050. This firm is located in Mount Pleasant, SC.

    Funding Source: Split equally between the City's Federal Grants (CDBG/HOME/HOPWA/CDBG-DR), $14,512.50 per grant. The original budget amount is $58,050.

13. Council is asked to approve a Contract Extension for the acquisition, implementation, and annual maintenance of EnerGov software used for permitting and land management, as requested by the Planning & Development Services Department. Award to Tyler Technologies, Inc. in the amount of $55,515.00. This vendor is located in Dallas, TX.

Funding Source: Development Services - Professional Services (1014101-636600). The original budget amount is $56,000.00.

14. Council is asked to approve a Hardware, Maintenance and Service Contract, as requested by the Information Technology Services Department. Award to the Hewlett Packard Enterprise Company, using SC State Contract #4400011431 in the amount of $64,039.25. This vendor is located in Roseville, CA.

    Funding Source: Information Technology - Maintenance and Service Contract (1011120-638200). The original budget amount is $64,039.25.

15. Council is asked to approve the Purchase of Three (3) Rimage 6000N DVD Auto Burners, as requested by the Columbia Police Department. Award to Coban Technologies, Inc., as a Sole Source, in the amount of $64,200.60. This vendor is located in Houston, TX.

    Funding Source: Police Administrative Services-Machinery & Equip. Capital (1012402-658300). The original budget amount is $65,000.00.

16. Council is asked to approve a Contract for a Column Repair Project at Police Headquarters, as requested by Support Services. Award to Tyler Construction Group, Inc. in an amount not to exceed $60,217.00. This firm is a certified Local Business Enterprise (LBE) located in Columbia, SC.

    Funding Source: General Support Services 1011201-638100. The original budget amount is $60,217.00.

    The following subcontractors/vendors will be supplying additional services/materials:

    Goldie Construction, LLC of Columbia, SC will be providing installation and painting of the column at 35.6% ($21,000.00) of the total contract value.

    Worthington Millwork of Panama City, FL will be providing the column at 13.4% ($7,913.00) of the total contract value.

    Florence Concrete Products of Florence, SC will be providing the concrete base at 11.9% ($7,000.00) of the total contract value.

17. Council is asked to approve a Professional Services Agreement for Pest Control and Termite Services, as requested by Support Services. Award to All Phase Termite & Pest Control Services in the amount of $104,650.00. This vendor is located in Fort Lawn, SC.

    Funding Source: Support Services Public Building - Maintenance and Service Contract (5511219-638200). The original budget amount for year one (1) is $104,650.00.

18. Council is asked to approve the replacement of the Gym Floor at Pinehurst Park, as requested by the Parks and Recreation Department. Award to Sport Court Carolina, Inc., using the Sourcewell Cooperative Contract in the amount of $83,680.29. This vendor is located in Clover, SC.

    Funding Source: Parks-Buildings and Grounds/Rec Physical Fitness Equipment- Cap (1015104-658900). The original budget amount is $90,000.00.

19. Council is asked to approve an Agreement for Owens Field Park Pump Track Project, as requested by the Parks and Recreation Department. Award to American Ramp Company in the amount of $95,898.00. This firm is located in Joplin, MO.

    Funding Source: Owens Field Park Pump Track (4039999-PK006704-658650). The original budget amount is $95,900.00.

20. Council is asked to approve Contract Amendment #4 for Project WM4374; Engineering Services for the Repair of Columbia Canal Head Gates to extend the term of the Agreement from three (3) years to five (5) years, as requested by Columbia Water. Award to Kleinschmidt Associates. This firm is located in Lexington, SC. All other provisions of the Agreement, except as modified herein, remain in full force and effect.

    Funding Source: Flood Recovery Project DR4241 Columbia Canal Head Gates Design Repair Services (2532201-WM4374-638400). The original budgeted amount was $957,112.00 and will not change with this amendment.

    Kleinschmidt is the prime contractor and will provide design repair services for the Columbia Canal Head Gates at 78.1% ($747,981.41) of the total contract value.

    The following sub-consultants will provide additional services:

    Chao and Associates, a MBE firm located in Columbia, SC will provide structural evaluation and field structure as-built services at 26.3% ($109,842.59) of the total contract value for Phases 1 and 2.

    F&ME, located in Columbia, SC will provide subsurface investigation services at 9.1% ($37,800.00) of the total contract value for Phases 1 and 2.

    D&J Machinery & Rigging, LLC located in Lexington, SC will provide Head Gate clean out and inspection services at 10.1% ($42,288.00) of the total contract value for Phases 1 and 2.

    Standard Diving & Marine Contracting, LLC located in Mt. Pleasant, SC, will provide underwater condition assessment services at 4.6% ($19,200.00) of the total contract value for Phases 1 and 2.

21. Council is asked to approve Contract Amendment #3 for Project WM4348; Columbia Canal Embankment Repair Services to extend the term of the agreement for Michael Baker International from three (3) years to five (5) years, as requested by Columbia Water. This firm is located in Columbia, SC. All other provisions of the Agreement, except as modified herein, remain in full force and effect.

Funding Source: DR421 Columbia Canal Embankment Repair Services (WM4348-638400) and 5529999-WM4323-658650. The original budgeted amount was $4,938,139.00 and will not change with this Amendment.

Michael Baker International is the prime and will provide Columbia canal embankment enterprise services at 53.2% ($2,626,543.42) of the contract value. The contract value does not change with this amendment.

The following sub-consultants will provide additional services:

Hazen and Sawyer, located in Columbia, SC will provide water supply/H&H modeling; spillway/dike repair design; construction contract administration; environmental science/natural resources at 13.3% ($655,544.00) of the total contract value.

Kleinschmidt Associates, located in Lexington, SC, will provide FERC coordination locks; gates design; and construction contract administration at 8.5% ($419,378.00) of the total contract value.

F&ME Consultants, Inc., located in Columbia, SC, will provide geotechnical design services at 21.2% ($1,046,089.50) of the total contract value.

CASE Consulting, Inc., (DBE) located in West Columbia, SC, will provide construction administration support services at 0.8% ($37,564.00) of the total contract value.

Construction Support Services, located in Hopkins, SC, will provide land surveying services at 0.6% ($32,000.00) of the total contract value.

MA Engineering Consultants, located in Carey, NC, will provide geospatial/GIS/photogrammetry services at 1.3% ($64,817.16) of the total contract value.

ESP Associates, located in Tampa, FL, will provide hydrographic survey services at 0.8% ($38,500.00) of the total contract value.

New South Engineering, located in Columbia, SC, will provide historic context for National Register research at 0.4% ($17,702.92) of the total contract value.

22. Council is asked to approve Water Quality Consulting Services for the Columbia Canal Water Treatment Plant and the Lake Murray Water Treatment Plant for Fiscal Year 2019-2020, as requested by Columbia Water. Award to Black & Veatch Corporation, as a Sole Source, in an amount not to exceed $75,000.00. This firm is located in Columbia, SC.

    Funding Source: Utility Columbia Canal Water Treatment Plant (5516206-636700). The original budgeted amount is $75,000.00.

23. Council is asked to approve a Contract for Project WM4481; 2"/4" PVC/DIP Water Main Upgrades along Eastpine Court and Eastpine Place, as requested by Columbia Water. Award to North American Pipeline Management, Inc. in an amount not to exceed $110,416.80, which includes contingency. This firm is located in Marietta, GA.

    Funding Source: 5529999-WM4481-658650. The original budget amount is $115,000.00.

    This is a Mentor Protégé Program project. North American Pipeline Management, Inc. of Marietta, GA is the mentor and will be performing pipe work, trucking and restoration services at 79% ($72,692.00) of the total contract value. Southern Roots Landscape Management Inc., a Local Business Enterprise (LBE) of Columbia, SC, is the protégé and will be performing water line construction at 21% ($19,322.00) of the total contract value.

24. Council is asked to approve Ductile Iron Insertion Valve Equipment and Training for Water Distribution Field Personnel, as requested by Columbia Water. Award to Team Industrial Services Inc., as a Sole Source, in an amount not to exceed $140,100.00. This firm is located in Sugar Land, TX.

    Funding Source: Utilities Water Distribution & Maintenance - Machinery & Equipment - Capital (5516203-658300). The original budget amount is $140,100.00.

25. Council is asked to approve Contract Amendment #2 for Project SS7306; Wastewater Collection Flow Monitoring Services, as requested by Columbia Water. Award to Woolpert, Inc. in the amount of $157,419.00. This firm is located in Columbia, SC.

    Funding Source: 5511706-638305. The original budget amount is $250,000.00.

26. Council is asked to approve an Agreement for Project SS7382; Design of the Wastewater Compliance and Lift Station Maintenance Facility, as requested by Columbia Water. Award to Goodwyn Mills & Cawood, Inc. in the amount of $330,000.00. This firm has a local office in Columbia, SC.

    Funding Source: 5529999-SS738202-658650. The original budget amount is $330,000.00.

This is a Clean Water 2020 Program Project. Goodwyn Mills & Cawood, Inc., is the prime and will provide a narrative, preliminary site plan, boring locations, and specific project needs at 60.3% ($199,000.00) of the contract value. There was a 10% CDBE goal placed on this project. The goal was met at 22.5%.

The following sub-consultants will provide additional services:

Chao & Associates, a Columbia Disadvantaged Business Enterprise (CDBE) of Columbia, SC will provide floodplain mitigation engineering and structural engineering at 16.7% ($55,000.00) of the contract value.

Swgert & Associates, of Cayce, SC will provide mechanical engineering at 5.6% ($18,500.00) of the contract value.

Belka Engineering Associates, of Columbia, SC will provide electrical engineering at 9.1% ($30,000) of the contract value.

Rebecca M. Looney & Associates, a Columbia Disadvantaged Business Enterprise (CDBE) of Ballentine, SC will provide landscape architecture at 5.8% ($19,000.00) of the contract value.

Matthiessen Cost Consultants, LLC, of Columbia, SC will provide cost estimating at 2.6% ($8,500.00) of the contract value.

27. Council is asked to approve a contract for Project WM3906; Water Main Construction along Sylvan Drive and Satchel Ford Road, as requested by Columbia Water. Award to Stutts & Williams, LLC in an amount not to exceed $1,707,460.43, which includes contingency. This firm is located in Lexington, SC.

Funding Source: Water and Sewer Capital Project Cost (5529999-WM3906-658650). The original budget is $1,890,618.40.

This is a Mentor Protégé Program project. Stutts & Williams, LLC, a Local Business Enterprise and a Small Business Enterprise, is the Mentor and will be performing water line installation services at 40% ($603,020.00) of the total contract value. Hammerhead Utilities, LLC is the Protégé and will be performing water line installation services at 20% ($300,755.00) of the total contract value.

The following subcontractors/suppliers will be providing additional services/supplies on this contract:

Ferguson Waterworks of Elgin, SC will be providing materials for water line construction at 33% ($500,000.00) of the total contract value.

Knight's Companies of Summerville, SC will be providing flowable fill and concrete at 7% ($100,000.00) of the total contract value.

28. Council is asked to approve a Contract for Projects WM4403 and WM4404; Water Main Upgrades for Hollywood – Rose Hill Subdivision, as requested by Columbia Water. Award to Carolina Tap & Bore, Inc. in an amount not to exceed $2,589,785.00, which includes contingency. This firm is located in West Columbia, SC.

Funding Source: Water-Sewer Capital Project Cost (5529999-WM4403-WM4404-658650). The original budget amount for WM4403 was $1,261,597.70 and the original budget amount for WM4404 was $1,563,000.00. The total original budget amount is $2,824,597.70.

This is a Mentor Protégé Program project. Carolina Tap & Bore, Inc. is the Mentor and will be performing water line installation services at 58% ($1,354,350.00) of the total contract value. Carolina Tap & Bore, Inc. is a Local Business Enterprise. LG Utilities is the Protégé and will be performing water line installation services at 21% ($500,000.00) of the total contract value. LG Utilities is a Local Business Enterprise and a Disadvantaged Business Enterprise (Woman) located in Columbia, SC.

The following subcontractor/supplier will be providing additional services/materials:

Fortiline Waterworks of Lexington, SC will be providing materials at 21% ($500,000.00) of the total contract value.

29. Council is asked to approve Change Order One for the Purchase of Polymer for the Metro Wastewater Treatment Plant, as requested by Columbia Water. Award to Polydyne, Inc. in the amount of $100,000.00. This firm is located in Riceboro, GA.

Funding Source: Utilities Metro Wastewater Plt - Chemicals; (5516208-624800). The original budget amount is $219,780.00.

30. Council is asked to approve the purchase of Purate Chemical for the Lake Murray Water Treatment Plant, as requested by Columbia Water. Award to Water Solutions, as a Sole Source, in the amount of $217,282.50. This vendor is located in West Haven, Connecticut.

Funding Source: Utilities Lake Murray Water Plt-Chemicals (5516207-624800). The original budget amount is $217,282.50.

31. Council is asked to approve the purchase of Magnesium Hydroxide for the Metro Wastewater Treatment Plant, as requested by Columbia Water. Award to Premier Magnesia, LLC., as a Sole Source, in the amount of $849,204.00. This vendor is located in Wayne, PA.

Funding Source: Utilities Metro Wastewater Plt - Chemicals (5516208-624800). The original budget amount is $751,872.00. The remainder of the purchase amount is $97,332.00 and will come from Utilities Metro Wastewater Plt-Chemicals (5516208-624800).

32. Council is asked to approve the purchase of Water and Wastewater Chemicals for the Columbia Canal Water Treatment Plant, Lake Murray Water Treatment Plant, and Metro Wastewater Treatment Plant, as requested by the Columbia Water. Award to various vendors in the amount of $ 5,190,101.00.

Funding Source: Utilities Columbia Canal WTP-Chemicals (5516206-624800); Utilities Lake Murray WTP-Chemicals (5516207-624800); Utilities Metro Wastewater Plt - Chemicals (5516208-624800). The original budget amount is $5,699,345.00.

Columbia Canal Water Treatment Plant				
Vendor/Location	**Description**	**Estimated Usage**	**Unit Price**	**Amount To Be Awarded**
Cabot Purification Marshall, TX	Activated Carbon (Powdered)	200 Tons	$1,600.00	$320,000.00
JCI Jones Chemicals Sarasota, FL	Chlorine	341 Tons	$519.00	$176,979.00
Univar USA Inc. Downers Grove, IL	Fluoride/Fluorosilicic Acid/Liquid	190 Tons	$360.00	$68,400.00
Tanner Industries, Inc. Southampton, PA	Anhydrous Ammonia	60 Tons	$1,440.00	$86,400.00
Chemtrade Chemicals US, LLC Parsippany, NJ	Aluminum Sulfate	1,461 Tons	$299.00	$436,839.00
Univar USA Inc. Downers Grove, IL	Sodium Hydroxide/Caustic	250 Tons	$474.00	$118,500.00
Polytec, Inc. Mooresville, NC	Liquid Lime (Calcium Hydroxide)	530 Tons	$320.00	$169,600.00
International Dioxcide North Kingstown, RI	Sodium Chlorite	375 Tons	$1,065.00	$399,375.00
Carus, LLC Peru, IL	Blended Phosphate/ Corrosion Inhibitor	73 Tons	$770.00	$56,210.00
Polydyne, Inc. Riceboro, GA	Liquid Polymer	12 Tons	$2,240.00	$26,880.00
				Total: $1,859,183.00

Lake Murray Water Treatment Plant				
Vendor/Location	**Description**	**Estimated Usage**	**Unit Price**	**Amount To Be Awarded**
Cabot Purification Marshall, TX	Activated Carbon (Powdered)	175 Tons	$1,600.00	$280,000.00
JCI Jones Chemicals Sarasota, FL	Chlorine	320 Tons	$519.00	$166,080.00
Univar USA Inc. Downers Grove, IL	Fluoride/Fluorosilicic Acid/Liquid	200 Tons	$360.00	$72,000.00
Tanner Industries, Inc. Southampton, PA	Anhydrous Ammonia	47 Tons	$1,440.00	$67,680.00
Chemtrade Chemicals US, LLC Parsippany, NJ	Aluminum Sulfate	1,802 Tons	$299.00	$538,798.00
Univar USA Inc. Downers Grove, IL	Sodium Hydroxide/Caustic	225 Tons	$474.00	$106,650.00
Polytec, Inc. Mooresville, NC	Liquid Lime (Calcium Hydroxide)	775 Tons	$320.00	$248,000.00
Carus, LLC Peru, IL	Blended Phosphate/Corrosion Inhibitor	156 Tons	$770.00	$120,120.00
Polydyne, Inc. Riceboro, GA	Liquid Polymer	13 Tons	$2,240.00	$29,120.00
Southern States Chemical, Inc. Savannah, GA	Liquid Sulfuric Acid 78%	321 Tons	$200.00	$64,200.00
				Total:$1,692,648.00

Metro Wastewater Treatment Plant				
Vendor/Location	**Description**	**Estimated Usage**	**Unit Price**	**Amount To Be Awarded**
JCI Jones Chemicals Sarasota, FL	Sodium Hypochlorite, 12%	555,000 Gallons	$0.6000	$333,000.00
JCI Jones Chemicals Sarasota, FL	Sodium Hypochlorite, 15%	555,000 Gallons	$0.6340	$351,870.00
Southern Ionics, Inc. West Point, MS	Sodium Bisulfite	2,450,000 Gallons	$0.0920	$225,400.00
Polydyne, Inc. Riceboro, GA	Liquid Polymer	650,000 Pounds	$1.12	$728,000.00
				Total: $1,638,270.00

33. Ordinance No.: 2019-084 Amending the 1998 Code of Ordinances of the City of Columbia, South Carolina, Chapter 20, Special Fees and Taxes, Article IV, Electronic Payment Fees, Sec. 20-102 Fee(s) imposed

First reading approval was given on October 15, 2019.

34. Resolution No.: R-2019-095 Authorizing consumption of beer and wine only within Boyd Plaza adjacent to the Columbia Museum of Art for the CMA Live on Boyd Plaza on Sunday, December 8, 2019

35. Resolution No.: R-2019-103 Authorizing consumption of beer and wine only at First Thursdays on Main Street

PRESENTATIONS

36. Recognition of Ms. Colleen L. Foster as the November Employee of the Month - Mr. Aubrey Jenkins, Fire Chief.

37. Columbia Empowerment Zone's Excellence in Economic Development Awards - Mr. Russell McCoy, Co-Chair of the Columbia Empowerment Zone Board and Ms. Felicia Maloney, Executive Director of the Columbia Empowerment Zone, Inc.

38. Soda City Certified - Ms. Khali Gallman, Soda City Certified App Creator

ORDINANCES - SECOND READING

39. Ordinance No.: 2019-081 Consenting to the Inclusion of Property in a Multi-County Industrial/Business Park (North Main Senior, LLC, 3700 North Main Street and 3706 North Main Street), Richland County TMS Numbers 09209-20-04 and 09209-20-03

First reading approval was given on October 15, 2019

ORDINANCES - FIRST READING

40. Ordinance No.: 2019-085 Amending the 1998 Code of Ordinances of the City of Columbia, South Carolina, Chapter 11, Licenses, Permits and Miscellaneous Business Regulations, Article II, Contractors, Sec. 11-71, Permit, indemnification and insurance requirements for work affecting streets or other public property to add (e) Outdoor dining encroachments

Commercial Corridor Redevelopment Program action item

41. Ordinance No.: 2019-092 Granting an encroachment to Central Midlands Transit Authority – The COMET for the use of the right of way areas of the 1300 block of Bower Parkway adjacent to 350 Harbison Boulevard, 2300 block of Elmwood Avenue adjacent to 2325 Elmwood Avenue, and 5300 Block of Forest Drive adjacent to 5340 Forest Drive for the installation and maintenance of bus Shelters, Lexington County TMS#002898-01-031, and Richland County TMS#11505-05-01 and 16706-04-09

42. Ordinance No.: 2019-093 Consenting to the Inclusion of Property in a Multi-County Industrial/Business Park (Ballpark, LLC, 17.5 acres, Richland County TMS#11204-02-02, 11204-02-06,11204-02-07 and 11204-02-42)

Commercial Development Incentive Program

43. Ordinance No.: 2019-095 Authorizing the City Manager to sign a lease between the City of Columbia and Columbia Dog Park, a South Carolina Charitable Organization for property located at 127 Humane Lane

44. Ordinance No.: 2019-096 Authorizing the City Manager to execute a Eighth Amendment to Lease between the City of Columbia and Old Boy Properties, LLC for property consisting of 100± acres in Richland County, South Carolina being a portion of the property formerly owned by Columbia Venture, LLC and Sunday School, LLC

45. Ordinance No.: 2019-097 Consenting to the Inclusion of Property in a Multi-County Industrial/Business Park (PDP Bull Street Apartments, LLC, portions of Richland County TMS #R09113-16-03 and TMS R11501-02-01)

    Commercial Development Incentive Program

46. Ordinance No.: 2019-098 amend Sec. 3-352 Definitions, Employer (Conviction-Wage History)

47. Ordinance No.: 2019-099 Amending the 1998 Code of Ordinances of the City of Columbia, South Carolina, Chapter 8, Environmental Health and Sanitation, Article II, Nuisances, Sec. 8-31 Nuisance - Definitions (b) Nuisances affecting public health

48. Ordinance No.: 2019-107 Consenting to the Inclusion of Property in a Multi-County Industrial/Business Park (Huger Hospitality, LLC, portion of Richland County TMS #08912-13-02)

    Commercial Development Incentive Program

49. ANNEXATION, INTERIM COMPREHENSIVE PLAN MAP AMENDMENT, AND INTERIM ZONING MAP AMENDMENT for 118 Woodcreek Ridge Drive; TMS# 25716-02-03

    Ordinance No.: 2019-090 - Annexing 118 Woodcreek Ridge Drive, Richland County TMS# 25716-02-03 into the Plan Columbia Land Use Plan Putting the Pieces Together adopted by Ordinance No.: 2015-014 on February 17, 2015

Council District:	4
Proposal:	Request to annex, assign land use classification of Urban Edge Residential Large Lot (UER-2) and assign zoning of Development District (D-1). The property is currently classified as Neighborhood (Medium Density) and zoned Rural District (RU) by Richland County
Applicant:	Cascata Development, LLC
Staff Recommendation:	Annex, Assign Interim Land Use and Interim Zoning APPROVE
PC Recommendation:	10/07/2019; Assign Interim Land Use and Interim Zoning Approval (7-0)

50. ANNEXATION, INTERIM COMPREHENSIVE PLAN MAP AMENDMENT, AND INTERIM ZONING MAP AMENDMENT for 4.91 acres Woodcreek Farms Road and +/- 0.17 acres W/S Woodcreek Farms Road; TMS# 25800-03-47 and 25800-03-28

Ordinance No.: 2019-088 - Annexing 4.91 acres, Woodcreek Farms Road and 0.17 acres W/S Woodcreek Farms Road, Richland County TMS# 25800-03-47 and 25800-03-28 into the Plan Columbia Land Use Plan Putting the Pieces Together adopted by Ordinance No.: 2015-014 on February 17, 2015

Council District:	4
Proposal:	Request recommendation to annex, assign land use classification of Neighborhood Activity Corridor (AC-1) and assign zoning of Planned Unit Development - Residential District (PUD-R). The property is currently classified as Neighborhood (Medium Density) and zoned PDD by Richland County.
Applicant:	PD Limited, LLC and Woodcreek Development, LLC
Staff Recommendation:	Annex, Assign Interim Land Use and Interim Zoning APPROVE
PC Recommendation:	10/07/2019; Assign Interim Land Use and Interim Zoning Approval (7-0)

RESOLUTIONS

51. Resolution No.: R-2019-094 Adopting City of Columbia Outdoor Dining Encroachment Policy

Commercial Corridor Redevelopment Program action item

52. Resolution No.: R-2019-096 Authorizing the City Manager to execute an Agreement Concerning Electrical Service Rights between Fairfield Electric Cooperative, Tri-County Electric Co-operative and Midland Carolina Electric Cooperative, Inc. and Dominion Energy South Carolina, Inc.

53. Resolution No.: R-2019-097 Authorizing Condemnation for Easement Acquisition for Sanitary Sewer at 4112 West Beltline Boulevard and Brookland Circle to eliminate the Old Food Lion Pump Station; Richland County TMS #11613-13-03, n/f Landers Commercial, LLC; CIP Project #SS7323; CF#250-429 (Easement 5 of 11)

54. Resolution No.: R-2019-098 Authorizing Condemnation for Easement Acquisition for Harlem Heights Storm Drainage Improvements; CIP Project #SD8386; Richland County TMS#14203-14-41, n/f Thomas S. Odom; 1700 Broadland Avenue; Richland County TMS#11714-01-68, n/f Frank C. & Gloria L. Graham; 1700 Carousel Circle; and Richland County TMS#14203-14-38, Catherine Nesbitt; 1712 Broadland Avenue; CF#250-254

55. Resolution No.: R-2019-099 Authorizing the City Manager to execute a Right of Entry between the City of Columbia and The River Alliance for access during surveying and design of Phase II of the Saluda Riverwalk

56. Resolution No.: R-2019-102 Authorizing the City Manager to execute a Sublease Agreement with Celia Saxon Shopping Center, LLC for the lease of Suite 110 and 112 at 2012 Harden Street for the Employee Health Center

57. Resolution No.: R-2019-105 Authorizing the City Manager to execute a Maintenance and Security Agreement between Richland County and the City of Columbia for Gills Creek (Section A) Greenway

APPOINTMENTS

58. Bicycle Pedestrian Advisory Committee

59. Central Midlands Council of Governments

60. Climate Protection Action Committee

61. Design Development Review Commission

62. Municipal Election Commission

63. Parks and Recreation Foundation

64. Property Maintenance Board of Appeals

OTHER MATTERS

65. Council is asked to refer a presentation on the history of Sherwood Forest and the Original Frog Town Community by Mrs. Sonya Hodges to the Arts and Historic Preservation Committee, as requested by The Honorable Moe Baddourah.

66. Council is asked to approve the Proposed Meeting Schedule for 2020.

CONSIDERATION OF MATTERS DISCUSSED DURING THE WORK SESSION

CITY COUNCIL COMMITTEE REPORTS/REFERRALS

APPEARANCE OF THE PUBLIC

ADJOURNMENT

COLUMBIA CITY COUNCIL MEETING MINUTES
TUESDAY, OCTOBER 15, 2019

WORK SESSION - 2:00 P.M.

The Columbia City Council held a Work Session on Tuesday, October 15, 2019 at City Hall, 1737 Main Street, Columbia, South Carolina 29201. The Honorable Mayor Stephen K. Benjamin called the meeting to order at 2:21 p.m. and the following members of Council were present: The Honorable Sam Davis, The Honorable Mayor Pro-Tempore Tameika Isaac Devine, The Honorable Moe Baddourah, The Honorable Howard E. Duvall, Jr., The Honorable Edward H. McDowell, Jr., and The Honorable Daniel J. Rickenmann. Also present were Ms. Teresa Wilson, City Manager and Ms. Erika D. Moore, City Clerk. This meeting was advertised in accordance with the South Carolina Freedom of Information Act.

INVOCATION

The Honorable Edward H. McDowell, Jr. offered the invocation.

EXECUTIVE SESSION

Upon a motion made by Mr. Duvall and seconded by Mr. Davis, Council voted unanimously to enter into Executive Session at 2:22 p.m. for the discussion of **Items 1** through **4** as outlined.

1. Discussion of matters relating to proposed location or expansion of services to encourage location or expansion of industries or other businesses pursuant to S.C. Code §30-4-70(a)(2)

   Vista Depot District

2. Discussion of negotiations incident to proposed contractual arrangements pursuant to S. C. Code §30-4-70(a)(2)

   Municipal Complex

3. Receipt of legal advice related to matters covered by attorney-client privilege pursuant to §30-4-70(a)(2) /

   Municipal Court
   Sewer Expansion Fee
   Grease Trap Requirement
   North East Sewer System Area
   Legal Update 2019

COLUMBIA CITY COUNCIL MEETING MINUTES
TUESDAY, OCTOBER 15, 2019

4. Receipt of legal advice relating to a pending, threatened or potential claim – S.C. Code §30-4-70(a)
Constan Carwash

COUNCIL MEETING - 6:00 P.M.

The Columbia City Council conducted a meeting on Tuesday, October 15, 2019 at City Hall, 1737 Main Street, Columbia, South Carolina 29201. The Honorable Mayor Stephen K. Benjamin called the meeting to order at 6:11 p.m. and the following members of Council were present: The Honorable Tameika Isaac Devine, The Honorable Moe Baddourah, The Honorable Howard E. Duvall, Jr., The Honorable Edward H. McDowell, Jr., and The Honorable Daniel J. Rickenmann. The Honorable Sam Davis was absent. Also present were Ms. Teresa Wilson, City Manager, and Ms. Erika D. Moore, City Clerk. This meeting was advertised in accordance to the South Carolina Freedom of Information Act. The minutes are numbered to coincide with the order of the meeting.

PLEDGE OF ALLEGIANCE

INVOCATION

The Honorable Edward H. McDowell, Jr. offered the invocation.

ADOPTION OF THE AGENDA

Upon a motion made by Mr. McDowell and seconded by Ms. Devine, Council voted unanimously to approve the adoption of the agenda, subject to adding **Item 26** *(Pregnancy and Infant Loss Awareness Month Proclamation)* and deferring the consideration of **Item 27** *(Recognition of Community Partners),* **Item 32** *(Ordinance No.: 2019-083),* and **Item 40** *(Property Maintenance Board of Appeals).*

PUBLIC INPUT RELATED TO ITEMS ON THE AGENDA

Ms. E.K. Hoffman said I would like to express my concerns regarding the proposed spending on 53 Chevy Tahoes and their outfitting for law enforcement use, totaling over 3.3 million tax payer dollars. This allocation of funding is a complete misappropriation of taxpayer money and could be better spent in combatting homelessness in Columbia. The total budget for the Columbia Police Department is over 42 million dollars, whereas the total funds allocated for all homeless services is only one million dollars. We are spending more money today on Tahoes than in three

years of funding for homeless services. We are spending more in enforcing the criminalization of people experiencing homelessness than we are in direct services to combat homelessness. In 2013, our City received national criticism by releasing a plan titled *Homeless Emergency Response* that gave people experiencing homelessness an ultimatum: go to the emergency shelters or be arrested. The City's anti-homelessness legislation and actions continue today with ordinances that criminalize loitering and camping. Criminalizing sleeping, resting, and storing personal property makes the experience of homeless people in public places illegal. These anti-homelessness laws have a real impact on the public's perception of people experiencing homelessness. Several studies indicate that providing public housing and case management services is more effective in solving homelessness while also saving millions of dollars. It is abundantly clear that helping people experiencing homelessness is not a priority for the City.

APPROVAL OF MINUTES

5. Council is asked to approve the August 20, 2019 and September 17, 2019 City Council Meeting Minutes.

Upon a motion made by Mr. McDowell and seconded by Mr. Baddourah, Council voted unanimously to approve the August 20, 2019 and September 17, 2019 City Council Meeting Minutes.

CONSENT AGENDA ITEMS 6 THROUGH 25

Upon a single motion made by Ms. Devine and seconded by Mr. Baddourah, Council voted unanimously to approve the **Consent Agenda Items 6** through **25**.

Councilor Rickenmann said I had people asking about our purchase of Tahoes for police pursuit vehicles. We had an opportunity to take advantage of getting a better quality vehicle at a good price and fully outfitted with new technology; allowing our officers to not only be safer on the road but also allowing them to do their job better. We were able to do this without an increase in the cost for what we have previously spent for sedans. I wanted to make note of this so the public knows what we are doing and how it's going to help our officers.

Ms. Teresa Wilson, City Manager said I would commit to Council that this is the best investment for the Columbia Police Department.

6. Council is asked to approve a Performance Based Professional Services Agreement for Business License Revenue Enhancement Services, as requested by the Business License Division. Award to CBHBC Corp, LLC d/b/a DataMax Corporation. Payment will be based upon non-compliant businesses found. This vendor is located in Winston Salem, NC. – *Approved*

Funding Source: Business License Revenue (1011403-421100).

Council is asked to approve this performance based agreement for the term specified in the contract and a fee of 25% applicable to the initial fees and penalties collected from non-compliant businesses identified by the firm.

7. Council is asked to approve a Professional Services Agreement to Advise, Amplify, and Advocate for Strengthening and Unifying the Arts and History Community. Award to One Columbia for Arts and History in the amount of $83,800.00. This firm is located in Columbia, SC. – *Approved*

Funding Source: Accommodations Tax 5% (2035205-688200). The original budget amount is $83,800.00.

8. Council is asked to approve the installation of new playground features, park renovations, and amenities surrounding Fairwold Park, Lorick Park, and E.B. Sessions Park, as requested by Parks and Recreation. Award to Great Southern Recreation, LLC in an amount not to exceed $476,062.23. This vendor is located in Murfreesboro, TN. We also request Council's approval for the execution of the final agreements in a form approved by the City Attorney's Office with final approval by the City Manager. – *Approved*

Funding Source: Community Block Development Grant - CDBG - (2519999). The original budget amount is $476,062.23.

Funding for these three projects is contingent on the CDBG Action Plan Substantial Amendment which is currently being reviewed for approval. No Purchase Order will be issued and no work is to be done until final approval from Community Development indicating all necessary approvals are in place.

9. Council is asked to approve the purchase of fifty-three (53) 2019 Chevrolet Tahoes Police Pursuit Vehicles for the Columbia Police Department, as requested by Fleet Services. Award to Love Chevrolet, using the South Carolina State Contract in the amount of $1,759,229.00. This vendor is located in Columbia, SC. – *Approved*

Funding Source: Capital Replacement - Auto, Trucks, Heavy Equipment (6308972- 658500). The original budget amount is $1,759,229.00.

10. Council is asked to approve the cost to outfit fifty-three (53) 2019 Chevrolet Tahoes Police Pursuit Vehicles for the Columbia Police Department, as requested by Fleet Services. Award to Love Chevrolet, with customization and outfitting work to be contracted out to West Chatham Warning Devices, using the South Carolina State Contract in the amount of $512,449.05. Love Chevrolet is located in Columbia, SC. West Chatham Warning Devices is located in Lexington, SC. – *Approved*

Funding Source: Capital Replacement - Auto, Trucks, Heavy Equipment (6308972- 658500). The original budget amount is $512,449.05.

11. Council is asked to approve the purchase of In-Car Camera Systems, In-Car Printer Systems, GETAC Computers, Utility Rocket Communications Hardware, and In-Car Radios used in patrol vehicles for the Columbia Police Department, as requested by Fleet Services. Award to various vendors using Cooperative Contracts, GSA Contracts, and the South Carolina State Contract in the amount of $1,045,095.79. – *Approved*

Funding Source: Capital Replacement - Computer Equipment/Hardware (6308972-627500); Capital Replacement - Radio and Electronic Supplies (6308972-623700). The original budget amount is $1,045,095.79.

Vendor	Requisition Number	Equipment	Contract/Cooperative Number	Total Purchase
Coban Technologies	R200895	Edge In-Car Camera System	HGAC Buy # EF04-19	$346,770.72
Insight Public Sector Inc.	R200896	In-Car Printer System	Omnia Partners Cooperative #4400006644	$58,452.96
Synnex Corporation	R200894	GETAC Computers	GSA Contract #GS-35F-0143R	$243,54432
Anixter Inc.	R200897	Utility Rocket Communications Hardware	GSA Contract #GS-07F-6060R	$95,620.54
Motorola Inc.	R200753	In-Car Radios	South Carolina State Contract #4400021163	$300,707.25
			Total IT Equipment	$1,045,095.79

12. Council is asked to approve Construction Change Order #1 for Project WM4388; Water Main Relocation at Murray Lindler Road and Old Lexington Highway, as requested by Columbia Water. Award to Carolina Tap & Bore, Inc. in the amount of $50,132.00. This firm is located in West Columbia, SC. – *Approved*

Funding Source: 552999-WM438801-658650.The original awarded amount is $271,238.00, which includes contingency. The original budget amount for this Change Order is $50,132.00.

This is a Mentor Protégé Program project. Carolina Tap & Bore, Inc. of West Columbia, SC is the Mentor and will provide office and field guidance, purchase materials, and make payment applications at 67.0% ($215,222.98) of the total contract value. Northeast Backflow of Lugoff, SC is the Protégé and will provide materials at 33.0% ($106,147.02) of the total contract value.

13. Council is asked to ratify an Emergency Procurement for repairs to Wilmont Avenue as a result of a 20" watermain break, as requested by Columbia Water. Awarded to North American Pipeline Management, Inc in the amount of $75,588.04. This vendor is located in Marietta, GA. – *Approved*

Funding Source: Engineering Water Sys Improv - Special Projects (5516220- 638500). The original budget amount is $80,775.00.

14. Council is asked to approve a Contract Amendment for Project SS7437; Miscellaneous Lift Station Improvements and Backup Power Additions, as requested by Columbia Water. Award to Michael Baker International in the amount of $135,713.00. This firm is located in Columbia, SC. – *Approved*

Funding Source: 5529999-SS738419-658650. The original budgeted amount for this Amendment is $135,713.00.

This a Clean Water 2020 Program Project and a Mentor Protégé Program Project. Michael Baker International is the Mentor and will provide supervision of the Protégé, review of the project reports generated by the Protégé, and follow up as needed at 63.7% ($285,476.00) of the total contract value. Case Consulting, Inc., a Minority Business Enterprise, of West Columbia, SC is the Protégé and will provide construction reporting and administration services at 20% ($89,552.00) of the contract value.

The following sub-consultants will provide additional services:

Howard Engineering, Inc., of Marietta, SC will provide electrical engineering design services at 11% ($50,500.00) of the contract value.

Steadman Associates, Inc., of Columbia, SC will provide site and topographic surveying at 4.9% ($22,200.00) of contract value.

15. Council is asked to approve a Construction Change Order #1 for Project WM4411/SD8407; Wallace Street Storm Drainage Rehabilitation, as requested by Columbia Water. Award to LAD Corporation in the amount of $201,950.80. This firm is located in Swansea, SC. – *Approved*

Funding Source: 554999-SD840701-658650 and 5529999-WM441101-658650. The original awarded amount is $6,659,599.28, which includes contingency. The original budget amount for this Change Order is $201,950.80.

This is a Mentor Protégé Program project. LAD Corporation of Swansea, SC is the Mentor and will provide stormwater and water line work, flowable fill, and remove/replace asphalt at 75.2% ($5,162,055.08) of the total contract value. Lexington Earthworks of Gaston, SC is the Protégé and will provide stormwater, water line work, and remove/replace asphalt at 18.5% ($1,268,495.00) of the total contract value.

The following sub-consultants will provide additional services:

Ferguson Waterworks, a Local Business Enterprise of Elgin, SC will provide waterline material services at 1.6% ($111,000.00) of the contract value.

Gossett Concrete Pipe of Greenville, SC will provide concrete storm pipe services at 4.7% ($320,000.00) of the contract value.

16. Council is asked to approve a Two (2) Month Contract Extension for Magnesium Hydroxide for the Wastewater Treatment Plant, as requested by Columbia Water. Award to Premier Magnesia, LLC in the amount of $220,000.00. This firm is located in Conshohocken, PA. – *Approved*

Funding Source: Utilities Metro Wastewater Plt - Chemicals (5516208-624800). The original budget amount is $230,000.00.

DRAFT

17. Council is asked to approve an increase to the Indefinite Delivery Contract for Fiscal Year 2019/2020 for Project SS7304; Wastewater Collection System Manhole Survey, as requested by Columbia Water. Award to Hydrostructures, P.A. in an amount not to exceed $569,600.00. This firm has headquarters in Pittsboro, NC and a local office in Cayce, SC. – *Approved*

Funding Source: 5516221-SS730401-638305. The original budget amount for this increase is $569,600.00.
The following sub-consultants will provide additional services:

DESA, Inc., a Minority Business Enterprise of Columbia, SC will provide support manhole inspection tasks at 5% ($28,480.00) of the original contract value.
Construction Support Services, a Minority Business Enterprise of Columbia, SC will provide survey field work at 10% ($60,000.00) of the original contract value.

18. Council is asked to approve a Contract Amendment to the Agreement for the Advanced Metering Infrastructure (AMI) Project, as requested by Columbia Water. Award to Badger Meter in the amount of $5,900,000.00 to add funding for contingencies and for South Carolina State Taxes not provided in the original award. This firm is located in Milwaukee, WI. – *Approved*

Funding Source: 5529999-WM435401-658650. The original budget amount is $45,000,000.00.

A Columbia Disadvantaged Business Enterprise (CDBE) goal of 25% was placed on the total cost of the meter installation $10,679,636.15. Farmer Construction, LLC, a CDBE of Columbia, SC will provide installation services at 17.00% ($1,815,538.15) of the installation service; AOS Contractors, a CDBE of Lexington, SC will provide construction-concrete services for meter installation at 8.28% ($884,273.87) of the installation service, and XtraLight Manufacturing, Ltd., of Raleigh, NC, will also provide installation of water meters, project management of installations, inventory management and control services at 74.72% ($7,979,824). The CDBE goals will not change with this amendment since goals are only applied to meter installation and related services.

DRAFT

19. Council is asked to approve a Contract for Asbestos Abatement, Demolition, Air Monitoring Services, Clearing, Grubbing and Tree Removal Services as requested by Community Development. Award to Corley Construction, LLC, in an amount not to exceed $641,323.95 which includes contingency. This firm is located in Columbia, SC. – *Approved*

This project is funded through a combination of sources to include FEMA Hazard Mitigation Grant Program 75% for all properties, CDBG Disaster Recovery 25% for Demolition and related services only for specific properties; City Flood Recovery 2534330 25% Demolition and related services for specific properties and 25% of tree removal and related services for all properties. The original budget amount was $919,034.00.

Corley Construction, LLC of Columbia, SC is the prime contractor for this project. Corley Construction, LLC is a Minority Business Enterprise (MBE).

The following subcontractors will be providing additional services on this contract:

Blocker Construction, a Minority Business Enterprise (MBE), of Irmo, SC will be performing asbestos abatement at $66,000.00 (11.83%) of the total contract value.

Compliance Center, a Disadvantaged Business Enterprise (DBE) (Woman), of Columbia, SC will be performing project design services at $2,500.00 (0.44%) of the total contract value.

B & B Summitt Engineering of Ft. Mill, SC will be performing air monitoring services at $5,500.00 (0.99%) of the total contract value.

20. Ordinance No.: 2019-073 Amend Sec. 23-143 Water service rates and Sec. 23-149 Sewer service rates (a) and Sec. 23-149 Sewer rates - *First reading approval was given on October 1, 2019 - Approved on second reading.*

21. Ordinance No.: 2019-079 Authorizing the City Manager to execute a Contract of Sale between the City of Columbia and Emma L. Chaplin for the sale of 134 Burton Heights Circle, Richland County TMS #11605-05-43 - *First reading approval was given on October 1, 2019 - Approved on second reading.*

22. Ordinance No.: 2019-082 Authorizing the City Manager to execute a Contract of Sale between the City of Columbia and Zellie Scott for the sale of 100 Gabriel Street, Richland County TMS #14203-11-06 - *First reading approval was given on October 1, 2019 - Approved on second reading.*

23. ANNEXATION, INTERIM COMPREHENSIVE PLAN MAP AMENDMENT, AND INTERIM ZONING MAP AMENDMENT 121 and 141 Sparkleberry Crossing Road; TMS# 25705-07-28 - *First reading approval was given on October 1, 2019 - Approved on second reading.*

Ordinance No.: 2019-077 Annexing 121 Sparkleberry Crossing Road and 141 Sparkleberry Crossing Road, Richland County TMS #25705-07-28 - *First reading approval was given on October 1, 2019 - Approved on second reading.*

Council District:	4
Proposal:	Request to annex, assign interim land use classification of Regional Activity Corridor (AC-3) and assign interim zoning of General Commercial (C-3). The property is currently classified as Mixed Use Corridor and zoned General Commercial (GC) by Richland County.
Applicant:	Arthur State Bank
Staff Recommendation:	Annex, Assign Interim Land Use and Interim Zoning
PC Recommendation:	09/09/2019; Annex, Assign Interim Land Use & Interim Zoning Approval (7-0)

24. ANNEXATION, INTERIM COMPREHENSIVE PLAN MAP AMENDMENT, AND INTERIM ZONING MAP AMENDMENT 4624, 4628, and 4830 Devine Street; TMS# 13810-03-07 - *First reading approval was given on October 1, 2019 - Approved on second reading.*

Ordinance No.: 2019-076 Annexing 4624, 4628, and 4830 Devine Street, Richland County TMS #13810-03-07 - *First reading approval was given on October 1, 2019 - Approved on second reading.*

Council District:	3
Proposal:	Request to annex, assign interim land use classification of Urban Core Community Activity Center (UCAC-2) and assign interim zoning of General Commercial District, -Flood Protective Area (C-3, -FP). The property is currently classified as Mixed Use Corridor and zoned General Commercial (GC) by Richland County.
Applicant:	Palmstar C4 Devine, LLC / CCWC Columbia 1, LLC
Staff Recommendation:	Annex, Assign Interim Land Use and Interim Zoning
PC Recommendation:	09/09/2019; Annex, Assign Interim Land Use & Interim Zoning Approval (7-0)

25. Resolution No.: R-2019-073 Authorizing consumption of beer and wine only at Soda City Market Adoption Day within the Biergarten Area only on Saturday, November 9, 2019 with a rain contingency of Saturday, November 16, 2019 – *Approved*

PRESENTATIONS

26. Pregnancy and Infant Loss Awareness Month Proclamation - The Honorable Tameika Isaac Devine

Councilor Devine said this year marks the fifth year that we are recognizing Pregnancy and Infant Loss Remembrance Month. This month gives an opportunity to parents who have lost a child through pregnancy or as an infant, to remember their children.

Ms. Kristi Bothur, Co-Founder of Naomi's Circle said this is my tenth Infant Loss Remembrance Day. Ten years ago tonight I sat in the living room with a friend and we lit two candles: one for my daughter Naomi, who passed way in my fourth month of pregnancy and one for her baby, who had passed away two months before. Our losses were very different but we grieved together and supported each other. I have learned to do that in the last eight years of having the Naomi's

Circle support group. One of the rules in our meetings is we don't compare and we don't apologize for tears. The babies that I am remembering tonight are the three that I lost around five weeks. They were only five weeks but they had already made an impact on my life. They had already changed my body chemistry and they had a DNA that if they had lived it probably would have resulted in the same curly blonde hair that my living children have. My other baby, Kyria, was eight weeks old with a heartbeat that I had already seen twice. My baby Naomi that I lost at 18 weeks already had toe nails and fingernails that I got to count when she was born sleeping. These are the babies that have impacted my life. One in four pregnancies end in a miscarriage, stillbirth, or infant death. I want to thank you for remembering our babies with us because even though it doesn't change anything, the recognition is part of our healing process. Ten years ago I lit a candle with my friend, last week in our October meeting we lit one hundred candles. Those candles lit up the room even though it was dark. I thank you for standing with us and increasing awareness so it is not so hard to say I lost a baby and say their names.

The Honorable Tameika Isaac Devine and the members of City Council proclaimed October 2019 as National Pregnancy and Infant Loss Remembrance Month in the City of Columbia.

27. Recognition of Community Partners - The Honorable Edward H. McDowell, Jr. – *Deferred*

28. Introduction of Path2Redemption - Mr. Lester Young, Jr., Founder

Councilor McDowell said thank you Lester for all the work you have done in the last few months referencing Ban the Box. Thank you for your energy and all that you give to the City. In particular, our brothers and sisters who find themselves in tough situations. Thank you for your mentorship. There is a special program that is scheduled for next month and I wanted Lester to talk about that.

Mr. Lester Young, Jr., Founder of Path2Redemption said this event that is being hosted on November 7, 2019 at Benedict College is the Second Chance Path and Redemption Reentry Conference. This is a reflection of the leadership that City Council and Mayor Benjamin have taken in creating a Ban the Box City. I wanted to create a conference for the empowerment of men and women who have been impacted by criminal offenses and to also educate their families and the community about the issues we continue to face. Some of these services will address pardoning, expungement applications, Medicaid applications, food stamps applications, housing, and the DMV. We will be providing free clothing and we are also having barbers there. I picked November 7th because every first week of every month individuals are returning home from prison into the community of Columbia, South Carolina. About 486 individuals are transitioning

back into the community and some of them live right here in the City. The conference is to help these individuals connect with resources that are available. We will discuss friendly felony employment opportunities for anyone seeking employment. My intention is to provide lunch for the individuals, as well as a resource booklet I have created for all of the men and women who want to attend this conference. We have to print 150 booklets for the people who are going to attend this conference. We are also hoping to provide meals for these people, so I am asking City Council to assist us with funds to help with these issues. Hopefully we can receive a letter from City Council speaking about Ban the Box ordinance and hopefully some of you can attend this event to speak about the City of Columbia being a second chance City that gives individuals an opportunity for employment and education.

Mayor Benjamin said thank you for the work that you have done using your life experiences to make sure that the City is now a national leader in making sure that all of our citizens have an opportunity to contribute in doing great things. I am getting a lot of feedback from around the country about Ban the Box and the work around wage history. You have been leading the charge and our legal staff is also making sure we are doing it correctly and reflecting it in our procurement policies.

29. Red Ribbon Week - The Honorable Mayor Stephen K. Benjamin

Major Cherby Allen, 81st Readiness Division Substance Abuse Program said as adults, it is our responsibility to promote drug free habits in our schools and our homes. As our brothers' keepers, it is our job to educate our neighbors and our friends on the negative effects of using drugs. As leaders and public servants, it is also our job to promote drug-free examples for our citizens and our communities and for us in the United States Army Reserve.

The Honorable Mayor Stephen K. Benjamin and the members of City Council proclaimed the week of October 23-31 as National Red Ribbon Week in the City of Columbia.

PUBLIC HEARING & ORDINANCE SECOND READING

30. Ordinance No.: 2019-009 - Amending the 1998 Code of Ordinances of the City of Columbia, South Carolina, Chapter 5, Buildings and Building Regulations, Article VI to add Vacant Building Registration - *First reading approval was given on June 4, 2019 - Approved on second reading.*

Mr. David Hatcher, Housing Official for the Code Enforcement Division said since the June 4, 2019 council meeting, I had the opportunity to meet with several stakeholders, business organizations, and citizens of Columbia. The ordinance in front of you today encompasses the feedback we obtained from those meetings. Obviously we can't address everything but I feel confident that it addresses the majority and still meets the needs of the Code Enforcement Division. The biggest amendment has been the fee structure. We broke it down between residential and non-residential. Now there is a different fee structure depending on the property. The other concern was that the City was trying to take away people's property. That is not the case. The first ordinance had a reference to eminent domain but that was for severe cases. Since then, we have completely taken out that language to specify that is not the City's intent. Another issue brought up was financial concerns if owners could not afford to pay the registration fee or to fix their property. We added an exception for financial hardships.

Councilor Devine said if someone does the financial hardship and we have verified that there is a financial hardship, is there an ability for them to participate in the MAP program. The program is not for vacant properties. Could we look into that?

Mr. David Hatcher, Housing Official for the Code Enforcement Division said my intent is to follow the financial hardship guidelines that Community Development uses to determine the median income guidelines.

Ms. Gloria Saeed, Community Development Director said we can look at different ways to modify or upgrade the program to assist with this issue.

Councilor McDowell said it would help considerably if the fees collected, could be used in addition to the MAP program to help rehab some of the properties. Those fees could be placed in an account where residents can get access to some of the money that's totally separate from the operational budget. I want to make a proposal to the fellow Council to see if that could be done.

Councilor Baddourah asked when the program will start to be implemented. Will you be starting right away or will you send notice letters?

Mr. David Hatcher, Housing Official for the Code Enforcement Division said the proposal is to be effective immediately. By definition in the ordinance, the building is not vacant until after it is vacant for 120 days after the ordinance is in place. We have 120 days to get all the paperwork together. What we intend to do is take all the buildings that we think are vacant and send them letters notifying them that the ordinance has passed and that it might affect them.

COLUMBIA CITY COUNCIL MEETING MINUTES
TUESDAY, OCTOBER 15, 2019

Council opened the public hearing at 6:52 p.m.

Ms. Catherine Bruce, Resident of Historic Waverly said we raised concerns since the last reading and had the opportunity to talk to other community folks. We examined each version of the ordinance that came out and had community discussion. We had a meeting with Mr. Hatcher and a second meeting also with Mr. Hatcher and Mr. McDowell. One of the things that are still concerning and make me ask you to say no to this ordinance is the criminalization of all vacant buildings. A vacant building that is not violating any code is still going to be subject to being on the list and being examined, possibly not in an equal fashion with other folks. We did discuss the number of buildings that are vacant and we know who the owners are. We may or may not have equal enforcement of the requirements. We still have a $500 violation fee if you do not file and a $500 violation fee if you do not create a plan. To make a plan you have to make sure you have adequate engineering and architecture and an understating of zones and codes. That will cost money. If the ordinance is passed, I think we want to have money on the front end; possibly using money from the MAP program, but that is not in the ordinance. We also have the possibility of whether or not people are able to follow these rules. There is a state law that mentions municipalities still have the power to remove properties from individuals even if you remove the eminent domain language from the ordinance. This will create an extension of the racial gap. We want people to keep their properties in their families. Let's figure out how to do it without the possible impact of buildings being removed from individuals and by providing the opportunity to develop their properties. I think we should slow down and come up with something adequate to provide African American and low income individuals the opportunity to participate in developing these properties. My request is to say no to the ordinance.

Ms. April Jones, Resident of Pinehurst Neighborhood said I am here today because I am opposing this ordinance. I have had a direct and personal relationship with code enforcement. I have found that they are not enforcing the law and the codes that are already on the book. When myself, my mother or other people in the community ask for a house to be boarded up they do nothing. Weeks go by and the house is not boarded up. They are not handling the issues that are occurring. There is a green duplex on Schoolhouse Road. It has been declared a nuisance. Legally the City of Columbia has to shut it down for six months and nothing has been done. This is under the purview of code enforcement. They are not following the law; they are not following the codes. This gives us second thoughts on this ordinance. I have talked to people in the community and business leaders throughout the City. Every single person that I have spoken to has said no, this is not the ordinance for the City of Columbia. We are a capital city and we are trying to bring businesses, young people, and people from other parts of the country and this is going to be negative to our city. This is what experts have told me. The tax burden is too high on the everyday person. About 30% of our city is paying taxes and the other 70% is not because

they are nonprofits, schools, or colleges. This is not sustainable and this is not going to push our city forward but instead push us back.

Ms. Rebecca Parms, Resident of Pinehurst Neighborhood said I oppose this ordinance with all my heart and strength. We asked many people to come but they are afraid to come and speak before you because of the rudeness that has been exhibited. We the people of Columbia are tax payers, law abiding, and loyal to Columbia but I feel this ordinance is not loyal to us. Mr. Hatcher indicated that he spoke to several citizens, that is not sufficient. No one asked him specifically how many and where did the citizens live, age, or race. It appears to me that this is something that has not been seriously considered as far as the impact upon ordinary citizens who struggle every day to pay bills, put food on the table, pay rent, pay the car note, work, pay for child support, and child care. We need to move Columbia, SC forward and be inclusive of all people. I had contact with code enforcement. I have found the officers to be rude and liars. They are not transparent and don't follow-up on calls previously made about tall grass and drug dealers in vacant houses. I have met with Mr. Hatcher and Mr. O'Neil many times. Mr. Hatcher was not transparent. The six units on the corner of Schoolhouse Road and Center Street by law have been declared a nuisance and by law the owner has to shut down the place for six months. The owner did not have a permit for two years and he pled guilty in criminal court. The Police chief, Mr. Hatcher, and Captain Roberts told me that they are not shutting the six units down. That lets me know that code enforcement is not interested in doing their job, shutting down drug houses and making sure everyone abides by the law. They do backroom deals and let criminal landlords continue to rent to people who do not have jobs, are drug dealers, and prostitutes. The Chief promised me that he was going to shut the place down and now he is saying he is not going to shut it down. He is violating the law and I am very angry.

Council closed the public hearing at 7:04 p.m.

Mayor Benjamin said thank you David for the hard work. We have to make sure that as we execute the ordinance we do it with a focus on equity and making sure we use creative approaches like Ms. Devine asked Ms. Saeed about.

Upon a motion made by Mayor Benjamin and seconded by Mr. Baddourah, Council voted unanimously to give second reading approval to Ordinance No.: 2019-009 - Amending the 1998 Code of Ordinances of the City of Columbia, South Carolina, Chapter 5, Buildings and Building Regulations, Article VI to add Vacant Building Registration.

COLUMBIA CITY COUNCIL MEETING MINUTES
TUESDAY, OCTOBER 15, 2019

ORDINANCES - FIRST READING

31. Ordinance No.: 2019-081 Consenting to the Inclusion of Property in a Multi-County Industrial/Business Park (North Main Senior, LLC, 3700 North Main Street and 3706 North Main Street), Richland County TMS Numbers 09209-20-04 and 09209-20-03 – *Approved on first reading.*

Upon a motion made by Mr. McDowell and seconded by Mr. Duvall, Council voted [5 to 1] to give first reading approval to Ordinance No.: 2019-081 Consenting to the Inclusion of Property in a Multi-County Industrial/Business Park (North Main Senior, LLC, 3700 North Main Street and 3706 North Main Street), Richland County TMS Numbers 09209-20-04 and 09209-20-03. Voting aye were Mr. McDowell, Mr. Duvall, Mr. Baddourah, Ms. Devine, and Mayor Benjamin. Mr. Rickenmann voted nay.

32. Ordinance No.: 2019-083 Amending the 1998 Code of Ordinances of the City of Columbia, South Carolina, Chapter 23, Utilities and Engineering, Article V, Water and Sewer Rates, Sec. 23-154 Extended payment option – *Deferred*

33. Ordinance No.: 2019-084 Amending the 1998 Code of Ordinances of the City of Columbia, South Carolina, Chapter 20, Special Fees and Taxes, Article IV, Electronic Payment Fees, Sec. 20-102 Fee(s) imposed - *Approved on first reading.*

Upon a motion made by Mr. Devine and seconded by Mr. Duvall, Council voted unanimously to give first reading approval to Ordinance No.: 2019-084 Amending the 1998 Code of Ordinances of the City of Columbia, South Carolina, Chapter 20, Special Fees and Taxes, Article IV, Electronic Payment Fees, Sec. 20-102 Fee(s) imposed.

RESOLUTIONS

34. Resolution No.: R-2019-093 Authorizing the City Manager to execute a Fifth Lease Amendment between the City of Columbia and First-Citizens Bank & Trust Company for lease of approximately 34, 221 square feet of 1225 Lady Street – *Approved*

Upon a motion made by Mayor Benjamin and seconded by Ms. Devine, Council voted unanimously to approve Resolution No.: R-2019-093 Authorizing the City Manager to execute a Fifth Lease Amendment between the City of Columbia and First-Citizens Bank & Trust Company for lease of approximately 34, 221 square feet of 1225 Lady Street.

COLUMBIA CITY COUNCIL MEETING MINUTES
TUESDAY, OCTOBER 15, 2019

OTHER MATTERS

35. Accommodations Tax Surplus - Ms. Dee Dee Fanning, Grants Coordinator/Community Projects Liaison

Mayor Benjamin said I move that we direct a portion of the surplus accommodations tax for the CVB towards the completion of the wayfinding project. The request was made to City Council in the Spring of 2019 for a cost share between the City and the CVB for the project gap.

Councilor Duvall asked Mayor Benjamin if the surplus will be split 85/15 like the initial distribution and if the CVB will take the $100,000 out of their share of the 85%?

Mayor Benjamin replied yes.

Upon a motion made by Mayor Benjamin and seconded by Ms. Devine, Council voted unanimously to direct a portion of the surplus accommodations tax for the CVB towards the completion of the wayfinding project.

36. Council is asked to approve the Installation of one (1) Speed Hump on Bryan Street, as requested by the Public Works Department.

Upon a motion made by Mr. McDowell and seconded by Mr. Duvall, Council voted unanimously to approve the Installation of one (1) Speed Hump on Bryan Street, as requested by the Public Works Department.

APPOINTMENTS

37. Central Midlands Council of Governments – *Deferred*

38. Climate Protection Action Committee

Upon a motion made by Mayor Benjamin and seconded by Ms. Devine, Council voted unanimously to approve the reappointment of Deborah Stirling and the appointment of Zachary Laprise and Mary Cothran to the Climate Protection Action Committee.

39. Municipal Election Commission

Upon a motion made by Mayor Benjamin and seconded by Ms. Devine, Council voted unanimously to approve the appointment of Tyler Bailey, Esq. to the Municipal Election Commission.

40. Property Maintenance Board of Appeals – *Deferred*

CONSIDERATION OF MATTERS DISCUSSED DURING THE WORK SESSION

No matters were considered at this time.

CITY COUNCIL COMMITTEE REPORTS/REFERRALS

No reports or referrals were made at this time.

APPEARANCE OF THE PUBLIC

Ms. Kate Bowie said prioritizing people over profit comes down to matters of empathy, dignity, and respect. Out of sight and out of mind does not solve the problem that there are people without shelter in our city. Criminalizing homelessness further ostracizes and dehumanizes folks experiencing homelessness and expands class stratification based on access to capital. The proposal of replacing the benches in the Vista with benches with dividers is an example of hostile architecture. This trend in urban design discourages the use of public spaces by already marginalized people and denies them access to public spaces, which we all have the right to regardless of socioeconomic status. Having dividers in the benches sends the message to both homeless folks and disabled folks alike of not being welcome. To increase the capacity and power of the police perpetuates the cycle of poverty. Criminalization of homelessness has proven to be ineffective. Misuse of police power to arrest people experiencing homelessness is a temporary intervention that only prolongs homelessness. These people are arrested and incarcerated and often cannot make bail. They are returned to the streets still with nowhere to go but now with possible criminal convictions. These convictions, no matter how minor, create even more barriers to obtaining critical public benefits, employment, and housing. Even though we have passed Ban the Box, this does not make them able to leave this state without taking these criminal convictions with them. Today, I ask that you halt all anti-homelessness actions and the enforcement of harmful ordinances. I ask that you return the benches without dividers to the Vista and remove all existing hostile architecture from the City, especially the benches with dividers at the bus stops. I ask for the creation of a paid advisory board with people currently

experiencing or formerly experienced homelessness to guide this Council in their decision making regarding the homeless population. Lastly, we ask that Council take an intersectional approach to understand the plight of all marginalized communities, especially that of people experiencing homelessness and enact measures to further the training of city employees, specially the police, on compassion and inclusivity.

Ms. Effy Francis said I am concerned about the approval of the City's purchase of 53 Chevy Tahoes for the Police Department. I feel that this tax-payer money can be more properly put towards our community through homeless support services. Mayor Benjamin, I know that in the State of the City Address you stated the importance of celebrating diversity, promoting inclusivity, and challenging biases by protecting free speech and other constitutional rights. You mentioned that we should have compassion and empathy for those who have been mistreated and disenfranchised. Councilman Duvall, I know that you have expressed that the reduction and available mental health services is a huge factor in the issue of homelessness in our City and we need to work in a coordinated way to address them. Anti-homelessness is ableist, meaning that it is discriminatory towards disabled people. Even Transitions, the organization with the most resources and capacity to serve people experiencing homelessness, has a restriction in their eligibility. To receive a bed, clients must be able to perform all activities of daily living without assistance. This is one example of ableism in homeless service in Columbia. Additionally, the removal of the benches in the Vista is incredibly ableist towards people experiencing homelessness. Benches are for people to be able to rest. Especially in an area like the Vista where parking is not ample and not always close to the destination. According to the guidelines from the American Disabilities Act, benches are an important accommodation for disabled people. Benches with dividers makes it difficult to use for people with wheelchairs and also causes issues with people who are visually disabled. The fact that millions of dollars are being spent on police vehicles is largely a misappropriation of tax payers' money. Increasing the resources of the police contributes to the enforcement of the criminalization of people experiencing homelessness. Homeless people are a vulnerable population, 40% of which are disabled. I encourage this Council to not continue to approve the spending on police power and instead invest this money in serving our most marginalized.

Mr. John White said when it comes to spending lots of money on police and how that is related to homelessness is something not really being discussed here. Police and homelessness have direct correlations to each other. For example, I have been homeless before. I was homeless three different times. I could not pay traffic tickets. I had to choose between losing my job as a delivery driver or pay the ticket to keep my license but lose my house and try to live out of my car without losing my job. When we are talking about amping up the police budget and how much money they have, we are talking about how every aspect of homelessness is criminalized.

This gives the police the ability to create more homelessness. I imagine there is not a shortage of police cars, but there is a massive shortage of funding for homeless people. You spend 48 times more money on the police and today three times more is being spent on buying 2019 cars, which is not necessary. There is no need for a 2019 car to be driven around. That is three years of homeless funds. If you work paycheck to paycheck you could be there too. Anything can happen if you don't have a support system. The police and homelessness are directly connected issues.

Mayor Benjamin said there were several valid points that some of you raised and I don't want you to think that you were given a short shrift. One of the most important goals of the City is to be a place where people can work, play, and be safe. Public Safety is a priority of the City. I would encourage you all to get involved in some of the things happening in the City. I believe that your voices can add significant value to our policy making, our programs, and funding. Some of the work we have been doing is not just diversity focused. We have been pushing to make sure that our values around equity are inculcated in our policymaking and our laws. We have been setting the pace. Ban the Box is not just about a philosophical idea, we are fundamentally changing the way we do business and dispense public funds. There is a lot more that needs to be done to address homeless services by the City but also by all of our multiple partners that we work with. We are doing so much more around affordable housing and low-income housing. I would encourage you to add your voices to the chorus in solving some of these problems that are complex. There is intersectionality between a number of the issues you raised but challenges that have been taking years to create can sometimes take a while and some thoughtful policy solutions to also fix. When you come, come with the passion and even the ferocity and anger as well, but always in the spirit of civility. We are here working on behalf of the people. This is your chamber.

Mayor Benjamin left the meeting at 7:20 p.m.

Mr. Maurice Koger was present to receive recognition on services provided by his business towards the Breast Cancer Campaign.

Councilor Duvall said there is a misconception that has been mentioned. The benches were not removed; they were moved about 100 feet up the hill. They are now on the corner of Washington and Lincoln streets, instead of the corner of Lady and Lincoln streets. There are still the same number of benches; they just have been moved up the hill.

Katie Bowie said in a recent article by WLTX, they interviewed you saying that the benches were moved to the police station. Moving them is removing them from the public space. I have personally spoken to you on the phone numerous times and you have suggested the bench with

dividers. We are here today to tell you that is not acceptable. All of us are very passionate. We researched this and stayed up all night to prepare to speak in front of you today. The benches should have never been removed and should be moved back.

Councilor Devine echoed what Mayor Benjamin said. There are probably a lot of things that we are doing and you aren't aware of. We have a Homeless Court that has been nationally recognized because we are moving individuals from homelessness to jobs and housing. Every year we have a work session on homelessness and we talk about all the things we are doing and take ideas on what else we can do. I would encourage you to stay engage and continue to communicate with us.

Ms. E.K. Hoffman reiterated her previous concerns about funding for the Police Department, the funding given to homeless services in Columbia, and the anti-homeless ordinances.

Councilor Rickenmann said the budget for the Police Department has already been passed. What we did tonight was appropriate the money that was already in the budget. We did not add money to the police. This was budgeted and we went through the public hearing process to do that. There are 67 homeless providers in our community and we work with most of them. We fund a whole lot of different programs in the City and we have worked with everybody from Fast Forward, who has provided training for over 20 years, to others. There is a lot going on. That doesn't mean we have all the answers and that we are finished. It's a community wide issue. You mentioned several times anti-homelessness. I think it would be helpful for us to know what you believe those ordinances are and let's have a discussion about it. We are all open to it.

Ms. Teresa Wilson, City Manager said for the benefit of the public I am willing to do a reeducation on the budget. We can have those conversations about specific amounts of money and how things are allocated. The money for police vehicles and other public infrastructure needs in our city comes from capital leasing. That is not something you can legally use to fund homelessness. It is a one-time fund. I would like to remind you that this Council has taken leadership over many years, over a million dollars every single year of reoccurring funds, towards homelessness. If we do the math, there has been much more spent in homelessness than on a one-time funding need for the public safety of our city. I am happy to talk about how the budget really works. There is a big difference on how we fund what is being referenced versus the general fund, which includes tax payers' dollars and has gone to homeless needs for many years.

COLUMBIA CITY COUNCIL MEETING MINUTES
TUESDAY, OCTOBER 15, 2019

ADJOURNMENT

Upon a motion made by Mr. McDowell and seconded by Mr. Duvall, Council voted unanimously to adjourn the meeting at 7:30 p.m.

Respectfully submitted by:

Erika D. Moore, CMC
City Clerk

DRAFT

COLUMBIA CITY COUNCIL MEETING MINUTES
TUESDAY, OCTOBER 1, 2019

WORK SESSION - 2:00 P.M.

The Columbia City Council held a Work Session on Tuesday, October 1, 2019 at City Hall, 1737 Main Street, Columbia, South Carolina 29201. The Honorable Mayor Stephen K. Benjamin called the meeting to order at 2:10 p.m. and the following members of Council were present: The Honorable Sam Davis, The Honorable Moe Baddourah, The Honorable Howard E. Duvall, Jr., The Honorable Edward H. McDowell, Jr., and The Honorable Daniel J. Rickenmann. The Honorable Mayor Pro-Tempore Tameika Isaac Devine was absent. Also present were Ms. Teresa Wilson, City Manager and Ms. Erika D. Moore, City Clerk. This meeting was advertised in accordance with the South Carolina Freedom of Information Act.

INVOCATION

The Honorable Edward H. McDowell, Jr. offered the invocation.

CITY COUNCIL DISCUSSION

1. Municipal Election Update - Mr. Terry Graham, Interim Director of Elections for Richland County

Mr. Terry Graham, Interim Director of the Richland County Elections and Voter Registration Office said we have an election coming up on November 5, 2019. Absentee voting will open on Monday, October 7, 2019 at 8:30 a.m. until 5:00 p.m. We will be open on Saturday, October 5, 2019 for voter registration from 9:00 a.m. until 1:00 p.m. My staff members, Mr. Jessie Hinson and Mr. Barry Wells, are going to give you a demonstration on the new Express Vote system and the DS 200 printer.

Mr. Jesse Hinson, Richland County Elections and Voter Registration presented South Carolina's new Express Vote voting system. It is made by Election Systems and Software. It is called a ballot marking device and it is a touch screen device. At the precinct, you will be given a ballot card that you will insert into the machine. You will make your selections and review your selections on the screen. Then you will hit print card and review your selections on the card. This machine stores no data. You will run your printed card through the DS 200 where all of the data is stored. Ballots are still anonymous. This is more secure, because we have a paper trail for audits now.

Ms. Teresa Wilson, City Manager inquired about the chain of custody for marked ballots that have not been cast.

DRAFT

Mr. Jesse Hinson, Richland County Elections and Voter Registration explained that the ballot will go from the poll worker to the voter and then into the machine. The voter will take it out of the machine once it has been printed and then insert [the ballot] into the scanner.

Mr. Terry Graham, Interim Director of the Richland County Elections and Voter Registration Office clarified that the concept of the precinct has not changed. You will show your ID at the poll table, they will verify your identity and you will take the paper they give you to the express vote machine. Next, you will insert it, make your selection, print the ballot and then insert your marked ballot into scanner. Your ballot has been cast at that time.

Councilor Baddourah asked what happens if the voter makes a mistake.

Mr. Terry Graham, Interim Director of the Richland County Elections and Voter Registration Office said we can give them another white piece of paper and they can vote again. The second one will be scanned. The first ballot will be marked as void and placed in another secure container. They are all being accounted for. A poll worker is going to walk you from the check-in table to the Express Vote. From the Express Vote, someone will take you to the DS 200. After you cast your ballot, they will watch you exit without your ballot. The only thing that changed about our voting process is the equipment. The process is still the same.

Councilor Baddourah said my only concern is that this has not been communicated with the public and we are only a month away. That is not good at all. The other concern is with senior citizens who are used to one system.

Ms. Teresa Wilson, City Manager asked if there is a possibility to share the steps on a quarter sheet of paper. The only thing is making sure people go through every single step and we need to push that.

Councilor Rickenmann said we need to get it out on social media. We need a 15-second video.

Mr. Terry Graham, Interim Director of the Richland County Elections and Voter Registration Office said the State rolled it out and we have to go in the direction of the State. We are not doing this on our own.

Ms. Erika Moore, City Clerk said we went over last week and met with Mr. Graham. We tested the machines and I asked that he make this presentation to City Council. We can reach out to the State Election Commission to see what marketing materials they have and we will work together to push that information out to voters.

DRAFT

Mr. Terry Graham, Interim Director of the Richland County Elections and Voter Registration Office said even though we are busy, we are willing to come to a forum before the election.

Ms. Teresa Wilson, City Manager said the Columbia Council of Neighborhoods is a good avenue. Ms. Utsey can work with you. I am sensing the concern of Council. Having information ahead of time and on Election Day is going to be key.

Councilor McDowell said the issue is that a lot of constituents are used to the regular voting procedures and now we have a three step process. The more publicity we can get out relative to the steps to vote, the easier it will be for folks, especially seniors.

Mr. Jesse Hinson, Richland County Elections and Voter Registration continued to explain that once the ballot is scanned, it is dropped into a secure box that will be removed at the end of the night and returned to our office. An image of every ballot is stored on a USB. The machine tracks the number of ballots that are ran through it. They will have a zero tape and a totals tape like the old machines.

Mayor Benjamin asked Mr. Graham to summarize the policy reasons for the change.

Mr. Terry Graham, Interim Director of the Richland County Elections and Voter Registration Office said it is for integrity and efficiency. For years, voters have wanted a paper trail. This is something that the State has been wanting for years. The Delegation provided funding this year. All 46 counties have the voting machines now. We were supposed to have the system in September, but we just received the system last week, did the acceptance test, and received approval to use it.

Mayor Benjamin said in addition to using Channel 2, can we make sure we connect them with CCN. I do not think we will have the organic requests. We may need to make the request on behalf of neighborhood presidents and get it out to as many organizations as possible, particularly senior facilities in the City. We need to present to critical masses of people.

2. Model Business License Ordinance - Ms. Melissa Harrill, Research and Legislative Liaison for the Municipal Association of South Carolina

Ms. Melissa Harrill, Research and Legislative Liaison for the Municipal Association of South Carolina said I was asked to explain what the model business ordinance is. Back in the early 70s, a CPA and an attorney created the two components that make up the model business license ordinance. Upon their retirement in 2007, it was given to MASC. This ordinance has been tested

three times by the Supreme Court and it has been upheld as being a fair and rational methodology. In the ordinance, like businesses are treated the same. There are three parts: the local legislation, the rate schedule, and the class schedule. You have to adopt the model ordinance and stay current with the class schedule. The class schedule has to be updated every two to five years, because that is what keeps it fair and equitable. The class schedule is divided into seven classes based off of IRS statistics of profitability by industry. We take statistics from the IRS that are based off of the classification numbers, their income data, and the profit margins and put them into classes one through seven. There is an eighth class as a catchall class for businesses that are statutorily carved out or for various reasons they need to be addressed in a different manner. Those are usually unique to the city or to the area in which the city resides. It is imperative that you either go towards this model or find a methodology that you can defend because it takes any legal liability off of your shoulders as a Council. You have to update the class schedule, because you have an ebb and flow of businesses. I do all of the research for our legislative initiatives and I also lobby on behalf of all cities and towns on tax law related matters. Several House representatives in our area are supporting House bill 4431. This is a frightening bill for cities and towns for multiple reasons. The two largest local government payments are business license tax and property tax. The Legislature has not found a way to control property tax payments. The way to assist businesses with lowering their local government liability is the business license tax. It is an easy one, because it does not cost them anything. The bill was dropped at the end of the year. There have not been any hearings. I am here today to implore you to go towards the standardization initiative that MASC has been pushing. We produced a rack card for anyone who needs to be educated on the business license tax. It is hard for businesses that go across multiple jurisdictional lines with different due dates; different twelve months for their gross income to be calculated; different forms; and different definitions of gross income. All of this makes it very complicated. Imagine if we could make us more business friendly across all our cities, towns, and counties. Consistency is one of the tenets of this bill. There are some very negative things in this bill. It transfers all authority to the secretary of state and takes it away from you. They would carve out transportation folks [located] in and out of the city and have a different methodology. One of the biggest problems is their switch from gross [income] to net [income].

Mayor Benjamin said we have been talking about adopting the model business ordinance for a while. Our numbers show that we are going to be generally revenue neutral. In the interest of transparency, there will be some winners and losers. What are you hearing from other communities as to which NAICS codes might be most effective?

DRAFT

Ms. Melissa Harrill, Research and Legislative Liaison for the Municipal Association of South Carolina said Greenville is not on the model ordinance. I am working with them now. I cannot answer your question unilaterally until I look at your data, because every city is different.

Councilor Davis asked for additional examples.

Ms. Melissa Harrill, Research and Legislative Liaison for the Municipal Association of South Carolina said your current model is on a different methodology. Your staff will be briefed on that in the next few weeks.

Councilor Duvall said for every loser there is a winner. It will balance out. If you make it revenue neutral, a lot of people will be paying less and some people will be paying more. You are coming up with a legally justifiable situation that has been defended in court.

Councilor Baddourah asked for an example of winners and losers, as well.

Ms. Melissa Harrill, Research and Legislative Liaison for the Municipal Association of South Carolina said the court has upheld that things have to be done equally among all businesses. You have different declining rates and different levels where the base rate is applied. Those kinds of things will change the winners' and losers' dynamics as well.

Mayor Benjamin said this has been a part of our discussion and I want to be fully transparent; this is not going to be a fun process for anyone.

Councilor Baddourah asked if small businesses will get a break at all.

Ms. Melissa Harrill, Research and Legislative Liaison for the Municipal Association of South Carolina said they will be treated equally within their industry.

Councilor Davis asked if the model includes religious organizations and nonprofits.

Ms. Melissa Harrill, Research and Legislative Liaison for the Municipal Association of South Carolina said it is a local decision to include them. The political reality is that the more of these standardization components you can adopt, the more wind you will take out of the argument that it needs to be done to us. Let us clean up our own house in the way it needs to be cleaned.

DRAFT

Councilor Rickenmann said it is interesting that the State caps railroads so that we only get a couple thousand dollars, yet they want to control the others. It is a very interesting dynamic. They are affecting the same constituencies.

Councilor Duvall said it is not taking away their revenue.

Mayor Benjamin said to City Manager Wilson, we need to register our displeasure with H4431, the delegation, and the sponsors.

Ms. Melissa Harrill, Research and Legislative Liaison for the Municipal Association of South Carolina said you also have a proviso in your packet that was passed in this past year's budget. It is also worrisome. A study committee has been formed. Do stay in touch with your delegation and make sure they understand the importance of this revenue source.

EXECUTIVE SESSION

Upon a motion made by Mr. Duvall and seconded by Mr. McDowell, Council voted unanimously to enter into Executive Session at 3:07 p.m. for the discussion of **Items 3** through **6** as outlined.

3. Receipt of legal advice related to a pending, threatened or potential claim pursuant to S.C. Code §30-4-070(a)(2)

    - *R-2019-089 opioid class action lawsuit*

4. Discussion of negotiations incident to proposed contractual arrangements pursuant to S. C. Code §30-4-70(a)(2)

    - *Storm water easements*

5. Receipt of legal advice related to matters covered by attorney-client privilege pursuant to S.C. Code §30-4-70(a)(2)

    - *Ordinance No.: 2019-074 Amend Chapter 11, Article II Business and Professional Licenses*
    - *Joiner Road*

DRAFT

6. Discussion of the employment of an employee pursuant to §30-4-70(a)(1)

- *Business Liaison*
- *Development Corporations*
- *Municipal Court*

COUNCIL MEETING - 6:00 P.M.

The Columbia City Council conducted a meeting on Tuesday, October 1, 2019 at City Hall, 1737 Main Street, Columbia, South Carolina 29201. The Honorable Mayor Stephen K. Benjamin called the meeting to order at 6:12 p.m. and the following members of Council were present: The Honorable Sam Davis, The Honorable Moe Baddourah, The Honorable Howard E. Duvall, Jr., The Honorable Edward H. McDowell, Jr., and The Honorable Daniel J. Rickenmann. The Honorable Mayor Pro-Tempore Tameika Isaac Devine was absent. Also present were Ms. Teresa Wilson, City Manager and Ms. Erika D. Moore, City Clerk. This meeting was advertised in accordance with the South Carolina Freedom of Information Act. The minutes are numbered to coincide with the order of the meeting.

PLEDGE OF ALLEGIANCE

INVOCATION

The Honorable Edward H. McDowell, Jr. offered the invocation.

ADOPTION OF THE AGENDA

Upon a motion made by Mayor Benjamin and seconded by Mr. Davis, Council voted unanimously to approve the adoption of the agenda, subject to moving **Item 28** *(Resolution No.: R-2019-091 Approving the Honorary naming of the 100, 200, 300, 400, 500 and 600 blocks of Juniper Street between David Street and Farrow Road "Emily England Clyburn Way")* to the top of the agenda and deferring the consideration of **Item 41** *(Ordinance No.: 2019-081 Consenting to the Inclusion of Property in a Multi-County Industrial/Business Park (North Main Senior, LLC, 3700 North Main Street and 3706 North Main Street, Richland County TMS Numbers 09209-20-04 and 09209-20-03).*

PUBLIC INPUT RELATED TO ITEMS ON THE AGENDA

No one appeared at this time.

COLUMBIA CITY COUNCIL MEETING MINUTES
TUESDAY, OCTOBER 1, 2019

CONSENT AGENDA ITEMS 7 THROUGH 27

Upon a single motion made by Mr. McDowell and seconded by Mr. Baddourah, Council voted unanimously to approve the **Consent Agenda Items 7** through **27**.

7. Council is asked to approve an Economic Development Grant Agreement for the creation of new local technology jobs, as requested by the Economic Development Department. Award to Krumware, LLC in an amount not to exceed $50,000.00. This firm is located in Columbia, SC. – *Approved*

   Funding Source: ED Special Allocation (5511301-638508). The original budgeted amount is $50,000.00.

8. Council is asked to approve the renewal of Kronos Support Services for software maintenance, as requested by the Human Resources Department. Award to Kronos Incorporated in the amount of $81,340.52. This vendor is located in Chelmsford, MA. – *Approved*

   Funding Source: Program Management Office- Maintenance and Service Contract (6218950- 638200). The original budget amount is $81,340.52.

9. Council is asked to approve the renewal of Kronos Workforce Subscription Services for employee time keeping, as requested by the Human Resources Department. Award to Kronos Incorporated in the amount of $120,942.20. This vendor is located in Chelmsford, MA. – *Approved*

   Funding Source: Program Management Office- Software License (6218950- 627510). The original budget amount is $120,948.12.

10. Council is asked to approve a Construction Change Order #1 Final for Emergency Project WM4479; New 6" Water Main Replacement along Elmhurst Road, Parkside Drive, Coles Road, and Johnson Avenue, as requested by Columbia Water. Award to Lake Murray Utility Company, Inc., a certified Local Business Enterprise in the amount of $71,896.25. This firm is located in Chapin, SC. – *Approved*

    Funding Source: 5529999-WM447901-658650. The original awarded amount is $580,888.00, which includes contingency. The original budget amount for this Change Order is $71,896.25.

DRAFT

COLUMBIA CITY COUNCIL MEETING MINUTES
TUESDAY, OCTOBER 1, 2019

11. Council is asked to approve a contract for Project WM4480; 2"-6" Water Main Upgrades Wildewood Subdivision Phase 1, as requested by Columbia Water. Award to DS Utilities, Inc. in an amount not to exceed $161,928.74, which includes contingency. This firm is located in Little Mountain, SC. – *Approved*

Funding Source: 5529999-WM448001-658650. The original budget amount is $215,000.00.

This is a Mentor Protégé Program project. DS Utilities, Inc. of Little Mountain, SC is the mentor and will be performing oversight and management at 10.6% ($14,340.61) of the total contract value. Patriot Construction Co., Inc., a Local Business Enterprise (LBE) of Columbia, SC is the protégé and will be performing water line construction at 89.4% ($120,600.00) of the total contract value.

12. Council is asked to approve an Engineering Agreement for Project SD8468; Upper Wildcat Creek Tributary Watershed Stormwater Infrastructure and Improvements, as requested by Columbia Water. Award to Black & Veatch Corporation in the amount of $195,100.00. This firm is located in Greenville, SC. – *Approved*

Funding Source: 5549999-SD846801-658650. The original budget amount is $195,100.00.

This is a Mentor Protégé Program Project. Black & Veatch Corporation of Greenville, SC is the Mentor and will provide technical consulting services/support at 74.3% ($145,040.00) of the contract value. Civil Engineering Services, Inc., a Minority Business Enterprise (Woman) of Columbia, SC is the Protégé and will provide data collection, field reconnaissance, regulatory review, utility coordination, permitting, and construction observation services at 20% ($39,060.00) of the contract value.
The following sub-consultants will provide additional services:

Bunnell-Lammons Engineering of Greenville, SC will provide geotechnical services at 3.0% ($6,000) of the contract value.

Summit Engineering Group of Spartanburg, SC will provide surveying services at 2.5% ($5,000) of the contract value.

13. Council is asked to approve a Contract for Project SR1026; 5' Sidewalk Construction along Sulton and Maxcy Roads Re-Bid, as requested by Columbia Water. Award to AOS Specialty Contractors, Inc., a Minority Business Enterprise (Woman), in an amount not to exceed $241,195.00, which includes contingency. This firm is located in Lexington, SC. – *Approved*

Funding Source: 40979999-SR102602-658650 (86%) / 5516220-SR102602-638500 (14%). The original budget amount was $241,195.00.

DRAFT

14. Council is asked to approve three (3) Two-Month Contract Extensions for Chemicals for the Canal Water Plant and the Lake Murray Water Plant, as requested by Columbia Water. Award to the lowest bidder of each lot in the total amount of $674,511.20. – *Approved*

Funding Source: Utilities Columbia Canal WTP-Chemicals (5516206-624800) and Utilities Lake Murray Water Pl-Chemicals (5516207-624800). The original budgeted amount is $2,053,872.00.

Chemical	Plant	Vendor	Location	Amount
Aluminum Sulfate	CNWP/LKWP	Chemtrade Chemicals US, LLC	Toronto, ON	$67,096.00 $81,553.00
Carbon	CNWP/LKWP	Cabot Norit Americas Inc.	Marshall, TX	$72,311.00 $372,607.20
Liquid Sodium Chlorite	CNWP	International Dioxcide	North, RI	$80,944.00
			TOTAL	**$674,511.20**

15. Council is asked to approve an Engineering Agreement for Project; Columbia Water Risk and Resilience Assessment/Emergency Response Plan Update, as requested by Columbia Water. Award to AECOM Technical Services Inc., in the amount of $149,750.00. This firm is located in Columbia, SC. – *Approved*

Funding Source: 5516206-638305 and 5516207-638305. The Original Budgeted Amount: $150,000.00

AECOM Technical Services Inc., will provide a Risk and Resilience Assessment (RRA) and Emergency Response Plan (ERP) update in accordance with the requirements of the America's Water Infrastructure Act (AWIA) at 92% ($137,770.00) of the contract value.

The following sub-consultants will provide additional services:

Atlantic South Consulting Services, LLC, a Minority Business Enterprise of Charleston, SC will provide assistance with Risk and Resilience Assessment at 8% ($11,980.00) of the contract value.

DRAFT

COLUMBIA CITY COUNCIL MEETING MINUTES
TUESDAY, OCTOBER 1, 2019

16. ANNEXATION, COMPREHENSIVE PLAN MAP AMENDMENT, AND ZONING MAP AMENDMENT - 1.1-acre portion of 300 Clemson Road; TMS# 25700-02-03(p) – *First reading approval was given on September 17, 2019. - Approved on second reading.*

Ordinance No.: 2019-065 Annexing and Incorporating 1.1-acre portion of 300 Clemson Road, Richland County TMS # 25 700-02-0J(p) into the Plan Columbia Land Use Plan Putting the Pieces Together adopted by Ordinance No.: 2015-014 on February 17, 2015 – *First reading approval was given on September 17, 2019. - Approved on second reading.*

Council District:	4
Proposal:	Request to annex, assign land use classification of Urban Edge Mixed Residential (UEMR) and assign zoning of General Residential District (RG-1). The property is currently classified as Mixed Use. Corridor and zoned Rural District (RU) by Richland County.
Applicant:	Lee Lorick Prina II, Trustee / Mungo Homes Properties, LLC
Staff Recommendation:	Approval
PC Recommendation:	07/08/2019; Approval 8-0, with one recusal

DRAFT

COLUMBIA CITY COUNCIL MEETING MINUTES
TUESDAY, OCTOBER 1, 2019

17. ANNEXATION, COMPREHENSIVE PLAN MAP AMENDMENT, AND ZONING MAP AMENDMENT - 400 Beltline Boulevard and 0.07 acres, East Chapel Drive; TMS# 13810-02-16 and 13810-02-15 – *First reading approval was given on September 17, 2019. - Approved on second reading.*

Ordinance No.: 2019-068 Annexing and Incorporating 400 Beltline Boulevard and 0.07-acre East Chapel Drive, Richland County TMS #13810-02-16 and 13810-02-15 into the Plan Columbia Land Use Plan Putting the Pieces Together adopted by Ordinance No.: 2015-014 on February 17, 2015 – *First reading approval was given on September 17, 2019. - Approved on second reading.*

Council District:	3
Proposal:	Request to annex, assign land use classification of Urban Core Community Activity Center (UCAC-2) and assign zoning of General Commercial District (C-3). The property is currently classified as Mixed Use Corridor and zoned General Commercial District (GC) by Richland County.
Applicant:	Shaffin Valimohamed
Staff Recommendation:	Approval
PC Recommendation:	08/05/2019; Approval 5-0

DRAFT

18. ANNEXATION, COMPREHENSIVE PLAN MAP AMENDMENT, AND ZONING MAP AMENDMENT - 1103 Ferguson Street; TMS# 11204-02-07– *First reading approval was given on September 17, 2019. - Approved on second reading.*

Ordinance No.: 2019-069 Annexing and Incorporating 1103 Ferguson Street, Richland County TMS #11204-02-07 into the Plan Columbia Land Use Plan Putting the Pieces Together adopted by Ordinance No.: 2015-014 on February 17, 2015– *First reading approval was given on September 17, 2019. - Approved on second reading.*

Council District:	2
Proposal:	Request to annex, assign land use classification of Urban Core Neighborhood Activity Center (UCAC-1) and assign zoning of Mixed Use District and Mixed Use District, Flood Protective Area (MX-1 and MX-1, -FP). The property is currently classified as Mixed Residential (High Density) and zoned Light Industrial District (M-1) by Richland County.
Applicant:	Thomas A. Large, Lawrence A. Large, and Charles A. Large / Ballpark LLC
Staff Recommendation:	Approval
PC Recommendation:	08/05/2019; Approval 5-0

DRAFT

COLUMBIA CITY COUNCIL MEETING MINUTES
TUESDAY, OCTOBER 1, 2019

19. COMPREHENSIVE PLAN – FUTURE LAND USE MAP AMENDMENT - 11.58 acres W/S Ferguson Street(p), TMS #11204-02-06(p) – *First reading approval was given on September 17, 2019. - Approved on second reading.*

Ordinance No.: 2019-067 Amending the City of Columbia Comprehensive Plan 2018 Future Land Use Map to include 11.58 acres W/S Ferguson Street (p); Richland County TMS# 11204-02-06(p) – *First reading approval was given on September 17, 2019. - Approved on second reading.*

City Council District:	2
Proposal:	Request to amend Chapter 8.3 of The Columbia Plan 2018 - Future Land Use Map to modify the land use classification on a portion of the property from Urban Core Mixed Residential Type (UCMR-3) to Urban Core Neighborhood Activity Center (UCAC-1).
Applicant:	Andrew Weddle, WREI - Weddle RE Investments
Staff Recommendation:	Approval
PC Recommendation:	08/05/2019; Approval 5-0

20. ZONING MAP AMENDMENT - 301 Assembly Street, 11.58 acres W/S Ferguson Street and 0.02 acres SE/S Dreyfus Road, TMS# 11204-02-02, 11204-02-06 and 11204-02-42 – *First reading approval was given on September 17, 2019. - Approved on second reading.*

City Council District:	2
Proposal:	Request to rezone the parcels from Light Industrial District (M-1), -Flood Protective Area (-FP) to Mixed Use District (MX-1), -Flood Protective Area (-FP).
Applicant:	Neil Meyers, Bright-Meyers Assembly Street, LLC

DRAFT

Staff Recommendation: Approval

PC Recommendation: 08/05/2019; Approval 5-0

21. Ordinance No.: 2019-071 Relating to the Recovery of Collection Costs as a part of Delinquent Debts Collected Pursuant to the Setoff Debt Collection Act – *First reading approval was given on September 17, 2019. - Approved on second reading.*

22. Ordinance No.: 2019-072 Authorizing consumption of beer and wine beverages only at the 2020 Famously Hot New Year Event – *First reading approval was given on September 17, 2019. - Approved on second reading.*

23. Ordinance No.: 2019-075 Authorizing the City of Columbia, South Carolina to execute and deliver an Equipment Lease Purchase Agreement in the Amount of Not Exceeding $9,250,000 Between the City and the Lessor Thereof to Defray the Cost of Acquiring Certain Equipment; and Other Matters Relating Thereto – *First reading approval was given on September 17, 2019. - Approved on second reading.*

24. Ordinance No.: 2019-078 Amending Ordinance 2019-038 to Adopt the Budget for the City of Columbia, South Carolina for the Fiscal Year Ending June 30, 2020– *First reading approval was given on September 17, 2019. - Approved on second reading.*

25. Resolution No.: R-2019-073 Authorizing consumption of beer and wine only at Soda City Adoption Day within the Biergarten Area only on Saturday, November 9, 2019 with a rain contingency of Saturday, November 16, 2019 – *Approved*

26. Resolution No.: R-2019-074 Authorizing consumption of beer and wine only at Soda City Market: Craft Saturday within the Biergarten Area only on Saturday, December 21, 2019 with a rain contingency of Saturday, December 28, 2019 – *Approved*

27. Resolution No.: R-2019-092 Authorizing consumption of beer and wine beverages only at the Rosewood Art and Music Festival on Saturday, October 5, 2019 - *Approved*

DRAFT

COLUMBIA CITY COUNCIL MEETING MINUTES
TUESDAY, OCTOBER 1, 2019

RESOLUTION

28. Resolution No.: R-2019-091 Approving the Honorary naming of the 100, 200, 300, 400, 500 and 600 blocks of Juniper Street between David Street and Farrow Road "Emily England Clyburn Way" – *Approved*

Mayor Benjamin said it is an honor to have Majority Whip James E. Clyburn and his daughters, former FCC Commissioner Mignon Clyburn, Dr. Jennifer Clyburn Reid and her husband, and Angela Clyburn Hannibal with us tonight. The Congressman usually calls to tell me to do something that I know I am supposed to do but when Ms. Emily called, things happened a lot faster. She is a woman of few words but she said what she meant and she meant what she said. She was a model spouse, leader, librarian, and an incredible mom who raised three amazing young ladies. She was a model citizen who gave all that she had for as long as she had. This is one of my proudest moments.

Upon a motion made by Mr. Davis and seconded by Mayor Benjamin, Council voted unanimously to approve Resolution No.: R-2019-091 Approving the Honorary naming of the 100, 200, 300, 400, 500 and 600 blocks of Juniper Street between David Street and Farrow Road "Emily England Clyburn Way".

The Honorable Congressman James E. Clyburn, South Carolina 6th District thanked the Mayor and members of City Council for this tremendous gesture. Over the last week, we have been doing things that Emily asked us to do a long time ago. She knew her eventuality before we could accept it. Last night, we came upon a letter that Emily had written to me asking me to ask you Mr. Mayor to cease assist all efforts being made on her behalf to have a facility named in her honor. She said in the letter, "I have all the honor I need and I do not need this one." Emily and I met when we were teenagers on the campus of South Carolina State nearly 60 years ago. We have been married for 58 years. I want to thank my wonderful daughters, my son-in-law Walt, my brother Charles. One of the most amazing things was to see the grandchildren, nieces, and nephews. This shows that you can have an impact on people's lives without ever having to raise your voice. They never heard Emily raise her voice, but when she spoke, they knew to listen and I knew to respond. Thank you for what you have meant to my family. I hope that those of us who are left, will make you proud of this gesture.

DRAFT

COLUMBIA CITY COUNCIL MEETING MINUTES
TUESDAY, OCTOBER 1, 2019

PRESENTATIONS

29. Columbia Fire Prevention Month Proclamation - The Honorable Mayor Stephen K. Benjamin

Mayor Benjamin and the members of City Council proclaimed October 2019 as Fire Prevention Month in the City of Columbia.

Fire Chief Aubrey Jenkins, Columbia Fire Department said these men and women put their all on the line every time they go out. They are the best of the best. The 2019 Fire Prevention Month theme is: "Not Every Hero Wears a Cape. Plan and Practice Your Escape." Always have an escape plan. Fires can happen to anybody. The Fire Prevention Parade will be held on Saturday, October 12, 2019 at 11:00 a.m. in the Greenview subdivision beginning at David Street and Gabriel Street and ending at Greenview Park with a block party. We want to encourage everybody to practice fire safety; be vigilant, be aware, and watch out for one another. Always make sure you have a working smoke alarm in your home.

Ms. Teresa Wilson, City Manager congratulated Fire Chief Aubrey D. Jenkins on being inducted as 1st Vice President of the South Carolina State Association of Fire Chiefs.

30. National Cyber Security Awareness Month Proclamation - The Honorable Mayor Stephen K. Benjamin

Mayor Benjamin and the members of City Council proclaimed October 2019 as National Cyber Security Month in the City of Columbia.

Mr. Cory Williams, IT Systems Administrator for the Information Technology Department appeared alongside Mr. Eric Goodwill, IT Systems Administrator and Mr. Raymond White, IT Security Analyst. We want to bring awareness to employees and citizens about what you can do to make better decisions when using technology. Cyber threats pose one of the greatest dangers that our city faces. It jeopardizes our infrastructure; endangers our individual liberties; and threatens our way of life. When our intellectual property is stolen, it harms our economy. This year's theme is: "Own it: Secure it; Protect it." During National Cyber Security Awareness Month, the City will work to make our cyber space more secure and we will double our efforts to the role we can each play.

31. National Community Planning Month Proclamation -The Honorable Mayor Stephen K. Benjamin

DRAFT

Mayor Benjamin and the members of City Council proclaimed October 2019 as National Community Planning Month in the City of Columbia.

32. Recognition of North Columbia Partners - Ms. Kassy Alia, Founder and CEO of Serve & Connect

Ms. Kassy Alia, Founder and CEO of Serve & Connect said yesterday marked a very difficult day. It was four years since I lost my husband Greg in the line of duty in the City of Forest Acres. I knew that nothing would bring my husband back, but I wished there was a path forward; one where police and communities could stand together. I am standing before you because I want to be able to say thank you and recognize the amazing men and women who have made this North Columbia partnership possible. They are creating a blueprint for change that is not only transforming our North Columbia community, but it is shaping a future for how people and communities across our country can approach effective community safety partnerships. A portion of a video of North Carolina was presented. The North Columbia Youth Empowerment Initiative video can be viewed online at *https://youtu.be/c3FqyWM0VsY*. Since November 2018, we have engaged with over 193 individuals representing over 70 organizations. She recognized the Columbia Police Department, the Columbia Parks and Recreation Department, and many other partners who were in attendance. Each of these individuals have been transformative to our work and it is just the beginning.

33. Fast Forward Update - Ms. Dee Albritton, Executive Director of Fast Forward

Ms. Dee Albritton, Executive Director of Fast Forward said it has been a 20-year partnership. We have done a lot of things and we have grown a lot. The City of Columbia has been with us all the way. Thank you for everything you have done to make things better for thousands of residents.

Councilor Baddourah thanked Ms. Albritton for the difference she has made and the lives she has touched through Fast Forward. Today, we recognize you for 20-years. Councilman Duvall has a presentation for you.

Mayor Benjamin and the members of City Council proclaimed October 1, 2019 as Fast Forward Day in the City of Columbia.

34. Columbia Museum of Art Update - Ms. Della Watkins, Executive Director

DRAFT

Ms. Della Watkins, Executive Director recognized the Columbia Museum of Art's leadership: Dr. Allen Coles, President of the Board of Trustees; Commissioners Wendell Brown and Joel Smith; and Joelle Ryan Cook, Deputy Director. I am excited to be here today because we are transforming. The changes at the museum over the last three years have been far more than a construction project. For two years, I have been focusing on this transition: how to better serve our communities; how to attract visitors; and how to be that go to tourist destination. We are embracing the last 21-years, but we are also looking forward to our future. With the City of Columbia's vision and support, the Museum opened in 1998 to jumpstart the downtown revitalization. Together with you, a lot of partners, friends, and neighbors, we are a vibrant and economically sound arts, retails, business, and active community district. Thank you for your support of the capital campaign. The renovation is complete. We have this brand new entrance on Main Street and it is making a difference. I also want to thank all the City staff that has helped me. Major art museums across the nation are also changing. They were once a place for art and now they are a place for people to engage in art. I have found that this community is ready to recognize a museum as more than a repository of beautiful art. We have spent months figuring out what we are going to do differently. The CMA is committed to the concept of being a 21st century museum. We need to be inclusive. We have to be participatory. Art is meant to be experienced not just seen. The Museum is brimming with new ideas. The galleries reflect a new interior and the 20 galleries are reinstalled by themes. The Boyd Plaza is in partnership with you to be a game changer for Main Street. Since reopening in March, the Museum has hosted nearly 75 programs with community partners. The month of June was the largest month of attendance in the last 10-years. We promise to be inspiring, welcoming, community centered, playful, and vibrant. We have developed an educational philosophy: contemplate, connect, and create. Come over and take a look. We are diversifying our menu of opportunities. We want to entice residents and visitors to see the Van Gogh exhibit starting on Friday, October 4, 2019.

Councilor Duvall said I could not believe that the boys and girls basketball teams will tip off in Boyd Plaza. I do not know how you did that and I cannot wait to see it.

35. Domestic Violence Awareness Month Proclamation - The Honorable Tameika Isaac Devine

Mayor Benjamin acknowledged Ms. Devine, Ms. Utsey, and several other members of our team investment in making sure that we recognize the scourge of domestic violence. We invest our time, talents, and treasures in meeting the needs of those who need us most.

Mayor Benjamin and the members of City Council proclaimed October 2019 as Domestic Violence Awareness Month in the City of Columbia.

RESOLUTION

36. Resolution No.: R-2019-089 Authorizing the City Attorney's Office to join the City of Columbia in a class action lawsuit against prescription opioid manufacturers and wholesale distributors – *Approved*

Upon a motion made by Mr. Rickenmann and seconded by Mr. Baddourah, Council voted unanimously to approve Resolution No.: R-2019-089 Authorizing the City Attorney's Office to join the City of Columbia in a class action lawsuit against prescription opioid manufacturers and wholesale distributors.

ZONING / PLANNING MATTERS - SECOND READING

37. ANNEXATION, COMPREHENSIVE PLAN MAP AMENDMENT, AND ZONING MAP AMENDMENT - 68.4 Acres Lockman Road; TMS# 29000-02-35 – *First reading approval was given on September 17, 2019. - Approved on second reading.*

Ordinance No.: 2019-070 Annexing and Incorporating 68.40 acres on Lockman Road, Richland County TMS #29000-02-35 into the Plan Columbia Land Use Plan Putting the Pieces Together adopted by Ordinance No.: 2015-014 on February 17, 2015 – *First reading approval was given on September 17, 2019. - Approved on second reading.*

Council District:	4
Proposal:	Request to annex, assign land use classification of Urban Edge Residential Small Lot (UER-1) and assign zoning of Planned Unit Development- Residential District (PUD-R). The property is currently classified as Neighborhood (Medium Density) and zoned Rural District (RU) by Richland County.
Applicant:	Woodcreek Development, LLC
Staff Recommendation:	Approval
PC Recommendation:	08/05/2019; Approval 5-0

DRAFT

Upon a motion made by Mr. Rickenmann and seconded by Mr. McDowell, Council voted unanimously to give second reading approval to the *Comprehensive Plan Map Amendment and Zoning Map Amendment* for 68.4 Acres Lockman Road; TMS# 29000-02-35 **and** Ordinance No.: 2019-070 Annexing and Incorporating 68.40 acres on Lockman Road, Richland County TMS #29000-02-35 into the Plan Columbia Land Use Plan Putting the Pieces Together adopted by Ordinance No.: 2015-014 on February 17, 2015. Mayor Benjamin abstained from voting due to a potential conflict of interest.

Mayor Benjamin said as a matter of habit, I do not vote on issues related to Woodcreek Farms neighborhood where I live. I have no pecuniary interests, but it is just what I do.

ORDINANCES - FIRST READING

38. Ordinance No.: 2019-073 Amend Sec. 23-143 Water service rates and Sec. 23-149 Sewer service rates (a) and Sec. 23-149 Sewer rates – *Approved on first reading.*

Mr. Clint Shealy, P.E., Assistant City Manager for Columbia Water explained that this is clarifying language so that we can bill our new AMI customers in accordance with gallons used versus units of cubic feet. This is not a rate change. As we transition customers to AMI meters, they will be notified how units on their billing will change. The quantity of their bill will still be based on the amount of water that is used.

Upon a motion made by Mr. Baddourah and seconded by Mr. Duvall, Council voted unanimously to give first reading approval to Ordinance No.: 2019-073 Amend Sec. 23-143 Water service rates and Sec. 23-149 Sewer service rates (a) and Sec. 23-149 Sewer rates.

39. Ordinance No.: 2019-079 Authorizing the City Manager to execute a Contract of Sale between the City of Columbia and Emma L. Chaplin for the sale of 134 Burton Heights Circle, Richland County TMS #11605-05-43 – *Approved on first reading.*

Upon a motion made by Mr. Davis and seconded by Mr. Duvall, Council voted unanimously to give first reading approval to Ordinance No.: 2019-079 Authorizing the City Manager to execute a Contract of Sale between the City of Columbia and Emma L. Chaplin for the sale of 134 Burton Heights Circle, Richland County TMS #11605-05-43.

DRAFT

40. Ordinance No.: 2019-082 Authorizing the City Manager to execute a Contract of Sale between the City of Columbia and Zellie Scott for the sale of 100 Gabriel Street, Richland County TMS #14203-11-06 – *Approved on first reading.*

Upon a motion made by Mr. Davis and seconded by Mr. Duvall, Council voted unanimously to give first reading approval to Ordinance No.: 2019-082 Authorizing the City Manager to execute a Contract of Sale between the City of Columbia and Zellie Scott for the sale of 100 Gabriel Street, Richland County TMS #14203-11-06.

41. Ordinance No.: 2019-081 Consenting to the Inclusion of Property in a Multi-County Industrial/Business Park (North Main Senior, LLC, 3700 North Main Street and 3706 North Main Street, Richland County TMS Numbers 09209-20-04 and 09209-20-03 – *Deferred*

42. ANNEXATION, INTERIM COMPREHENSIVE PLAN MAP AMENDMENT, AND INTERIM ZONING MAP AMENDMENT 121 and 141 Sparkleberry Crossing Road; TMS# 25705-07-28 – *Approved on first reading.*

Ordinance No.: 2019-077 Annexing 121 Sparkleberry Crossing Road and 141 Sparkleberry Crossing Road, Richland County TMS #25705-07-28 - *Approved on first reading.*

Council District:	4
Proposal:	Request to annex, assign interim land use classification of Regional Activity Corridor (AC-3) and assign interim zoning of General Commercial (C-3). The property is currently classified as Mixed Use Corridor and zoned General Commercial (GC) by Richland County.
Applicant:	Arthur State Bank
Staff Recommendation:	Annex, Assign Interim Land Use and Interim Zoning
PC Recommendation:	09/09/2019; Annex, Assign Interim Land Use & Interim Zoning Approval (7-0)

DRAFT

Upon a motion made by Mr. Rickenmann and seconded by Mr. Baddourah, Council voted unanimously to give first reading to the *Interim Comprehensive Plan Map Amendment and Interim Zoning Map Amendment* for 121 and 141 Sparkleberry Crossing Road; TMS# 25705-07-28 **and** Ordinance No.: 2019-077 Annexing 121 Sparkleberry Crossing Road and 141 Sparkleberry Crossing Road, Richland County TMS #25705-07-28.

43. ANNEXATION, INTERIM COMPREHENSIVE PLAN MAP AMENDMENT, AND INTERIM ZONING MAP AMENDMENT 4624, 4628, and 4830 Devine Street; TMS# 13810-03-07 – *Approved on first reading.*

Ordinance No.: 2019-076 Annexing 4624, 4628, and 4830 Devine Street, Richland County TMS #13810-03-07 - *Approved on first reading.*

Council District:	3
Proposal:	Request to annex, assign interim land use classification of Urban Core Community Activity Center (UCAC-2) and assign interim zoning of General Commercial District, -Flood Protective Area (C-3, -FP). The property is currently classified as Mixed Use Corridor and zoned General Commercial (GC) by Richland County.
Applicant:	Palmstar C4 Devine, LLC / CCWC Columbia 1, LLC
Staff Recommendation:	Annex, Assign Interim Land Use and Interim Zoning
PC Recommendation:	09/09/2019; Annex, Assign Interim Land Use & Interim Zoning Approval (7-0)

Mayor Benjamin said it is wonderful to see something happening on this site. Can someone discuss the flood concerns there? Are we good to develop on the location?

DRAFT

Ms. Krista Hampton, Planning and Development Services Director said the development team met with staff, storm water, and the floodplain administrator. They understand the regulations and will meet them.

Upon a motion made by Mr. Baddourah and seconded by Mr. Davis, Council voted unanimously to give first reading approval to *Interim Comprehensive Plan Map Amendment and Interim Zoning Map Amendment* for 4624, 4628, and 4830 Devine Street; TMS# 13810-03-07 **and** Ordinance No.: 2019-076 Annexing 4624, 4628, and 4830 Devine Street, Richland County TMS #13810-03-07.

APPOINTMENTS

Mayor Benjamin said we are going to hold the Municipal Election Commission and ask staff to repost it for final consideration at the next meeting. Close the application process on Thursday.

Councilor Rickenmann suggested that Council hold the Central Midlands Council of Governments.

44. Central Midlands Council of Governments

Upon a motion made by Mr. Duvall and seconded by Mayor Benjamin, Council voted unanimously to approve the reappointment of Mr. William Leidinger to the Central Midlands Council of Governments and to hold the remaining appointment. Mr. McDowell was not present for the vote.

45. Central Midlands Development Corporation

Upon a motion made by Mr. Rickenmann and seconded by Mr. Duvall, Council voted unanimously to approve the reappointment of Ms. Ellen Cooper to the Central Midlands Development Corporation Board. Mr. McDowell was not present for the vote.

46. Columbia Museum of Art

Upon a motion made by Mr. Davis and seconded by Mr. Baddourah, Council voted unanimously to approve the appointment of Ms. Nancy D. Tolson to the Columbia Museum of Art Commission.

DRAFT

47. Columbia Tree and Appearance Commission

Upon a motion made by Mayor Benjamin and seconded by Mr. Duvall, Council voted unanimously to approve the appointment of Mr. Steven Flores to the at-large position and Mr. Daniel Brennan to the realtor/developer position for the Columbia Tree and Appearance Commission.

48. Municipal Election Commission – *Deferred*

49. Property Maintenance Board of Appeals

Upon a motion made by Mr. Duvall and seconded by Mr. McDowell, Council voted unanimously to approve the reappointment of Mr. William Scott Barnes, Ms. Leslie Williams, Ms. Tammy Davis, and Mr. Michael Bailey to the Property Maintenance Board of Appeals. The remaining vacancies should be advertised with a deadline of October 10, 2019.

CONSIDERATION OF MATTERS DISCUSSED DURING THE WORK SESSION

No matters were considered at this time.

CITY COUNCIL COMMITTEE REPORTS/REFERRALS

No reports or referrals were made at this time.

APPEARANCE OF THE PUBLIC

Mr. Ben Hassine appeared before the Council seeking help for the taxi transportation industry. Nobody in the United States can ignore the presence of Uber, Lyft, or the networks that provide transportation. I invested more than $200,000 in this city and I have lost it over the past five to seven years. In 1997, I started working for Checker Yellow Cab and I made my way to owning 26 cabs in the city. Now, I have two. My wife is a doctor and she drives taxi with me, because we cannot make it. We pay taxes and we are good citizens. Everybody puts a regulation on us. You can apply to drive for Uber or Lyft by scanning in your driver's license, registration, and proof of insurance. In an hour you are assigned to provide transportation to the general public. For a taxi cab, it takes two weeks to do the application, get a driver's record, background check, and a physical. Limit it to a driver's record and background check. In 2011, we asked you to raise the rates because gas prices were high. Now, is a good time to drop the rates. Blue Ribbon

and Capital City Cab joins me in the request to reduce the rate from $2.50 per mile to $2 per mile.

Mayor Benjamin asked that we hear Mr. Hassine's concerns in an amenable forum and see if we can work to address them given the new normal within which we live with ride share and everything else.

ADJOURNMENT

Upon a motion made by Mr. Davis and seconded by Mayor Benjamin, Council voted unanimously to adjourn the meeting at 7:23 p.m.

Respectfully submitted by:

Erika D. Moore, CMC
City Clerk

DRAFT

COLUMBIA CITY COUNCIL MEETING MINUTES
MONDAY, NOVEMBER 18, 2019

SPECIAL CALLED MEETING – 9:30 A.M.

The Columbia City Council held a Special Called Meeting on Monday, November 18, 2019 at City Hall, 1737 Main Street, Columbia, South Carolina 29201. The Honorable Mayor Pro-Tempore Tameika Isaac Devine called the meeting to order at 9:38 a.m. and the following members of Council were present: The Honorable Sam Davis, The Honorable Moe Baddourah, The Honorable Edward H. McDowell, Jr., and The Honorable Daniel J. Rickenmann. The Honorable Mayor Stephen K. Benjamin and The Honorable Howard E. Duvall, Jr. were absent. Also present were Ms. Teresa Wilson, City Manager and Ms. Erika D. Moore, City Clerk. This meeting was advertised in accordance with the South Carolina Freedom of Information Act.

EXECUTIVE SESSION

Upon a motion made by Mr. Davis and seconded by Mr. Baddourah, Council voted unanimously to enter into Executive Session at 9:39 a.m. for the discussion of **Items 1** and **2** as outlined.

1. Receipt of legal advice related to matters covered by attorney-client privilege pursuant to §30-4-70(a)(2)

   Bond Court Proceedings

2. Discussion of the employment of an employee pursuant to §30-4-70(a)(1)

   Municipal Court Judges

ADJOURNMENT

The meeting was adjourned at 11:58 a.m.

Respectfully submitted by:

Erika D. Moore, CMC
City Clerk

DRAFT

COLUMBIA CITY COUNCIL MEETING MINUTES
TUESDAY, NOVEMBER 19, 2019

SPECIAL CALLED MEETING – 12:30 P.M.

The Columbia City Council held a Special Called Meeting on Tuesday, November 19, 2019 at City Hall, 1737 Main Street, Columbia, South Carolina 29201. The Honorable Mayor Pro-Tempore Tameika Isaac Devine called the meeting to order at 1:30 p.m. and the following members of Council were present: The Honorable Sam Davis, The Honorable Moe Baddourah, and The Honorable Edward H. McDowell, Jr. The Honorable Daniel J. Rickenmann arrived at 1:36 p.m. The Honorable Mayor Stephen K. Benjamin and The Honorable Howard E. Duvall, Jr. were absent. Also present were Ms. Teresa Wilson, City Manager and Ms. Erika D. Moore, City Clerk. This meeting was advertised in accordance with the South Carolina Freedom of Information Act.

EXECUTIVE SESSION

Upon a motion made by Mr. McDowell and seconded by Mr. Davis, Council voted unanimously to enter into Executive Session at 1:30 p.m. for the discussion of **Item 1**.

1. Discussion of the employment of an employee pursuant to §30-4-70(a)(1)

   Municipal Court Judges

ADJOURNMENT

The meeting was adjourned at 2:20 p.m.

Respectfully submitted by:

Erika D. Moore, CMC
City Clerk

DRAFT

COMMUNITY DEVELOPMENT
CITY OF COLUMBIA

Agreement for Services

Date: November 7, 2019	**RFP Number:** CD CP/AI 2019 - 01
Consultant: Civitas, LLC	**Client:** City Of Columbia, Community Development
Contact: Erich Chatham, 843.573.7825 **Civitas, LLC** 1150 Wexford Park Mount Pleasant, South Carolina 29466	**Contact:** Dollie Bristow, 803.545.3371 **City of Columbia** **Community Development Department** 1401 Main Street 4th Floor, Attn: Community Development Columbia, SC 29201
Project Information	
Project Name: 5-Year Consolidated Plan & Analysis to Impediments of Fair Housing Choice Consulting Services **Project Location:** Within City of Columbia Incorporated City Limits	
Proposal for CD CP/AI 2019-01 is incorporated into this agreement for services as Appendix A – Accepted Proposal. This agreement for services is incorporated into the above referenced proposal (CD CP/AI-2019-01).	

This Contract is entered into this _____ day of _____, 20_____, by and between the City of Columbia, South Carolina, herein referred to as the "City" and Civitas, LLC, herein referred to as the "Consultant".

In consideration of the mutual covenants and promises included herein, Consultant and City agree as follows:

1. **Acceptance**: City hereby accepts this offer by Consultant to provide the services as contained in Consultants proposal and agrees that such services and any additional services authorized by the City shall be governed by the terms of this agreement. If the City directs that services commence prior to the execution of this agreement, the City agrees that the commencement of services by the Consultant is in reliance on the City having accepted the terms of this agreement and acknowledgement that the City will execute this agreement forthwith. The City may accept this agreement for services through the use of the City's purchase order, however, all preprinted terms and conditions on the City's purchase order are inapplicable and the terms of this Agreement shall govern. Unless this offer is previously accepted, it will be withdrawn automatically at 5:00pm EST, ninety (90) days from the date of this issue.

2. **Contract Documents:** "Contract documents" shall mean this Agreement for Services and the proposal in response to CD CP/AI-2019-01.

COMMUNITY DEVELOPMENT
CITY OF COLUMBIA

3. **Payment:** The City will pay the Consultant for services and expenses in accordance with the Contract Documents. If prices for services are not specified in the Contract Documents, Consultant's current fee schedule in effect for the location providing the services shall control. Consultant will submit progress invoices to the City monthly and a final invoice upon completion of services. Payment is due upon receipt of the invoice unless otherwise agreed to in writing prior to the submittal of the invoice. Invoices are past due 30 calendar days after the date of the invoice. Attorney's fees and other costs incurred in collecting past due amounts shall be paid by the City. The City's obligation to pay under this agreement is in no way depended upon the City's ability to obtain financing, payment from third parties, approval of governmental or regulatory agencies or the City's successful completion of a project. Without incurring any liability to the City, Consultant may either suspend or terminate this agreement if the City fails to pay any undisputed invoice amounts within 60 calendar days of the invoice date, or if the City states its intention not to pay forthcoming invoices. Such suspension or termination will not waive any other claim Consultant may have against the City. Following such suspension or termination, Consultant may resume work by mutual agreement with the City after payment by the City of all outstanding invoiced amounts and collection expenses. The City waives all claims for damages or delay as a result of such suspension or termination.

4. **Time of Performance:** The effective date of this contract shall be the date the parties sign and complete execution of the contract. The expected engagement of the contract shall be no more than one (1) year from the date of complete execution of the contract, or when the City received final HUD approval for the 2020-2024 ConPlan/Analysis of Impediments and the 2020 Annual Action Plan, whichever comes first.

5. **Contract Duration:** The contract is expected to last until the City receives final HUD approval for the 2020-2024 ConPlan/Analysis of Impediments and the 2020 Annual Action Plan.

6. **Standard of Care:** Consultant and its agents, employees and subcontractors shall endeavor to perform the services for the City with that degree of care and skill ordinarily exercised, under similar circumstances, by consultants practicing in the same discipline at the same time and location. In the event any portion of the services fails to substantially comply with this standard of care obligation and Consultant is promptly notified in writing prior to one year after completion of such portion of the Services, Consultant will re-perform such portion of the services, or if re-performance is impractical, Consultant will refund the amount of compensation paid to Consultant for portion of the Services.

7. **Limitation of Liability:** Consultant's aggregate liability responsibility to the City, including that of our officers, directors, employees and agents, is limited to $100,000, hereinafter referred to as "Limitation of Liability". This limitation of liability applies to all lawsuits, claims or actions, whether identified as arising in tort, including negligence (whether sole or concurrent), professional error or omissions, breach of warranty (expressed or implied), negligent misrepresentation and strict liability, contract, or other legal theory, including without

COMMUNITY DEVELOPMENT
CITY OF COLUMBIA

limitation, Consultants indemnity obligations to the City related to the services provided in this agreement and any continuation or extension of our services.

By entering into this agreement, the City acknowledges that this limitation of liability provision has been reviewed, understood and is a material part of this agreement, and that the City has had an opportunity to seek legal advice regarding this provision.

8. **Disclaimer of Consequential Damages:** In no event shall Consultant or the City be liable to the other for any special, indirect, incidental or consequential loss or damages, including, but not limited to, lost profits, damages for delay, or loss of use arising from or related to services provided by Consultant.

9. **Reports:** In connection with the performance of the services, Consultant shall deliver to the City one or more reports or other written documents reflecting services provided and results of such services. All reports and written documents delivered to the City are instruments reflecting the services provided by Consultant pursuant to this agreement and are made available for the City's use subject to the limitations of this agreement. Instruments of service provided by Consultant to the City pursuant to this agreement are provided for the exclusive use of the City, and the City's agents and employees for the project and are not to be used or relied upon by a third party or in connection with other projects. Subject to the authorized use of the City, and the City's agents, employees, all instruments of service, other written documents, all original data gathered by Consultant and work papers produced by Consultant in the performance of or intrinsic to the services included in the services are, and shall remain, the sole and exclusive property of the Consultant. Documents that may be relied upon by the City are limited to the printed copies (also known as hardcopies) that are signed or sealed by Consultant. Files in electronic media format of text, data, graphics, or of any other types that are furnished by Consultant to the City are only for the convenience of Consultant and the City. Any reliance on information obtained or derived from such electronic files will be at the City's or others use's sole risk.

10. **Safety:** Consultant is solely responsible for the safety and health of Consultants employees and lower tier subcontractors. Consultant shall take necessary precautions for the safety of its employees. Consultant specifically disclaims any authority or responsibility for general job safety and for the safety of persons who are not employed by the Consultant. Should the City, or third parties, be conducting activities on the site, then each shall have responsibility for their own safety and compliance with applicable safety standards.

11. **City Obligations:**
    a. City warrants that all information provided to Consultant regarding the project and project location are complete and accurate to the best of the City's knowledge.
    b. The City agrees to furnish consultant, its agents, employees, and subcontractors a right-of-entry and any authorizations needed for Consultant to enter onto the project site to perform the services included in this agreement.
    c. Consultant will take reasonable precautions to minimize damage to the project site from Consultant's activities and from the use of equipment. City recognizes that

COMMUNITY DEVELOPMENT
CITY OF COLUMBIA

the performance of the services included in this agreement may cause alteration or damage to the site. City acknowledges that some site disturbance is inherent in the work for which consultant will not be responsible. Should the City not be owner of the property, then the City agrees to notify the owner of the aforementioned possibility of unavoidable alteration and damage.

d. The City agrees to disclose the identity of all utilities serving the project site and the present and accurate location of hidden or obscured man-man objects known to the City that may be in Consultants work area.

12. Certifications: The City agrees not to require that consultant execute any certification with regard to work performed, tested or observed under this agreement unless: 1) Consultant believes that it has performed sufficient work to provide a sufficient basis to issue the certification; 2) Consultant believes that the work performed, tested or observed meets the criteria of the certification; and 3) Consultant has reviewed and approved in writing the exact form of such certification prior to execution of this agreement. Any certification by Consultant is limited to an expression of professional opinion based upon the services performed by the Consultant, and does not constitute a warranty or guarantee, either expressed or implied.

13. Failure to Follow Recommendations: The City agrees that it would be unfair to hold the Consultant liable for problems that may occur if the Consultant's recommendations are not followed. Accordingly, the City waives any claim against the Consultant and hold harmless the Consultant from any claim or liability for injury or loss that results from failure to implement the Consultant's recommendations or from implementation of the Consultant's recommendations in a manner that is not in strict accordance with them.

14. Termination:

For Convenience – Upon written notice, City or Consultant may terminate the performance of any further services included in this agreement if the terminating party determines termination is in the terminating party's interest. Upon receipt of the termination notice by either party, Consultant shall stop work on all services included in this agreement and deliver on instruments of service complete at that time to City and City shall pay Consultant within thirty (30) days for all services performed up to the dispatch or receipt of the termination notice. Upon termination for convenience, Consultant and City shall have no further rights or remedies other than those included in this paragraph.

For Cause – In the event of material breach of this agreement, the party not breaching the agreement may terminate it upon five (5) business days' written notice delivered or mailed to the other party, which notice must identify the material breach. The agreement may not be terminated for cause if the breaching party cures the breach within five (5) business days of receipt of the written notice. Upon termination for cause, Consultant shall stop work on all services included in this agreement and deliver any instruments of service complete at that time to the City and the City shall pay Consultant within thirty (30) days for all services performed up to the termination. Upon termination for cause, Consultant and City shall have no further rights or remedies other than those included in this paragraph.

COMMUNITY DEVELOPMENT
CITY OF COLUMBIA

15. **Unforeseen Conditions or Occurrences:** If, during the performance of services, any unforeseen hazardous substance, material, element or constituent or other unforeseen conditions or occurrences are encountered which, in Consultants judgment, significantly affects or may affect the services, the risk involved in providing the services, or the recommended scope of services, Consultant will promptly notify the City. Subsequent to that notification, Consultant may: (a) If practical, in Consultants judgment and with approval of the City, complete the original scope of service in accordance with the procedures originally intended in the proposal; (b) Agree with City to modify the scope of services and the estimate of charges to include the previously unforeseen conditions or occurrences, such revision to be in writing and signed by the parties and incorporated into this agreement; or (c) Terminate the services effective on the date of notification pursuant to the terms of termination for convenience. The City is responsible for reporting any release of hazardous substances to appropriate government agencies as required by law. City acknowledges that Consultant also may have reporting obligations under controlling law and regulations.

16. **Force Majeure:** Consultant shall not be deemed to be in default of this agreement to the extent that any delay or failure in the performance of the scope of work results from any causes beyond its reasonable control. For this purpose, such acts or events shall include, but are not limited to, storms, floods, unusually severe weather, epidemics, civil disturbances, war, riot, strikes, lockouts or other industrial disturbances, and the inability within reasonable diligence to supply personnel, equipment, information or material to the project. In the event that such acts or events occur, it is agreed that Consultant shall attempt to overcome all difficulties arising and to resume as soon as reasonably possible the normal pursuit of the services covered by this agreement.

17. **Insurance:** Consultant shall maintain at its own expense, during the term of this agreement, the following insurance: (1) Workers' Compensation providing statutory coverage required by the state of South Carolina, (2) Employer's Liability within limits of $1,000,000 each accidents, (3) Commercial General Liability with $1,000,000 each occurrence/$2,000,000 aggregate, (4) Commercial Automobile with limits of $1,000,000 each accident, (5) Umbrella Excess Liability with limits of $5,000,000 each occurrence and (6) Professional Liability with limits of $5,000,000 each claim. Upon receipt of written request, the City shall be included as an additional insured under the General Liability and Automobile Liability policies on a primary and non-contributory basis.

18. **Dispute Resolution:** Consultant may, in Consultant's sole discretion, pursue collection of past due invoices by litigation in a court of competent jurisdiction. Other than Consultants collection of past due invoices, in the event of a dispute between Consultant and City, with regard to any matter arising out of or related to this agreement, the parties will use their best efforts to resolve the dispute amicably within fifteen (15) calendar days.

19. **Assignment and Subcontracts:** Neither party may assign this agreement, in whole or in part, without the prior written consent of the other party, except for an assignment of proceeds for

financing purposes. Consultant may subcontract for the services of others without obtaining City's consent if Consultant deems it necessary or desirable to have others perform services.

20. **No Waiver:** No waiver by either party of any default by the other party in the performance of any provision of this agreement shall operate as or be construed as a waiver of any future default, whether like or difference in character.

21. **General Compliance:** The Consultant agrees to comply with the requirements of Title 24 of the Code of Federal Regulations, Part 570 (Community Development Block Grant [CDBG]), Part 92 (HOME Investment Partnership Program [HOME]), Part 574 (Housing Opportunities for Persons with AIDS [HOPWA]) and Title I of the Housing and Community Development Act of 1974 along with any relevant Federal Registrar Notices pertinent to the City allocation of CDBG-Disaster Recovery (DR) funding. The Consultant also agrees to comply with all other applicable Federal, state and local laws, regulations, and policies governing the funds provided under this contract and as outlined in Appendix B – Conditions of Federal Funding and Federal Labor Standards for Contractors.

22. **Independent Contractor:** Nothing contained in this Contract is intended to, or shall be construed in any manner, as creating or establishing the relationship of employer/employee between the parties. The Consultant shall at all times remain an "independent contractor" with respect to the services to be performed under this Contract. The City shall be exempt from payment of all Unemployment Compensation, FICA, retirement, life and/or medical insurance and Workers' Compensation Insurance as the Consultant is an independent contractor.

23. **Miscellaneous:** The validity, interpretation, and performance of this agreement shall be governed by and construed in accordance with the laws of South Carolina. This agreement represents the entire understanding and agreement between the parties hereto relating to the service sand supersedes any and all prior negotiations, discussions, and agreements, whether written or oral, between the parties regarding same. No amendment or modification to this agreement or any waiver of any provisions hereof shall be effective unless in writing, signed by both parties. If any part of this subcontract is found to be unenforceable, then the parties' intent is to have such part rewritten to attain as close as possible the original intents of this unenforceable provision.

24. **Time Bar:** Notwithstanding any applicable state statute of repose or statute of limitation, the parties agree that all legal actions by either party against the other concerning the agreement or the work performed in relation to this agreement, will become barred two (2) years from the time the party knew or should have known of the claim, or two (2) years after completion of Consultants services, whichever occurs earlier.

COMMUNITY DEVELOPMENT
CITY OF COLUMBIA

In Witness Whereof, the Parties have caused this Agreement to be executed by their Duly Authorized Representative.

Proposal for CD CP/AI-2019-01

City (Signature)	Consultant (Signature)
City (Printed Name/Title)	Karl Erich Clothier, Principal/Owner Consultant (Printed Name/Title)
Date	11/5/2019 Date

Appendices:

Appendix A – Accepted Proposal
Appendix B – Conditions of Federal Funding and Federal Labor Standards for Contractors

APPROVED AS TO FORM
Legal Department City of Columbia, SC

We Are Columbia

May 23, 2019

Mr. Tom Johnson
P.O. Box 203556
Dallas, TX 5320-3556

RE: Contract Extension, Acquisition Implementation and Annual Maintenance of Energov

To: Mr. Johnson ,

The initial awarded period on the above referenced contract expired on August 31, 2019. At this time, the City would like to extend this contract until June 30, 2020 at the current price.

Any contract entered into by the City resulting from this extension request shall be subject to cancellation without damages or further obligation when funds are not appropriated or otherwise made available to support the continuation of performance in any fiscal period.

This extension is subject to the approval by the City Manager, City Council for the City of Columbia and/or their authorized designee. If awarded, the maximum amount allowed for the renewal period shall not exceed $59,956.21.

Please annotate on the bottom of this letter, with your signature and date, as to whether you are interested or not in extending the contract until June 30, 2020 with all terms and conditions to remain the same during this extension.

Also, please sign in blue ink, scan and email a copy of this signed letter back to our office no later than 5:00 PM on Friday, September 20, 2019. In addition, please mail the original signed version of this letter back to me while retaining a copy for your files.

I look forward to hearing your response.

Anita Higgins

Anita Higgins, Buyer

Department of Procurement and Contracts
1800 Main Street, 2nd Floor
Columbia, SC 29201
Phone: 803-545-3470 Fax: 803-733-8408

I agree to extend the current contract for ten (10) additional months from September 1, 2019 to June 30, 2020. All other terms and conditions as outlined in the contract are applicable, fully enforceable and will remain unchanged.

✓ Yes _____ No

Signature/ Date

Robert Kennedy Jansen, Director of Contracts
Printed Name of Signer/ Title

Comments: _____

_____

_____

Shannon Lizanski / 10/1/2019
Sandra A. Wright Date
Purchasing Agent Signature

_____ / _____
Teresa B. Wilson Date
City Manager Signature

APPROVED AS TO FORM

Legal Department City of Columbia, SC

Department of Procurement and Contracts
1800 Main Street, 2nd Floor
Columbia, SC 29201
Phone: 803-545-3470 Fax: 803-733-8408

Hewlett Packard Enterprise

Janelle Roberson
Hewlett Packard Enterprise Company
8000 Foothills Blvd
ROSEVILLE CA 95747

Cory Williams
City of Columbia
1136 Washington St
COLUMBIA SC 29201-3224

10/22/2019

Support Account Reference: MXN3095559
HPE Reference Number: 48886175

Dear Cory Williams:

Enclosed is a Hewlett Packard Enterprise support service quote for your products. Review the services, support items, coverage dates, addresses, and company contacts for accuracy. Please advise Hewlett Packard Enterprise of any changes prior to submitting your purchase order or authorization. To order support services detailed in this package, please return billing authorization by choosing one of the following convenient options. Subject to HPE Customer Terms - Support or purchase agreement with Hewlett Packard Enterprise and if applicable, Exhibit E24.

Option 1: Provide an open-ended purchase order. An open-ended purchase order allows Hewlett Packard Enterprise to add products to your agreement as necessary, as well as renew your support from year to year. Cancellation of the support service agreement requires a 30-day written notice.

Option 2: Provide a PO for the coverage dates specified in the enclosed referenced proposal.
Your PO must note at least one of the following, along with the support coverage period:
1. Hewlett Packard Enterprise Reference (quote) number(s),
2. Support Account Reference(s) (SAR)
3. Service Agreement ID(s) (SAID)
4. AMP ID(s)

* If there is an approval signature section on your PO then it should be signed/approved before sending to Hewlett Packard Enterprise. Please indicate if you are taxable or tax exempt. If your organization is Tax Exempt, please send a copy of your Tax Exemption Certificate with your PO. Include your billing frequency and current invoice-to address.

Option 3: Sign and return the attached Signature Authorization Form (SAM).
* If you provide authorization via the SAM form (Signature Authorization Method), please insure that all of the applicable boxes are checked on the form, along with the printed name and signature of the authorizing party.

Note: If the information in Options 1 through 3 is not included in your PO or SAM Form then Hewlett Packard Enterprise will need to contact you to collect this missing data, which will cause a delay in activating your support contract(s). Hewlett Packard Enterprise requires these details for audit purposes.

Hewlett Packard Enterprise values your business and looks forward to providing you with continued support. If you require further assistance, please contact your HPE Representative at 916 5401056 . You can send your PO or SAM to your HPE Representative, or FAX it to .

Sincerely,
Janelle Roberson
HPE Representative

Hewlett Packard Enterprise

SIGNATURE AUTHORIZATION METHOD (SAM)

The Signature Authorization Method (SAM) may be used to order Hewlett Packard Enterprise (HPE) Support Services **ONLY IF A PURCHASE ORDER IS NOT REQUIRED TO AUTHORIZE SERVICE DELIVERY AND REMIT PAYMENT.** This SAM form, including the quotation(s) and governing terms referenced herein shall be referred to collectively as the "Support Agreement."

(1) Customer Information:

Company Name
City of Columbia

Invoice to Address
PO BOX 147
Columbia SC 29217

(2) Contract Information: Unless otherwise notified all quotes under the AMP ID below will be renewed:

[ ] Initial Quote Number:48886175 **[ ]** AMP ID:** 80266386FCP
Support Account Reference: MXN3095559 **Coverage Period:** 11/01/2019 - 10/31/2020
***The enclosed Support Account Overview dated 10/22/2019 summarizes the quotes contained within the above AMP ID.
This quote bundle is valid until: 11/30/2019
[ ] Check as applicable if your authorization is open-ended.
The following term applies only to open-ended support agreements. This Support Agreement is for the period stated on Hewlett Packard Enterprise's quote. It will be extended without modification by consecutive terms of 12 months unless one of the parties gives written notice in accordance with the underlying business terms prior to the end of the respective 12 months. If modifications of the Support Agreement are necessary, Hewlett Packard Enterprise will notify Customer in writing 60 days before the modifications are effective. Customer may terminate this Support Agreement within 30 days from receipt of notice. If Customer does not exercise this right of termination, this Support Agreement will be continued to the end of the current term with the modifications, and extended by consecutive 12-month terms. Re-pricing will occur automatically without further authorization.

(3) REQUIRED- Tax Information:
[ ] Taxable **OR** [ ] Tax Exempt Exemption #_____ (Attach copy of exemption certificate)

(4) REQUIRED- Billing Frequency: Do not enclose Payment. Please select one of the following:
Please bill me:

[ ] Pre-Pay up front for the entire coverage term
[ ] Annually
[ ] Quarterly (Total annual amount must exceed $20,000)
[ ] Semi-Annually (Total annual amount must exceed $20,000)
[ ] Monthly (Total annual amount must exceed $20,000)
[ ] Charge my credit card. Check one: [ ]Visa [ ] MasterCard [ ]American Express

For your protection, please call your HPE Sales Representative with the credit card number.
Cardholder Name (Print) _____
Cardholder's Signature_____
Credit Card Invoice-To Address _____

(5) REQUIRED- Service Authorization and Terms and Conditions:
Customer's signature on this form constitutes authorization for Hewlett Packard Enterprise to invoice Customer for the Hewlett Packard Enterprise support services represented in this Support Agreement. This support agreement will be governed by the following: i) The purchase agreement currently in effect between Customer and Hewlett Packard Enterprise that includes the delivery of Support Services, or if none, the Hewlett Packard Enterprise Customer Terms-Support (CTSP01), the Supplemental Data Sheet (CTDS01); and ii) any applicable Transaction Documents thereto.

_____
Authorized Signature and Date

_____ _____
Printed Name, Title and Phone Number

(6) Completed form should be returned to:
Hewlett Packard Enterprise Company
Janelle Roberson
8000 Foothills Blvd
ROSEVILLE, CA 95747

TEL:916 5401056
FAX:

APPROVED AS TO FORM
Legal Department City of Columbia, SC

Hewlett Packard Enterprise

Support Account Overview

AMP ID: 80266386FCP

Special Terms and Conditions No: 4400011431

Customer Address:
City of Columbia
1136 Washington St
COLUMBIA SC 29201-3224

HPE Address:
Hewlett Packard Enterprise Company
8000 Foothills Blvd
ROSEVILLE CA 95747

Customer Contact:
Cory Williams
Tel: (803) 737-4264
Fax:
E-mail Cory.williams@columbiasc.gov

HPE Representative:
Janelle Roberson
Tel: 916 5401056
Fax:
E-mail janelle.roberson@hpe.com

This quote is valid until 11/30/2019

This order is governed by the specific agreement referenced below in the comment section. If none is identified, then Hewlett Packard Enterprise's standard terms will apply. Either one is the "Agreement". Multi-year support renewals are governed by the Exhibit E24 in addition to the Agreement unless otherwise specified.

- Standard Terms: www.hpe.com/docs/customerterms
- Datasheets: www.hpe.com/info/mktlibrary

Your Support Access Options for Service Agreement Customers:

- **Manage your service agreement online, visit** - https://s360.hpe.com / https://esam.hpe.com
- **HPE Support Center** - www.hpe.com/support/hpesc

Please have your Service Agreement ID and Product/Serial available to expedite your support experience.

Support Account Reference	Service Agreement ID	Coverage Period From:	To:	Description	Contract Total/USD
MXN3095559	1040 9619 6050	11/01/2019	10/31/2020	MXN3095559	59,295.60
Total Excluding Taxes City of Columbia					**59,295.60**

Please refer to the payment schedule for prices to be invoiced yearly in advance.

Support Account Overview

Hewlett Packard Enterprise

AMP ID: 80266386FCP

Customer Address:
City of Columbia
1136 Washington St
COLUMBIA SC 29201-3224

HPE Address:
Hewlett Packard Enterprise Company
8000 Foothills Blvd
ROSEVILLE CA 95747

Support Account Reference	Coverage Period From: To:	Description	Contract Total/USD

Summary of Charges	
Hardware Support	17,228.88
SW Updates eDelivery	14,138.88
Software Support-Labor	27,927.84
Total Excluding Taxes	**59,295.60**

Total excludes all taxes. If applicable, taxes will be added at the time of invoicing at the current tax rate.
Total price includes all additions, deletions, warranties, discounts and adjustments if applicable.
Refer to the detail document for any applicable state & local tax

Please refer to the payment schedule for prices to be invoiced yearly in advance.

Support Account Detail

Hewlett Packard Enterprise

Special Terms and Conditions No: 4400011431
Your PO Reference:
CCRN Number: 0409619602

Support Account Reference: MXN3095559

HPE Reference No.: 48886175

Equipment Address:
City of Columbia
1136 Washington St
Columbia SC 29201-3224

Software Update Address:
City of Columbia
1136 Washington St
Columbia SC 29201-3224

Hardware Contact:
Cory Williams
Tel: (803) 737-4264
Fax:

Software Contact:
Cory Williams
Tel: (803) 737-4264
Fax:

This quote is valid until 11/30/2019
Coverage from: 11/01/2019 to: 10/31/2020

Service Agreement ID: 1040 9619 6050 **For Support, please call: 866-211-5211**

Product No.	Description	Serial No.	Coverage Period from: to:	Qty	Price/USD

Comment:

Participating Addendum #4400011431 must be sited on Purchase Order

H1K93AC	**HPE Proactive Care 24x7 wDMR SVC**			
***** Hardware Support *****				
	HPE Hardware Maintenance Onsite Support Hardware Problem Diagnosis Onsite Support Parts and Material provided 4 Hr Onsite Response 24 Hrs Std Office Days 24 hrs, Day 6 24 hrs, Day 7 Holidays Covered Travel Zone 1 Defective Media Retention No Usage Limitation Remote Delivery SVC Advanced Access to Adv Tech Specialists			
QR483A	HPE 3PAR StoreServ 7400 2-N Storage Base	MXN3095559	1	147.00
	Please note HPE can no longer support this item from: 10/31/2022			
QR486A	HPE 3PAR 7000 4-pt 8Gb/s FC Adapter	KDBYD0AQ93K02E	1	23.00
	Please note HPE can no longer support this item from: 10/31/2022			
QR486A	HPE 3PAR 7000 4-pt 8Gb/s FC Adapter	KDBYD0BDX3W0CK	1	23.00
	Please note HPE can no longer support this item from: 10/31/2022			
QR496A	HPE M6710 900GB 6G SAS 10K 2.5in HDD	2SF306N0G0	1	4.00

Please refer to the payment schedule for prices to be invoiced yearly in advance.

Hewlett Packard Enterprise

Special Terms and Conditions No: 4400011431
Your PO Reference:
CCRN Number: 0409619602

Product No.	Description	Serial No.	Coverage Period from: to:	Qty	Price/USD
QR496A	HPE M6710 900GB 6G SAS 10K 2.5in HDD	2SF306N0G1		1	4.00
QR496A	HPE M6710 900GB 6G SAS 10K 2.5in HDD	2SF306N0FW		1	4.00
QR496A	HPE M6710 900GB 6G SAS 10K 2.5in HDD	2SF306N0FY		1	4.00
QR496A	HPE M6710 900GB 6G SAS 10K 2.5in HDD	2SF306N0FX		1	4.00
QR496A	HPE M6710 900GB 6G SAS 10K 2.5in HDD	2SF306N0FV		1	4.00
QR496A	HPE M6710 900GB 6G SAS 10K 2.5in HDD	2SF306N0CT		1	4.00
QR496A	HPE M6710 900GB 6G SAS 10K 2.5in HDD	2SF306N0CV		1	4.00
QR496A	HPE M6710 900GB 6G SAS 10K 2.5in HDD	2SF306N0CW		1	4.00
QR496A	HPE M6710 900GB 6G SAS 10K 2.5in HDD	2SF306N0CU		1	4.00
QR496A	HPE M6710 900GB 6G SAS 10K 2.5in HDD	2SF306N0CX		1	4.00
QR496A	HPE M6710 900GB 6G SAS 10K 2.5in HDD	2SF306N0CY		1	4.00
QR496A	HPE M6710 900GB 6G SAS 10K 2.5in HDD	2SF306N0CZ		1	4.00
QR496A	HPE M6710 900GB 6G SAS 10K 2.5in HDD	2SF306N0D1		1	4.00
QR490A	HPE M6710 2.5in 2U SAS Drive Enclosure	MXN30901FS		1	30.00
	Please note HPE can no longer support this item from: 10/31/2022				
QR490A	HPE M6710 2.5in 2U SAS Drive Enclosure	MXN30901FT		1	30.00
	Please note HPE can no longer support this item from: 10/31/2022				
QR490A	HPE M6710 2.5in 2U SAS Drive Enclosure	MXN30901FV		1	30.00
	Please note HPE can no longer support this item from: 10/31/2022				
QR496A	HPE M6710 900GB 6G SAS 10K 2.5in HDD	2SF306N0GL		1	4.00
QR496A	HPE M6710 900GB 6G SAS 10K 2.5in HDD	2SF306N0GM		1	4.00
QR496A	HPE M6710 900GB 6G SAS 10K 2.5in HDD	2SF306N0GK		1	4.00
QR496A	HPE M6710 900GB 6G SAS 10K 2.5in HDD	2SF306N0GS		1	4.00
QR496A	HPE M6710 900GB 6G SAS 10K 2.5in HDD	2SF306N0GT		1	4.00
QR496A	HPE M6710 900GB 6G SAS 10K 2.5in HDD	2SF306N0GP		1	4.00
QR496A	HPE M6710 900GB 6G SAS 10K 2.5in HDD	2SF306N0D2		1	4.00
QR496A	HPE M6710 900GB 6G SAS 10K 2.5in HDD	2SF306N0D0		1	4.00
QR496A	HPE M6710 900GB 6G SAS 10K 2.5in HDD	2SF306N0GJ		1	4.00
QR496A	HPE M6710 900GB 6G SAS 10K 2.5in HDD	2SF306N0D9		1	4.00
QR496A	HPE M6710 900GB 6G SAS 10K 2.5in HDD	2SF306N0GD		1	4.00
QR496A	HPE M6710 900GB 6G SAS 10K 2.5in HDD	2SF306N0GH		1	4.00
QR496A	HPE M6710 900GB 6G SAS 10K 2.5in HDD	2SF306N0GF		1	4.00
QR496A	HPE M6710 900GB 6G SAS 10K 2.5in HDD	2SF306N0DU		1	4.00
QR496A	HPE M6710 900GB 6G SAS 10K 2.5in HDD	2SF306N0DS		1	4.00
QR496A	HPE M6710 900GB 6G SAS 10K 2.5in HDD	2SF306N0DR		1	4.00
QR496A	HPE M6710 900GB 6G SAS 10K 2.5in HDD	2SF306N0DT		1	4.00
QR496A	HPE M6710 900GB 6G SAS 10K 2.5in HDD	2SF306N0DZ		1	4.00
QR496A	HPE M6710 900GB 6G SAS 10K 2.5in HDD	2SF306N0DY		1	4.00
QR496A	HPE M6710 900GB 6G SAS 10K 2.5in HDD	2SF306N0DP		1	4.00
QR496A	HPE M6710 900GB 6G SAS 10K 2.5in HDD	2SF306N0DW		1	4.00
QR496A	HPE M6710 900GB 6G SAS 10K 2.5in HDD	2SF306N0DV		1	4.00
QR496A	HPE M6710 900GB 6G SAS 10K 2.5in HDD	2SF306N0DX		1	4.00
QR496A	HPE M6710 900GB 6G SAS 10K 2.5in HDD	2SF306N0D4		1	4.00
QR496A	HPE M6710 900GB 6G SAS 10K 2.5in HDD	2SF306N0D6		1	4.00
QR496A	HPE M6710 900GB 6G SAS 10K 2.5in HDD	2SF306N0D5		1	4.00
QR496A	HPE M6710 900GB 6G SAS 10K 2.5in HDD	2SF306N0D3		1	4.00
QR496A	HPE M6710 900GB 6G SAS 10K 2.5in HDD	2SF306N0D8		1	4.00

Please refer to the payment schedule for prices to be invoiced yearly in advance.

Hewlett Packard Enterprise

Special Terms and Conditions No: 4400011431
Your PO Reference:
CCRN Number: 0409619602

Product No.	Description	Serial No.	Coverage Period from: to:	Qty	Price/USD
QR496A	HPE M6710 900GB 6G SAS 10K 2.5in HDD	2SF306N0DA		1	4.00
QR496A	HPE M6710 900GB 6G SAS 10K 2.5in HDD	2SF306N0DB		1	4.00
QR496A	HPE M6710 900GB 6G SAS 10K 2.5in HDD	2SF306N0DC		1	4.00
QR496A	HPE M6710 900GB 6G SAS 10K 2.5in HDD	2SF306N0EL		1	4.00
QR496A	HPE M6710 900GB 6G SAS 10K 2.5in HDD	2SF306N0EM		1	4.00
QR496A	HPE M6710 900GB 6G SAS 10K 2.5in HDD	2SF306N0EN		1	4.00
QR496A	HPE M6710 900GB 6G SAS 10K 2.5in HDD	2SF306N0EP		1	4.00
QR496A	HPE M6710 900GB 6G SAS 10K 2.5in HDD	2SF306N0ER		1	4.00
QR496A	HPE M6710 900GB 6G SAS 10K 2.5in HDD	2SF306N0ES		1	4.00
QR496A	HPE M6710 900GB 6G SAS 10K 2.5in HDD	2SF306N0EU		1	4.00
QR496A	HPE M6710 900GB 6G SAS 10K 2.5in HDD	2SF306N0ET		1	4.00
QR496A	HPE M6710 900GB 6G SAS 10K 2.5in HDD	2SF306N0EV		1	4.00
QR496A	HPE M6710 900GB 6G SAS 10K 2.5in HDD	2SF306N0EW		1	4.00
QR496A	HPE M6710 900GB 6G SAS 10K 2.5in HDD	2SF306N0D7		1	4.00
QR491A	HPE M6720 3.5in 4U SAS Drive Enclosure	MXN30901FW		1	30.00
	Please note HPE can no longer support this item from: 10/31/2022				
QR491A	HPE M6720 3.5in 4U SAS Drive Enclosure	MXN30901FX		1	30.00
	Please note HPE can no longer support this item from: 10/31/2022				
QR491A	HPE M6720 3.5in 4U SAS Drive Enclosure	MXN30901FY		1	30.00
	Please note HPE can no longer support this item from: 10/31/2022				
QR491A	HPE M6720 3.5in 4U SAS Drive Enclosure	MXN30901H0		1	30.00
	Please note HPE can no longer support this item from: 10/31/2022				
QR499A	HPE M6720 2TB 6G SAS 7.2K 3.5in NL HDD	THG303N0GM		1	4.00
QR499A	HPE M6720 2TB 6G SAS 7.2K 3.5in NL HDD	THG303N0GW		1	4.00
QR499A	HPE M6720 2TB 6G SAS 7.2K 3.5in NL HDD	THG303N0GV		1	4.00
QR499A	HPE M6720 2TB 6G SAS 7.2K 3.5in NL HDD	THG303N0GN		1	4.00
QR499A	HPE M6720 2TB 6G SAS 7.2K 3.5in NL HDD	THG303N0GG		1	4.00
QR499A	HPE M6720 2TB 6G SAS 7.2K 3.5in NL HDD	THG303N0GE		1	4.00
QR499A	HPE M6720 2TB 6G SAS 7.2K 3.5in NL HDD	THG303N0GP		1	4.00
QR499A	HPE M6720 2TB 6G SAS 7.2K 3.5in NL HDD	THG303N0GJ		1	4.00
QR499A	HPE M6720 2TB 6G SAS 7.2K 3.5in NL HDD	THG303N0GK		1	4.00
QR499A	HPE M6720 2TB 6G SAS 7.2K 3.5in NL HDD	THG303N0GL		1	4.00
QR499A	HPE M6720 2TB 6G SAS 7.2K 3.5in NL HDD	THG303N0GH		1	4.00
QR499A	HPE M6720 2TB 6G SAS 7.2K 3.5in NL HDD	THG303N0GC		1	4.00
QR499A	HPE M6720 2TB 6G SAS 7.2K 3.5in NL HDD	THG303N0GD		1	4.00
QR499A	HPE M6720 2TB 6G SAS 7.2K 3.5in NL HDD	THG303N0GF		1	4.00
QR499A	HPE M6720 2TB 6G SAS 7.2K 3.5in NL HDD	THG303N0FD		1	4.00
QR499A	HPE M6720 2TB 6G SAS 7.2K 3.5in NL HDD	THG303N0FE		1	4.00
QR499A	HPE M6720 2TB 6G SAS 7.2K 3.5in NL HDD	THG303N0FF		1	4.00
QR499A	HPE M6720 2TB 6G SAS 7.2K 3.5in NL HDD	THG303N0FG		1	4.00
QR499A	HPE M6720 2TB 6G SAS 7.2K 3.5in NL HDD	THG303N0F6		1	4.00
QR499A	HPE M6720 2TB 6G SAS 7.2K 3.5in NL HDD	THG303N0F5		1	4.00
QR499A	HPE M6720 2TB 6G SAS 7.2K 3.5in NL HDD	THG303N0HE		1	4.00
QR499A	HPE M6720 2TB 6G SAS 7.2K 3.5in NL HDD	THG303N0HF		1	4.00
QR499A	HPE M6720 2TB 6G SAS 7.2K 3.5in NL HDD	THG303N0HH		1	4.00
QR499A	HPE M6720 2TB 6G SAS 7.2K 3.5in NL HDD	THG303N0HB		1	4.00
QR499A	HPE M6720 2TB 6G SAS 7.2K 3.5in NL HDD	THP304N002		1	4.00

Please refer to the payment schedule for prices to be invoiced yearly in advance.

Hewlett Packard Enterprise

Special Terms and Conditions No: 4400011431
Your PO Reference:
CCRN Number: 0409619602

Product No.	Description	Serial No.	Coverage Period from: to:	Qty	Price/USD
QR499A	HPE M6720 2TB 6G SAS 7.2K 3.5in NL HDD	THG303N0G3		1	4.00
QR499A	HPE M6720 2TB 6G SAS 7.2K 3.5in NL HDD	THP303N3UP		1	4.00
QR499A	HPE M6720 2TB 6G SAS 7.2K 3.5in NL HDD	THP303N3UU		1	4.00
QR499A	HPE M6720 2TB 6G SAS 7.2K 3.5in NL HDD	THG303N0G4		1	4.00
QR499A	HPE M6720 2TB 6G SAS 7.2K 3.5in NL HDD	THG303N0FY		1	4.00
QR499A	HPE M6720 2TB 6G SAS 7.2K 3.5in NL HDD	THG303N0FW		1	4.00
QR499A	HPE M6720 2TB 6G SAS 7.2K 3.5in NL HDD	THG303N0HD		1	4.00
QR499A	HPE M6720 2TB 6G SAS 7.2K 3.5in NL HDD	THG303N0HC		1	4.00
QR499A	HPE M6720 2TB 6G SAS 7.2K 3.5in NL HDD	THP303N3UV		1	4.00
QR499A	HPE M6720 2TB 6G SAS 7.2K 3.5in NL HDD	THP303N3UW		1	4.00
QR499A	HPE M6720 2TB 6G SAS 7.2K 3.5in NL HDD	THP304N003		1	4.00
QR499A	HPE M6720 2TB 6G SAS 7.2K 3.5in NL HDD	THP303N3UN		1	4.00
QR499A	HPE M6720 2TB 6G SAS 7.2K 3.5in NL HDD	THP304N004		1	4.00
QR499A	HPE M6720 2TB 6G SAS 7.2K 3.5in NL HDD	THP304N005		1	4.00
QR499A	HPE M6720 2TB 6G SAS 7.2K 3.5in NL HDD	THP303N3UX		1	4.00
QR499A	HPE M6720 2TB 6G SAS 7.2K 3.5in NL HDD	THG303N0FS		1	4.00
QR499A	HPE M6720 2TB 6G SAS 7.2K 3.5in NL HDD	THG303N0FR		1	4.00
QR499A	HPE M6720 2TB 6G SAS 7.2K 3.5in NL HDD	THP304N00M		1	4.00
QR499A	HPE M6720 2TB 6G SAS 7.2K 3.5in NL HDD	THP304N00N		1	4.00
QR499A	HPE M6720 2TB 6G SAS 7.2K 3.5in NL HDD	THP304N00R		1	4.00
QR499A	HPE M6720 2TB 6G SAS 7.2K 3.5in NL HDD	THP304N00S		1	4.00
QR499A	HPE M6720 2TB 6G SAS 7.2K 3.5in NL HDD	THP304N00T		1	4.00
QR499A	HPE M6720 2TB 6G SAS 7.2K 3.5in NL HDD	THP304N00U		1	4.00
QR499A	HPE M6720 2TB 6G SAS 7.2K 3.5in NL HDD	THP304N00V		1	4.00
QR499A	HPE M6720 2TB 6G SAS 7.2K 3.5in NL HDD	THP304N00W		1	4.00
QR499A	HPE M6720 2TB 6G SAS 7.2K 3.5in NL HDD	THP304N00X		1	4.00
QR499A	HPE M6720 2TB 6G SAS 7.2K 3.5in NL HDD	THP304N00Y		1	4.00
QR499A	HPE M6720 2TB 6G SAS 7.2K 3.5in NL HDD	THG303N0FK		1	4.00
QR499A	HPE M6720 2TB 6G SAS 7.2K 3.5in NL HDD	THG303N0FN		1	4.00
QR499A	HPE M6720 2TB 6G SAS 7.2K 3.5in NL HDD	THG303N0FL		1	4.00
QR499A	HPE M6720 2TB 6G SAS 7.2K 3.5in NL HDD	THG303N0FM		1	4.00
QR499A	HPE M6720 2TB 6G SAS 7.2K 3.5in NL HDD	THG303N0FA		1	4.00
QR499A	HPE M6720 2TB 6G SAS 7.2K 3.5in NL HDD	THG303N0FB		1	4.00
QR499A	HPE M6720 2TB 6G SAS 7.2K 3.5in NL HDD	THG303N0FC		1	4.00
QR499A	HPE M6720 2TB 6G SAS 7.2K 3.5in NL HDD	THG303N0F7		1	4.00
QR499A	HPE M6720 2TB 6G SAS 7.2K 3.5in NL HDD	THG303N0F8		1	4.00
QR499A	HPE M6720 2TB 6G SAS 7.2K 3.5in NL HDD	THG303N0F9		1	4.00
QR499A	HPE M6720 2TB 6G SAS 7.2K 3.5in NL HDD	THG303N0MK		1	4.00
QR499A	HPE M6720 2TB 6G SAS 7.2K 3.5in NL HDD	THG303N0MJ		1	4.00
QR499A	HPE M6720 2TB 6G SAS 7.2K 3.5in NL HDD	THG303N0M5		1	4.00
QR499A	HPE M6720 2TB 6G SAS 7.2K 3.5in NL HDD	THG303N0M3		1	4.00
QR499A	HPE M6720 2TB 6G SAS 7.2K 3.5in NL HDD	THG303N0M0		1	4.00
QR499A	HPE M6720 2TB 6G SAS 7.2K 3.5in NL HDD	THG303N0LZ		1	4.00
QR499A	HPE M6720 2TB 6G SAS 7.2K 3.5in NL HDD	THG303N0LV		1	4.00
QR499A	HPE M6720 2TB 6G SAS 7.2K 3.5in NL HDD	THG303N0LU		1	4.00
QR499A	HPE M6720 2TB 6G SAS 7.2K 3.5in NL HDD	THG303N0MG		1	4.00
QR499A	HPE M6720 2TB 6G SAS 7.2K 3.5in NL HDD	THG303N0M8		1	4.00

Please refer to the payment schedule for prices to be invoiced yearly in advance.

Hewlett Packard Enterprise

Special Terms and Conditions No: 4400011431
Your PO Reference:
CCRN Number: 0409619602

Product No.	Description	Serial No.	Coverage Period from: to:	Qty	Price/USD
252663-D72	HPE Basic 4.9kVA/L6-30P/C19/NA/J PDU	CN02470077		1	0.00
252663-D72	HPE Basic 4.9kVA/L6-30P/C19/NA/J PDU	CN02470078		1	0.00
252663-D72	HPE Basic 4.9kVA/L6-30P/C19/NA/J PDU	CN02470087		1	0.00
252663-D72	HPE Basic 4.9kVA/L6-30P/C19/NA/J PDU	CN02470076		1	0.00
BW946A	HPE 42U Location Discovery Kit	CN8305P0RW		1	0.00
BW932A	HPE 600mm Rack Stabilizer Kit			1	0.00
BW906A	HPE 42U 1075mm Side Panel Kit			1	0.00
QR483A	HPE 3PAR StoreServ 7400 2-N Storage Base	MXN3095560		1	147.00
	Please note HPE can no longer support this item from: 10/31/2022				
QR486A	HPE 3PAR 7000 4-pt 8Gb/s FC Adapter	KDBYD0BDX3W0E0		1	23.00
	Please note HPE can no longer support this item from: 10/31/2022				
QR486A	HPE 3PAR 7000 4-pt 8Gb/s FC Adapter	KDBYD0BDX3W0CD		1	23.00
	Please note HPE can no longer support this item from: 10/31/2022				
QR496A	HPE M6710 900GB 6G SAS 10K 2.5in HDD	2SF306N0BA		1	4.00
QR496A	HPE M6710 900GB 6G SAS 10K 2.5in HDD	2SF306N04W		1	4.00
QR496A	HPE M6710 900GB 6G SAS 10K 2.5in HDD	2SF306N0GZ		1	4.00
QR496A	HPE M6710 900GB 6G SAS 10K 2.5in HDD	2SF306N0GU		1	4.00
QR496A	HPE M6710 900GB 6G SAS 10K 2.5in HDD	2SF306N0H4		1	4.00
QR496A	HPE M6710 900GB 6G SAS 10K 2.5in HDD	2SF306N0H6		1	4.00
QR496A	HPE M6710 900GB 6G SAS 10K 2.5in HDD	2SF306N0H8		1	4.00
QR496A	HPE M6710 900GB 6G SAS 10K 2.5in HDD	2SF306N0FL		1	4.00
QR496A	HPE M6710 900GB 6G SAS 10K 2.5in HDD	2SF306N0BX		1	4.00
QR496A	HPE M6710 900GB 6G SAS 10K 2.5in HDD	2SF306N0BR		1	4.00
QR496A	HPE M6710 900GB 6G SAS 10K 2.5in HDD	2SF306N0B9		1	4.00
QR496A	HPE M6710 900GB 6G SAS 10K 2.5in HDD	2SF306N0GX		1	4.00
QR496A	HPE M6710 900GB 6G SAS 10K 2.5in HDD	2SF306N0GV		1	4.00
QR496A	HPE M6710 900GB 6G SAS 10K 2.5in HDD	2SF306N0H1		1	4.00
QR490A	HPE M6710 2.5in 2U SAS Drive Enclosure	MXN30901H3		1	30.00
	Please note HPE can no longer support this item from: 10/31/2022				
QR490A	HPE M6710 2.5in 2U SAS Drive Enclosure	MXN30901H2		1	30.00
	Please note HPE can no longer support this item from: 10/31/2022				
QR490A	HPE M6710 2.5in 2U SAS Drive Enclosure	MXN30901H1		1	30.00
	Please note HPE can no longer support this item from: 10/31/2022				
QR496A	HPE M6710 900GB 6G SAS 10K 2.5in HDD	2SF306N0HA		1	4.00
QR496A	HPE M6710 900GB 6G SAS 10K 2.5in HDD	2SF306N0H9		1	4.00
QR496A	HPE M6710 900GB 6G SAS 10K 2.5in HDD	2SF306N0H5		1	4.00
QR496A	HPE M6710 900GB 6G SAS 10K 2.5in HDD	2SF306N0H7		1	4.00
QR496A	HPE M6710 900GB 6G SAS 10K 2.5in HDD	2SF306N0GB		1	4.00
QR496A	HPE M6710 900GB 6G SAS 10K 2.5in HDD	2SF306N0ED		1	4.00
QR496A	HPE M6710 900GB 6G SAS 10K 2.5in HDD	2SF306N0EK		1	4.00
QR496A	HPE M6710 900GB 6G SAS 10K 2.5in HDD	2SF306N0G9		1	4.00
QR496A	HPE M6710 900GB 6G SAS 10K 2.5in HDD	2SF306N0GC		1	4.00
QR496A	HPE M6710 900GB 6G SAS 10K 2.5in HDD	2SF306N0GW		1	4.00
QR496A	HPE M6710 900GB 6G SAS 10K 2.5in HDD	2SF306N0G8		1	4.00
QR496A	HPE M6710 900GB 6G SAS 10K 2.5in HDD	2SF306N0GY		1	4.00

Please refer to the payment schedule for prices to be invoiced yearly in advance.

Hewlett Packard Enterprise

Special Terms and Conditions No: 4400011431
Your PO Reference:
CCRN Number: 0409619602

Product No.	Description	Serial No.	Coverage Period from: to:	Qty	Price/USD
QR496A	HPE M6710 900GB 6G SAS 10K 2.5in HDD	2SF306N0H3		1	4.00
QR496A	HPE M6710 900GB 6G SAS 10K 2.5in HDD	2SF306N0H2		1	4.00
QR496A	HPE M6710 900GB 6G SAS 10K 2.5in HDD	2SF306N0H0		1	4.00
QR496A	HPE M6710 900GB 6G SAS 10K 2.5in HDD	2SF306N0EC		1	4.00
QR496A	HPE M6710 900GB 6G SAS 10K 2.5in HDD	2SF306N0EE		1	4.00
QR496A	HPE M6710 900GB 6G SAS 10K 2.5in HDD	2SF306N0EJ		1	4.00
QR496A	HPE M6710 900GB 6G SAS 10K 2.5in HDD	2SF306N0GA		1	4.00
QR496A	HPE M6710 900GB 6G SAS 10K 2.5in HDD	2SF306N0EA		1	4.00
QR496A	HPE M6710 900GB 6G SAS 10K 2.5in HDD	2SF306N0EG		1	4.00
QR496A	HPE M6710 900GB 6G SAS 10K 2.5in HDD	2SF306N0EH		1	4.00
QR496A	HPE M6710 900GB 6G SAS 10K 2.5in HDD	2SF306N0EF		1	4.00
QR496A	HPE M6710 900GB 6G SAS 10K 2.5in HDD	2SF306N0FF		1	4.00
QR496A	HPE M6710 900GB 6G SAS 10K 2.5in HDD	2SF306N0FD		1	4.00
QR496A	HPE M6710 900GB 6G SAS 10K 2.5in HDD	2SF306N0FE		1	4.00
QR496A	HPE M6710 900GB 6G SAS 10K 2.5in HDD	2SF306N0FG		1	4.00
QR496A	HPE M6710 900GB 6G SAS 10K 2.5in HDD	2SF306N0G4		1	4.00
QR496A	HPE M6710 900GB 6G SAS 10K 2.5in HDD	2SF306N0GE		1	4.00
QR496A	HPE M6710 900GB 6G SAS 10K 2.5in HDD	2SF306N0HB		1	4.00
QR496A	HPE M6710 900GB 6G SAS 10K 2.5in HDD	2SF306N0HC		1	4.00
QR496A	HPE M6710 900GB 6G SAS 10K 2.5in HDD	2SF306N0FC		1	4.00
QR496A	HPE M6710 900GB 6G SAS 10K 2.5in HDD	2SF306N0FB		1	4.00
QR496A	HPE M6710 900GB 6G SAS 10K 2.5in HDD	2SF306N0FA		1	4.00
QR496A	HPE M6710 900GB 6G SAS 10K 2.5in HDD	2SF306N0F9		1	4.00
QR496A	HPE M6710 900GB 6G SAS 10K 2.5in HDD	2SF306N0F8		1	4.00
QR496A	HPE M6710 900GB 6G SAS 10K 2.5in HDD	2SF306N0F7		1	4.00
QR496A	HPE M6710 900GB 6G SAS 10K 2.5in HDD	2SF306N0HD		1	4.00
QR496A	HPE M6710 900GB 6G SAS 10K 2.5in HDD	2SF306N0G7		1	4.00
QR496A	HPE M6710 900GB 6G SAS 10K 2.5in HDD	2SF306N0G5		1	4.00
QR496A	HPE M6710 900GB 6G SAS 10K 2.5in HDD	2SF306N0G6		1	4.00
QR496A	HPE M6710 900GB 6G SAS 10K 2.5in HDD	2SF306N0EB		1	4.00
QR491A	HPE M6720 3.5in 4U SAS Drive Enclosure	MXN30901H7		1	30.00
	Please note HPE can no longer support this item from: 10/31/2022				
QR491A	HPE M6720 3.5in 4U SAS Drive Enclosure	MXN30901H6		1	30.00
	Please note HPE can no longer support this item from: 10/31/2022				
QR491A	HPE M6720 3.5in 4U SAS Drive Enclosure	MXN30901H5		1	30.00
	Please note HPE can no longer support this item from: 10/31/2022				
QR491A	HPE M6720 3.5in 4U SAS Drive Enclosure	MXN30901H4		1	30.00
	Please note HPE can no longer support this item from: 10/31/2022				
QR499A	HPE M6720 2TB 6G SAS 7.2K 3.5in NL HDD	THG303N0MH		1	4.00
QR499A	HPE M6720 2TB 6G SAS 7.2K 3.5in NL HDD	THG303N0LY		1	4.00
QR499A	HPE M6720 2TB 6G SAS 7.2K 3.5in NL HDD	THG303N0LT		1	4.00
QR499A	HPE M6720 2TB 6G SAS 7.2K 3.5in NL HDD	THG303N0M2		1	4.00
QR499A	HPE M6720 2TB 6G SAS 7.2K 3.5in NL HDD	THG304N04D		1	4.00
QR499A	HPE M6720 2TB 6G SAS 7.2K 3.5in NL HDD	THG304N01A		1	4.00
QR499A	HPE M6720 2TB 6G SAS 7.2K 3.5in NL HDD	THG303N0J0		1	4.00
QR499A	HPE M6720 2TB 6G SAS 7.2K 3.5in NL HDD	THG303N0JY		1	4.00
QR499A	HPE M6720 2TB 6G SAS 7.2K 3.5in NL HDD	THG303N0JX		1	4.00

Please refer to the payment schedule for prices to be invoiced yearly in advance.

Hewlett Packard Enterprise

Special Terms and Conditions No: 4400011431
Your PO Reference:
CCRN Number: 0409619602

Product No.	Description	Serial No.	Coverage Period from: to:	Qty	Price/USD
QR499A	HPE M6720 2TB 6G SAS 7.2K 3.5in NL HDD	THG303N0JW		1	4.00
QR499A	HPE M6720 2TB 6G SAS 7.2K 3.5in NL HDD	THG303N0HV		1	4.00
QR499A	HPE M6720 2TB 6G SAS 7.2K 3.5in NL HDD	THG303N0HT		1	4.00
QR499A	HPE M6720 2TB 6G SAS 7.2K 3.5in NL HDD	THG303N0HN		1	4.00
QR499A	HPE M6720 2TB 6G SAS 7.2K 3.5in NL HDD	THG303N0HG		1	4.00
QR499A	HPE M6720 2TB 6G SAS 7.2K 3.5in NL HDD	THG303N0HZ		1	4.00
QR499A	HPE M6720 2TB 6G SAS 7.2K 3.5in NL HDD	THG303N0LR		1	4.00
QR499A	HPE M6720 2TB 6G SAS 7.2K 3.5in NL HDD	THP304N009		1	4.00
QR499A	HPE M6720 2TB 6G SAS 7.2K 3.5in NL HDD	THG303N0HJ		1	4.00
QR499A	HPE M6720 2TB 6G SAS 7.2K 3.5in NL HDD	THG303N0K6		1	4.00
QR499A	HPE M6720 2TB 6G SAS 7.2K 3.5in NL HDD	THG303N0K7		1	4.00
QR499A	HPE M6720 2TB 6G SAS 7.2K 3.5in NL HDD	THG303N0K5		1	4.00
QR499A	HPE M6720 2TB 6G SAS 7.2K 3.5in NL HDD	THG303N0J1		1	4.00
QR499A	HPE M6720 2TB 6G SAS 7.2K 3.5in NL HDD	THP304N008		1	4.00
QR499A	HPE M6720 2TB 6G SAS 7.2K 3.5in NL HDD	THP304N007		1	4.00
QR499A	HPE M6720 2TB 6G SAS 7.2K 3.5in NL HDD	THP304N001		1	4.00
QR499A	HPE M6720 2TB 6G SAS 7.2K 3.5in NL HDD	THP304N006		1	4.00
QR499A	HPE M6720 2TB 6G SAS 7.2K 3.5in NL HDD	THP303N3V0		1	4.00
QR499A	HPE M6720 2TB 6G SAS 7.2K 3.5in NL HDD	THP303N3UY		1	4.00
QR499A	HPE M6720 2TB 6G SAS 7.2K 3.5in NL HDD	THP303N3UZ		1	4.00
QR499A	HPE M6720 2TB 6G SAS 7.2K 3.5in NL HDD	THG303N0LP		1	4.00
QR499A	HPE M6720 2TB 6G SAS 7.2K 3.5in NL HDD	THG303N0LL		1	4.00
QR499A	HPE M6720 2TB 6G SAS 7.2K 3.5in NL HDD	THG303N0LM		1	4.00
QR499A	HPE M6720 2TB 6G SAS 7.2K 3.5in NL HDD	THG303N0MD		1	4.00
QR499A	HPE M6720 2TB 6G SAS 7.2K 3.5in NL HDD	THG303N0M9		1	4.00
QR499A	HPE M6720 2TB 6G SAS 7.2K 3.5in NL HDD	THG303N0LS		1	4.00
QR499A	HPE M6720 2TB 6G SAS 7.2K 3.5in NL HDD	THG303N0M1		1	4.00
QR499A	HPE M6720 2TB 6G SAS 7.2K 3.5in NL HDD	THG303N0LX		1	4.00
QR499A	HPE M6720 2TB 6G SAS 7.2K 3.5in NL HDD	THG303N0LW		1	4.00
QR499A	HPE M6720 2TB 6G SAS 7.2K 3.5in NL HDD	THG303N0HK		1	4.00
QR499A	HPE M6720 2TB 6G SAS 7.2K 3.5in NL HDD	THG303N0HX		1	4.00
QR499A	HPE M6720 2TB 6G SAS 7.2K 3.5in NL HDD	THG303N0JP		1	4.00
QR499A	HPE M6720 2TB 6G SAS 7.2K 3.5in NL HDD	THG303N0JT		1	4.00
QR499A	HPE M6720 2TB 6G SAS 7.2K 3.5in NL HDD	THG303N0JS		1	4.00
QR499A	HPE M6720 2TB 6G SAS 7.2K 3.5in NL HDD	THG303N0JR		1	4.00
QR499A	HPE M6720 2TB 6G SAS 7.2K 3.5in NL HDD	THG303N0J3		1	4.00
QR499A	HPE M6720 2TB 6G SAS 7.2K 3.5in NL HDD	THG303N0HW		1	4.00
QR499A	HPE M6720 2TB 6G SAS 7.2K 3.5in NL HDD	THG303N0HY		1	4.00
QR499A	HPE M6720 2TB 6G SAS 7.2K 3.5in NL HDD	THG303N0J2		1	4.00
QR499A	HPE M6720 2TB 6G SAS 7.2K 3.5in NL HDD	THG303N0J6		1	4.00
QR499A	HPE M6720 2TB 6G SAS 7.2K 3.5in NL HDD	THG303N0JU		1	4.00
QR499A	HPE M6720 2TB 6G SAS 7.2K 3.5in NL HDD	THG303N0JV		1	4.00
QR499A	HPE M6720 2TB 6G SAS 7.2K 3.5in NL HDD	THG303N0JB		1	4.00
QR499A	HPE M6720 2TB 6G SAS 7.2K 3.5in NL HDD	THG303N0JC		1	4.00
QR499A	HPE M6720 2TB 6G SAS 7.2K 3.5in NL HDD	THG303N0JG		1	4.00
QR499A	HPE M6720 2TB 6G SAS 7.2K 3.5in NL HDD	THG303N0JF		1	4.00
QR499A	HPE M6720 2TB 6G SAS 7.2K 3.5in NL HDD	THG303N0JE		1	4.00

Please refer to the payment schedule for prices to be invoiced yearly in advance.

Hewlett Packard Enterprise

Special Terms and Conditions No: 4400011431
Your PO Reference:
CCRN Number: 0409619602

Product No.	Description	Serial No.	Coverage Period from: to:	Qty	Price/USD
QR499A	HPE M6720 2TB 6G SAS 7.2K 3.5in NL HDD	THG303N0JD		1	4.00
QR499A	HPE M6720 2TB 6G SAS 7.2K 3.5in NL HDD	THG303N0J7		1	4.00
QR499A	HPE M6720 2TB 6G SAS 7.2K 3.5in NL HDD	THG303N0J4		1	4.00
QR499A	HPE M6720 2TB 6G SAS 7.2K 3.5in NL HDD	THG303N0FX		1	4.00
QR499A	HPE M6720 2TB 6G SAS 7.2K 3.5in NL HDD	THG303N0G1		1	4.00
QR499A	HPE M6720 2TB 6G SAS 7.2K 3.5in NL HDD	THG303N0G7		1	4.00
QR499A	HPE M6720 2TB 6G SAS 7.2K 3.5in NL HDD	THG303N0G2		1	4.00
QR499A	HPE M6720 2TB 6G SAS 7.2K 3.5in NL HDD	THG303N0GA		1	4.00
QR499A	HPE M6720 2TB 6G SAS 7.2K 3.5in NL HDD	THG303N0G9		1	4.00
QR499A	HPE M6720 2TB 6G SAS 7.2K 3.5in NL HDD	THG303N0G0		1	4.00
QR499A	HPE M6720 2TB 6G SAS 7.2K 3.5in NL HDD	THG303N0JZ		1	4.00
QR499A	HPE M6720 2TB 6G SAS 7.2K 3.5in NL HDD	THP304N00B		1	4.00
QR499A	HPE M6720 2TB 6G SAS 7.2K 3.5in NL HDD	THP304N00A		1	4.00
QR499A	HPE M6720 2TB 6G SAS 7.2K 3.5in NL HDD	THG303N0G6		1	4.00
QR499A	HPE M6720 2TB 6G SAS 7.2K 3.5in NL HDD	THG303N0FZ		1	4.00
QR499A	HPE M6720 2TB 6G SAS 7.2K 3.5in NL HDD	THG303N0G5		1	4.00
		Hardware Subtotal			**1,830.00**
		Discounts			**-394.26**
		Total			**1,435.74**

Discounts

Government Header Discount % -20%	*366.00-*
Pre Payment HdrDisc% -2%	*28.26-*

***** Software Support *****

HPE Software Technical Unlimited Support
SW Technical Support
SW Electronic Support
24 Hrs Std Office Days
24 Hrs Day 6
24 Hrs Day 7
Holidays Covered
Standard Response
Access to Adv Tech Specialists

BC795A	HP 3PAR 7400 Reporting Suite LTU	1	71.00
BC796A	HP 3PAR 7400 App Suite for VMware LTU	1	71.00
BC798A	HP 3PAR 7400 App Suite for SQL LTU	1	71.00
BC773A	HP 3PAR 7400 OS Suite Base LTU	**1**	105.00
BC774A	HPE 3PAR 7400 OS Suite Drv LTU	**168**	336.00
BC775A	HPE 3PAR 7400 Replication Suite Base LTU	**1**	66.00
BC776A	HPE 3PAR 7400 Replication Suite Drv LTU	**168**	336.00
BC777A	HP 3PAR 7400 Data Opt Suite Base LTU	**1**	91.00
BC778A	HPE 3PAR 7400 Data Opt Suite Drv LTU	**168**	336.00
BC795A	HP 3PAR 7400 Reporting Suite LTU	1	71.00
BC796A	HP 3PAR 7400 App Suite for VMware LTU	1	71.00

Please refer to the payment schedule for prices to be invoiced yearly in advance.

Hewlett Packard Enterprise

Special Terms and Conditions No: 4400011431
Your PO Reference:
CCRN Number: 0409619602

Product No.	Description	Serial No.	Coverage Period from: to:	Qty	Price/USD
BC798A	HP 3PAR 7400 App Suite for SQL LTU			1	71.00
BC773A	HP 3PAR 7400 OS Suite Base LTU			1	105.00
BC774A	HPE 3PAR 7400 OS Suite Drv LTU			168	336.00
BC775A	HPE 3PAR 7400 Replication Suite Base LTU			1	66.00
BC776A	HPE 3PAR 7400 Replication Suite Drv LTU			168	336.00
BC777A	HP 3PAR 7400 Data Opt Suite Base LTU			1	91.00
BC778A	HPE 3PAR 7400 Data Opt Suite Drv LTU			168	336.00
		Software Subtotal			**2,966.00**
		Discounts			**-638.68**
		Total			**2,327.32**
	HPE Software Updates SVC				
	License to Use & SW Updates				
	HPE Recommended SW Upd Method				
	HPE Recommended Doc Upd Method				
BC795A	HP 3PAR 7400 Reporting Suite LTU			1	37.00
BC796A	HP 3PAR 7400 App Suite for VMware LTU			1	37.00
BC798A	HP 3PAR 7400 App Suite for SQL LTU			1	37.00
BC773A	HP 3PAR 7400 OS Suite Base LTU			1	56.00
BC774A	HPE 3PAR 7400 OS Suite Drv LTU			168	168.00
BC775A	HPE 3PAR 7400 Replication Suite Base LTU			1	35.00
BC776A	HPE 3PAR 7400 Replication Suite Drv LTU			168	168.00
BC777A	HP 3PAR 7400 Data Opt Suite Base LTU			1	48.00
BC778A	HPE 3PAR 7400 Data Opt Suite Drv LTU			168	168.00
BC795A	HP 3PAR 7400 Reporting Suite LTU			1	37.00
BC796A	HP 3PAR 7400 App Suite for VMware LTU			1	37.00
BC798A	HP 3PAR 7400 App Suite for SQL LTU			1	37.00
BC773A	HP 3PAR 7400 OS Suite Base LTU			1	56.00
BC774A	HPE 3PAR 7400 OS Suite Drv LTU			168	168.00
BC775A	HPE 3PAR 7400 Replication Suite Base LTU			1	35.00
BC776A	HPE 3PAR 7400 Replication Suite Drv LTU			168	168.00
BC777A	HP 3PAR 7400 Data Opt Suite Base LTU			1	48.00
BC778A	**HPE 3PAR 7400 Data Opt Suite Drv LTU**			168	168.00
		Software Subtotal			**1,508.00**
		Discounts			**-329.76**
		Total			**1,178.24**

Discounts

Government Header Discount % -20%	*894.80-*
Pre Payment HdrDisc% -2%	*73.64-*

Hardware Total	**1,830.00**
Software Total	**4,474.00**
Discount Total	**-1,362.70**
Contract Total	**4,941.30**

Please refer to the payment schedule for prices to be invoiced yearly in advance.

Hewlett Packard Enterprise

Special Terms and Conditions No: 4400011431
Your PO Reference:
CCRN Number: 0409619602

Product No.	Description	Serial No.	Coverage Period from: to:	Qty	Price/USD

Summary of Charges	
Hardware Support	1,435.74
Hardware Support Tax SC	0.00
SW Updates eDelivery	1,178.24
SW Updates eDelivery Tax SC	0.00
Software Support-Labor	2,327.32
Software Support-Labor Tax SC	0.00
TOTAL INCLUDING TAX	**4,941.30**

Taxes have been added at current rate, however, tax rates will be those in effect at the time of invoicing.
Total price includes all additions, deletions, warranties, discounts and adjustments if applicable.

Please refer to the payment schedule for prices to be invoiced yearly in advance.

Payment Schedule as of 10/22/2019

AMP ID: 80266386FCP

Settlement Period from: From: 11/01/2019 to: 10/31/2020

Support Account Reference	11/01/2019 10/31/2020
MXN3095559	59,295.60
Total for the period	
City of Columbia	**59,295.60**

Applicable tax to be added to the invoice.

Please refer to the payment schedule for prices to be invoiced yearly in advance. Price in USD.

Hewlett Packard Enterprise Computer Equipment (Servers, Storage, and Peripherals) NASPO ValuePoint **Max Contract Period**: 10/01/2015 - 03/31/2020 Page last update: 02/07/2019	**Procurement Manager** Will Butler (803) 737-9854 wbutler@mmo.sc.gov
Contract Pricing for all Vendors listed below Hewlett Packard Enterprpise Master Agreement SC Participating Addendum	
Any and all leasing will be through the State Term Contract for IT Equipment Leasing with Presidio Technology Capital, LLC Link to IT Equipment Leasing Contract Sheet	
Important Note: Please review the SC Participating Addendum (PA) prior to purchase as it lists exclusions to each individual vendor's contract. **At a minimum no vendor is allowed to sell: instructional packages; AV equipment; whiteboards; any item for which there is a state term contract; software, software maintenance, subscriptions or downloads (except operating software with initial purchase of equipment).**	

Hewlett Packard Enterprise
Place, Send, or Fax Orders to:
Hewlett Packard Enterprise
Attn: Public Sector Sales
14231 Tandem Blvd., Austin, TX 78728
Fax: 1-800-825-2329
Email: us-sled-order@hpe.com

Enterprise Inside Sales Respresentative
Allie McNeal
Phone: 1-972-362-1557
Email: alexandria.mcneal@hpe.com

For Escalations and NASPO Valuepoint Contract Manager:
Stacey Kearns
Phone: 512-319-3018 (office)
Phone: 501-205-6277 (mobile)
Email: stacey.lyn.kearns@hpe.com

Contract Number: 4400011431
Vendor Number: 7000228727
E-Rate SPIN: Not Available

Orders may also be made through Hewlett Packard Enterprise resellers who have been awarded a contract by ITMO. See list of authorized resellers below.

RESELLERS

Applied Data Technologies
BlueAlly Technology Solutions LLC
BridgeTek Solutions LLC
Carolina Advanced Digital, Inc.
CDW Government LLC
Data Network Solutions Inc.
Edge Solutions LLC
Encore Technology Group
High Performance Technologies Inc
Pinnacle Network Solutions
SHI International Corp
Veristor Systems Inc.

Applied Data Technologies
Place, Send, or Fax Orders to:
Terri Barnes
8515 Crown Crescent Court, Charlotte, NC 28227
Fax: 704-847-3077
Email: terri.barnes@applieddatatech.com

Sales Contacts:
Terri Barnes
Phone: 803-417-4627
Email: terri.barnes@applieddatatech.com

Gretchen Baumann
Phone: 704-847-3000
Email: gretchen.baumann@applieddatatech.com

Ashley Powell
Phone: 803-230-4591
Email: ashley.powell@applieddatatech.com

Additional Contact:
Jennifer Clabeaux
Phone: 704-847-3000
Fax: 704-847-3077
Email: jennifer.clabeaux@applieddatatech.com

Contract Number: 4400011665
Vendor Number: 7000035423
E-Rate SPIN: 143031362

BlueAlly Technology Solutions LLC
Place, Send, or Fax Orders to:
Fax: 919-882-1069
Email: purchaseorders@blueally.com

Sales Contact:
Neal Hamilton
Phone: 704-996-1190
Email: nhamilton@blueally.com

Contract Number: 4400015768
Vendor Number: 7000233491
E-Rate SPIN: 143044080

BridgeTek Solutions LLC
Place, Send, or Fax Order to:
Phone: (864) 214-0221
Fax: (864) 214-0221
Email: sales@bridgeteksolutions.com

Sales Contact:
Kelley Turpin - VP of Sales and Marketing
Phone: (704) 517-3002
Email: kturpin@bridgeteksolutions.com

Technical Contact:
Jason Lepper (CTO)
Phone: (864) 214-0221
Email: jlepper@bridgeteksolutions.com

Contract Number: 4400020638
Vendor Number: 7000207039
E-Rate SPIN: 143037375

Carolina Advanced Digital, Inc.
Place, Send, or Fax Order to:
Fax: (919) 460-1314
Email: julie@cadinc.com

Sales Contact:
Julie Allen
Phone: (919) 469-1313 x211
Fax: (919) 460-1314
Email: julie@cadinc.com

Other Contact:
Jennifer Minella
Phone: (919) 469-1313 x101
Email: jjx@cadinc.com

Contract Number: 4400020639
Vendor Number: 7000049733
E-Rate SPIN: 143006840

CDW Government LLC
Place, Send, or Fax Order to:
Nicole Tuzzolino
230 N Milwaukee Avenue, Vernon Hills, IL 60061
Phone: 866-850-5223
Fax: 847-990-8124
Email: nicotuz@cdwg.com

On Site Sales Support:
Kyle Irwin
Phone: 919-272-6083
Fax: 847-990-8186
Email: kyleirw@cdw.com

Technical Contact:
William Frank
Phone: 866-723-2635
Fax: 847-968-1316
Email: william.frank@cdwg.com

Contract Number: 4400011502
Vendor Number: 7000033346
E-Rate SPIN: 143005588

Data Network Solutions Inc.
Place, Send, or Fax Orders to:
629 Lake Tide Drive, Chapin, SC 29036
Phone: 803-932-9915 (office)
Phone: 803-513-8434 (mobile)
Fax: 803-932-9914
Email: fred.reavis@datanetworksolutions.com

Contract Number: 4400015769
Vendor Number: 7000035473
E-Rate SPIN: 143021096

Edge Solutions LLC
Place, Send, or Fax Order to:
7 Old Roswell St, Alpharetta, GA 30009
Fax: 888-818-1114
Email: tjackson@edge-solutions.com

Sales Contacts:
Sue Ahmed
Phone: 803-331-8788
Fax: 888-818-1114
Email: sahmed@edge-solutions.com

Theresa Jackson
Phone: 770-814-6531
Fax: 888-818-1114
Email: tjackson@edge-solutions.com

Contract Number: 4400017360
Vendor Number: 7000173641
E-Rate SPIN: Not Provided

Encore Technology Group
Place, Send or Fax Order to:
Fax: (864) 551-4809
Email: ap@encoretg.com

Sales Contacts:
Stacy Kuper, Account Executive
Phone: (864) 542-7905
Email: skuper@encoretg.com

Matt Fowler, Account Executive
Phone: (864) 590-6102
Email: mfowler@encoretg.com

John Dockery, Account Executive
Phone: (864) 979-4984
Email: jdockery@encoretg.com

Other Contacts:
Thomas Schwab, President - Solutions and Services
Phone: (864) 326-3226
Email: tschwab@encoretg.com

Russell Young, CFO

Phone: (864) 326-3612
Email: ryoung@encoretg.com

Contract Number: 4400020670
Vendor Number: 7000195727
E-Rate SPIN: 143037152

High Performance Technologies Inc.
Place, Send, or Fax Order to:
11111 Carmel Commons Blvd, STE 340, Charlotte, NC 28226
Fax: 704-552-9132
Email: april.hauxwell@highperftech.com

Sales Contacts:
Blake Tinsley
Phone: 803-322-3237
Email: blake.tinsley@highperftech.com

Keith Roach, VP of Sales
Phone: 336-337-4783
Email: keith.roach@highperftech.com

Additional Contact:
David Fielder, VP of Solution Development
Phone: 336-669-5129
Fax: 704-552-9132

Contract Number: 4400011808
Vendor Number: 7000230922
E-Rate SPIN: Not Available

Pinnacle Network Solutions
Place, Send, or Fax Order to:
823 West Evans Street, Florence, SC 29501
Fax: 843-662-1685
Email: btiller@pinnaclens.com

Sales Contacts:
Brent Tiller
Phone: 843-662-1581 x 1001
Fax: 843-662-1685
Email: btiller@pinnaclens.com

Matt Glaz
Phone: 843-662-1581 x1002

Fax: 843-662-1685
Email: mglaz@pinnaclens.com

Additional Contacts:
Adam Blum
Phone: 843-662-1581 x 1011
Fax: 843-662-1685
Email: ablum@pinnaclens.com

Cliff Smith
Phone: 843-662-1581 x1010
Fax: 843-662-1685
Email: csmith@pinnaclens.com

Contract Number: 4400011664
Vendor Number: 7000130414
E-Rate SPIN: 143030744

SHI International Corp
Place, Send, or Fax Order to:
290 Davidson Avenue, Somerset, NJ 08873
Fax: 732-868-6066
Email: southeastteam@shi.com

State/Local Government Account Executive;
Tim Smith
Phone: 803-212-8717
Email: timothy_smith@shi.com

Higher Ed Account Executive:
Orlinda Rose
Phone: 770-906-1711
Email: orlinda_rose@shi.com

K-12 Account Executive
Willie Ivery
Phone: 404-729-0281
Email: willie_ivery@shi.com

Inside Sales Team Manager:
Jennifer Huseth
Phone: 732-868-6286
Email: jennifer_huseth@shi.com

Public Sector Contracts Specialist:
Nick Grappone

Phone: 732-564-8189
Email: nick_grappone@shi.com

Contract Number: 4400015783
Vendor Number: 7000178284
E-Rate SPIN: 143012572

Veristor Systems Inc.
Place, Send, or Fax Order to:
4850 River Green Parkway, Duluth, GA 30096
Fax: 678-990-1597
Email: marnold@veristor.com

On Site Sales Support:
Mike Arnold
Phone: 704-910-2484
Fax: 678-990-1597
Email: marnold@veristor.com

Technical Contact:
Jeff Garrett
Phone: 704-910-2484
Email: jgarrett@veristor.com

Contract Number: 4400011484
Vendor Number: 7000055365
E-Rate SPIN: Not Available

Requisition # R201154

JUSTIFICATION FOR SOLE SOURCE PROCUREMENT

Based upon the following determination, the proposed procurement action described below is being procured pursuant to the authority of Section 1.16 of the City of Columbia, S.C. Procurement Regulation.

This Department proposes to procure for the Police/Operations (1) Division.

3 Rimage 6000N AutoBurners (2)

as a sole source procurement from COBAN (3)

based upon the following justifications The Rimage DVD auto burner works exclusively (4) with our COBAN bodyworn cameras. No other company can offer the direct integration w/ the DVMS software solution

This sole source is valid through June 29, 2020 **Amount $** 64200.60

Police Department	Signature of Department Head	9/27/19 Date
	Signature of Purchasing Agent	10/3/19 Date
Form must be route in the order of the signatures	Signature of Finance Director	10/7/2019 Date
	Signature of Asst. City Manager	10/7/2019 Date
	Signature of City Manager	10/9/19 Date

Notes: (1) Enter Division Name
(2) Enter description of goods or services to be produced
(3) Enter name of sole source contractor
(4) Enter the basis of sole source procurement

Distribution: Original attached to requisition (Form PUR 108201) Copy retained in Department's file. (Rev. 07/2018)

This agreement may be executed in one or more counterparts, all of which shall be considered one and the same agreement, and shall become a binding agreement when one or more counterparts have been signed by and delivered to each of the parties. Such delivery may occur by facsimile or email/pdf and any counterparts exchanged in this manner shall be considered originals.

A Safe Fleet Brand

October 4, 2019

Columbia Police Department
1 Justice Center
Columbia, SC 29202
Re: COBAN Sole Source Letter

To Whom This May Concern,

This letter is to confirm the COBAN RIMAGE Auto DVD Burner including all add-on software devices, is a sole source product designed, manufactured, and distributed exclusively by COBAN Technologies, Inc. The COBAN RIMAGE Auto DVD Burner is the only solution on the market that fully integrates with the existing COBAN digital evidence capture and management system utilized by the Columbia Police Department to provide a turnkey, operational ecosystem.

COBAN Technologies, Inc. maintains all copyright privileges for the DVMS application and integration of the RIMAGE Auto DVD Burner product and no agents or dealers are authorized to represent or offer the DVMS application or RIMAGE Auto DVD Burner integration solution with COBAN DVMS.

Please do not hesitate to contact me if you have any questions or concerns.

Regards,

Cindy Chang
National Sales Support Manager
COBAN Technologies, Inc.
281-925-0488 ext. 160
cchang@safefleet.net

11375 W. Sam Houston Parkway. S.
Suite No. 800
Houston, TX 77031

Aug 30, 2019

Columbia Police Department
#1 Justice Center
Columbia, SC 29202
Re: Coban Sole Source Letter

To whom this may concern,

This letter is to confirm the COBAN DVMS Rimage Auto DVD Burner Solution is a sole source product, developed solely by COBAN Technologies Inc., and distributed exclusively by COBAN Technologies, Inc.

COBAN Technologies, Inc. warrants that no other company offering a similar or competing solution is able to offer the direct integration with the COBAN DVMS software solution that is currently in place.

COBAN Technologies, Inc. maintains all copyright privileges for the DVMS application and integration of the Rimage Auto DVD Burner product and no agents or dealers are authorized to represent or offer the DVMS application or Rimage Auto DVD Burner integration solution with COBAN DVMS.

Please do not hesitate to contact me if you have any questions or concerns.

Thank you,

Cindy Chang
V.P. Customer Services
281-925-0488
Cindy.Chang@cobantech.com

We Are Columbia

City of Columbia Information Technology Approved Quote

Approval :	09/25/2019	**Expiration :**	11/11/2019
Vendor :	Coban	**Quote # :**	Q-08060-8
Description :	3 x Rimage 6000N AutoBurner		
Approver :	Eric Goodwill - Systems Administrator		
Object Code :	627500 - Computer Equipment, Hardware & Peripherals		
Comments :	Separate purchase for DVD & BluRay media will be needed.		

Important Notes

Shipping:	All deliveries are to be sent to the IT Helpdesk. Use location # L0053 in IFAS.
Credit Card:	Use of a Credit Card for technology purchases is not allowed unless otherwise approved by a member of the IT department.
Computers:	New computers are subject to Microsoft Licensing Fees. Please refer to the Budget Guide for details. Replacement computers assume the license of the old computer. The City asset tag of the old computer must be noted in the PO notes.
Contacting Vendors:	Departments are not allowed to contact vendors for quotes. Please contact the IT Helpdesk to request a quote by emailing Helpdesk@columbiasc.net

A Safe Fleet Brand

Quote: Q-08060-8

Date: 12/14/2018 9:46 AM
Expires On: 11/11/2019

COBAN Technologies, Inc.
Officer Safety, Efficiency and Trust in a Mission Critical Environment
11375 W. Sam Houston Pkwy S., Suite 800
Houston, Texas 77031-2348
United States

Phone: (281) 925-0488
Fax: (281) 925-0535
Email: Sales@cobantech.com

Ship To
Eric Goodwill
Columbia Police Department (Columbia, SC)
1136 Washington St
Columbia, South Carolina 29201
United States
(803) 737-4223
(803) 545-3396
ecgoodwill@columbiasc.gov

Bill To
Columbia Police Department (Columbia, SC)
1136 Washington St
Columbia, South Carolina 29201
United States

SALESPERSON	EXT	EMAIL	DELIVERY METHOD	PAYMENT METHOD
Tyler Hall	x	tylerh@cobantech.com		Net 30

Group1

Line No	PART #	DESCRIPTION	UNIT PRICE	QTY	EXTENDED
QL-0035176	BDVD-26	RIMAGE Auto DVD Burner Built in PC all-in-one - Automated Robotic CD/DVD Back-up Solution-Table Top Note: DVMS extended storage capabilities with DVD Burner: DVMS-Automated DVD Burning Software must be purchased whether DVD burner is supplied by COBAN or by department. Also requires WLIC-14 license and setup. **Blu-Ray Option Included**	USD 7,895.00	3	USD 23,685.00
QL-0035223	WMAIN-18	RIMAGE 5YR RAPID EXCHANGE MAINTENANCE	USD 5,995.00	3	USD 17,985.00
QL-0035224	WLIC-14	COBAN DVMS AUTOMATED DVD BURNING SOLUTION LICENSE (Software License with First Year Technical Support) Continued license and technical support requires annual purchase for Year 2 and beyond	USD 3,095.00	3	USD 9,285.00
QL-0035229	WMAIN-117	COBAN AUTOMATED DVD BURNING SOLUTION SOFTWARE ANNUAL RENEWAL • Software Maintenance and Technical Support YEAR 2	USD 620.00	3	USD 1,860.00
QL-0054247	WMAIN-117	COBAN AUTOMATED DVD BURNING SOLUTION SOFTWARE ANNUAL RENEWAL • Software Maintenance and Technical Support YEAR 3	USD 620.00	3	USD 1,860.00
QL-0054246	WMAIN-117	COBAN AUTOMATED DVD BURNING SOLUTION SOFTWARE ANNUAL RENEWAL • Software Maintenance and Technical Support YEAR 4	USD 620.00	3	USD 1,860.00
QL-0054245	WMAIN-117	COBAN AUTOMATED DVD BURNING SOLUTION SOFTWARE ANNUAL RENEWAL • Software Maintenance and Technical Support YEAR 5	USD 620.00	3	USD 1,860.00
QL-0054236	LSET-50	REMOTE SETUP **FEE WAIVED**	USD 0.00	1	USD 0.00

Line No	PART #	DESCRIPTION	UNIT PRICE	QTY	EXTENDED
QL-0035228	LFEE-055	SHIPPING - Back Office Hardware (Server, Auto DVD) Each	USD 350.00	3	USD 1,050.00
QL-0054206	LFEE-006	FEE- TAX 8%	USD 4,755.60	1	USD 4,755.60
				Group1 TOTAL:	USD 64,200.60

TOTAL: USD 64,200.60

Terms & Conditions

Applicable sales taxes are not reflected on this proposal and will be included in the invoice. Any purchases that are exempt from sales taxes must be accompanied by a tax exemption and/or re-sellers' certificate.

This quote is presented to the customer under the condition that it remains a valid quote for only 60 days after the stated Quote Date, after which the quote becomes null and void.

Please email or fax a signed copy of this quotation and other referenced documents to PMO@cobantech.com or (281) 925-0535 and mail two sets of originals to:

COBAN Technologies, Inc.
11375 W. Sam Houston Pkwy S., Suite 800
Houston, Texas 77031-2348

IN WITNESS WHEREOF, the Parties have caused this Agreement to Purchase to be executed and delivered by their respective authorized representatives whose signatures appear below.

COBAN Technologies, Inc.		Columbia Police Department (Columbia, SC)	
Signature:	_____	Signature:	_____
Printed Name:	_____	Printed Name:	_____
Title:	_____	Title:	_____
Dated:	_____	Dated:	_____

CONTRACT

City of Columbia, South Carolina

Column Repair at Police Headquarters

Bid # 018-19-20-GBP

This Contract is made by and between the City of Columbia, Columbia, South Carolina, hereinafter called Owner, and **Tyler Construction Group, Inc.** with legal address and principal place of business at **P.O. Box 25037, Columbia, SC 25037**, hereinafter called Contractor. Owner and Contractor in consideration of the mutual covenants hereinafter set forth, agree as follows:

ARTICLE 1. WORK.

1.1 Contractor shall perform the Work as specified or indicated in the Contract Documents.

ARTICLE 2. ENGINEER.

2.1 The Project has been designed by **Chao & Associates, Inc.**

ARTICLE 3. CONTRACT TIME.

3.1 The Contract Time shall be **thirty (30)** consecutive calendar days from the said date of commencement as defined in the Notice to Proceed (NTP) to fully complete the amount of work herein contemplated.

3.2 Contractor agrees that the Work shall be prosecuted regularly, diligently and uninterruptedly and at such rate of progress as will insure full completion thereof within the Contract Time stated above. It is expressly understood and agreed, by and between Contractor and Owner that the Contract Time is reasonable for the completion of the Work, taking into consideration the average climatic range and usual industrial conditions prevailing in this locality.

ARTICLE 4. CONTRACT PRICE.

4.1 Owner will pay Contractor for performance of the Work in accordance with the Contract Documents in current funds at the contract price agreed upon in the Contractor's Bid Form attached to this Contract which establishes the contract price as **Fifty-Nine Thousand** Dollars and **Zero** Cents **($59,000.00).**

ARTICLE 5. APPLICATIONS FOR PAYMENT

5.1 Contractor shall submit Applications for Payment in accordance with Part 15 General Specifications of the City's Engineering Regulations. Applications for Payment will be processed as provided in the Conditions of the Contract.

ARTICLE 6. PROGRESS AND FINAL PAYMENTS

6.1 Owner will make progress payments on account of the Contract Price on the basis of Contractor's Applications for Payment, monthly during construction as provided below. All progress payments will be on the basis of the progress of the Work measured by the schedule of values provided for in the General Specifications.

6.2 Upon final inspection and acceptance of the Work, in accordance with Part 15 General Specifications, Owner will pay the remainder of the Contract Price.

ARTICLE 7. LIQUIDATED DAMAGES

7.1 Owner and Contractor recognize that time is of the essence of this Contract and that Owner will suffer financial loss if the Work is not completed within the Contract Time (and specific milestones) specified in Article 3 above, plus any extensions thereof allowed. They also recognize the delays, expense and difficulties involved in proving, in a legal proceeding, the actual loss suffered by Owner if the Work is not completed on time. Accordingly, instead of requiring any such proof, Owner and Contractor agree that as liquidated damages for delay (but not as a penalty) Contractor shall pay Owner **Two Hundred Fifty Dollars and Zero Cents ($250.00)** per day for each calendar day of delay until the Work is complete.

7.2 This liquidated damages provision is non-exclusive and not intended to limit Owner's remedy for breach of this Contract or delay in Contract Times.

ARTICLE 8. ASSURANCE

8.1 Contractor has familiarized himself with the nature and extent of the Contract Documents, Work, locality, and with all local conditions and Federal, State and local laws, ordinances, rules and regulations that in any manner may affect cost, progress or performance of the Work.

8.2 Contractor has studied carefully all reports of investigations and tests of subsurface and latent physical conditions at the site or otherwise affecting cost, progress or performance of the Work that were relied upon by Engineer in the preparation of the Drawings and Specifications and which have been identified in Contract Documents.

8.3 Contractor has made or caused to be made examinations, investigations and tests and studies of such reports and related data [in addition to those referred to in the above paragraph] as Contractor deems necessary for the performance of the Work at the Contract Price within the Contract Time and in accordance with the other terms and conditions of the Contract Documents; and no additional examinations, investigations, tests, reports or similar data are or will be required for such purposes.

8.4 Contractor has correlated the results of all such observations, examinations, investigations, tests, reports and data with the terms and conditions of the Contract Documents.

8.5 Contractor has given Engineer written notice of any conflict, error or discrepancy that Contractor has discovered in the Contract Documents and the written resolution thereof by Engineer is acceptable to Contractor.

8.6 Contractor agrees that the Contract Documents are sufficient in scope and detail to indicate and convey understanding of all terms and conditions for performance of the Work.

ARTICLE 9. CONTRACT DOCUMENTS.

9.1 Contractor agrees, under the terms as stated in the Specifications and Contract Documents and at his/its/their own proper cost and expense, to furnish all the materials, supplies, machinery, equipment, tools superintendence, labor, insurance, and other accessories and services necessary to complete the said project in accordance with the conditions and prices stated in the Proposal, the Instructions to Bidders, the General Conditions of the Contract or General Specifications, the construction specifications, provisions of the Contract Documents, the plans, which include all maps, plats, blue prints, and other drawings and printed or written explanatory matter thereof.

9.2 The Contract Documents that comprise the Contract between Owner and Contractor are attached hereto and made a part hereof and consist of the following:

9.2.1 Invitation for Bid.

9.2.2 Instructions to Bidders.

9.2.3 Bid Form.

9.2.4 This Contract.

9.2.5 Performance and Payment Bond.

9.2.6 Part 15 General Specifications, of the City of Columbia's Engineering Regulations.

9.2.7 Special Provisions.

9.2.8 Specifications (as listed in the Table of Contents).

9.2.9 Drawings, numbered **S1.0** inclusive and dated **November 20, 2018**.

9.2.10 Addendum number **1**.

9.2.11 Any modification, including Change Orders, duly delivered after execution of Contract.

ARTICLE 10. TERMINATION

The City shall, at its sole option and discretion, have the right to terminate this contract for any reason whatsoever by providing the Contractor with a notice of termination to be sent by registered mail, return receipt requested. Whenever the Contractor is terminated for convenience under this clause or is wrongfully terminated under any other clause of this contract, the Contractor shall only be entitled to the actual direct costs of all labor and material expended on the job prior to the effective date of the termination plus 15% or the Contractor shall be entitled to be paid a pro-rate percentage of the total contract price which is equal to its percent of completion, whichever of the two methods provides the lowest sum to be paid to the Contractor. In no event shall the Contractor be entitled to anticipatory profit or damages for any termination under this clause. In no event shall the Contractor be entitled to assert a claim in quantum meruit or any other measure of damages other than that stated herein.

ARTICLE 11. MISCELLANEOUS

11.1 Terms used in this Contract that are defined in Part 15 General Specifications shall have the meanings assigned in the Conditions of the Contract.

11.2 Neither Owner nor Contractor shall, without the prior written consent of the other, assign or sublet in whole or in part any interest under any of the Contract Documents; and, specifically but without limitation, Contractor shall not assign any monies due or to become due without the prior written consent of Owner. In case Contractor assigns all or any part of any monies due or to become due under this Contract, the instrument of assignment shall contain a clause substantially to the effect that it is agreed that the right of the assignee in and to any monies due or to become due to Contractor shall be subject to prior claims of all persons, firms and corporations for services rendered or materials supplied for the performance of the Work called for in this Contract.

11.3 Owner and Contractor each binds himself, his partners, successors, assigns and legal representatives in respect to all covenants, Contracts and obligations contained in the Contract Documents.

11.4 The Contract Documents constitute the entire Contract between Owner and Contractor and may only be altered, amended or repealed by a Modification.

11.5 This Contract does not commit the City of Columbia to pay for any pre-bid costs. Any costs associated with IFB preparation, pre-bid conferences and any other activity prior to award of a contract shall be at the bidder's expense. Rooms, meals, travel, telephone, data processing, administrative and clerical costs associated with the project shall be at the bidder's expense.

This Contract is subject to the final approval of Council and shall become effective on the date listed on the subsequent Notice to Proceed (NTP) and City of Columbia Purchase Order. The Contractor shall not perform work on or incur any costs associated with this contract prior to the commencement date listed on the Notice to Proceed and the City issued purchase order for work outlined herein. The City assumes no liability for any expenses incurred prior to the issuance of the NTP and purchase order.

Space Intentionally Left Blank

Contractor	Owner City of Columbia, SC
BY	BY
	Teresa Wilson, City Manager
(CORPORATE SEAL)	(CORPORATE SEAL)
Attest	Attest
Address for giving notices:	Address for giving notices: Department of Procurement and Contracts 1800 Main Street, 2nd Floor Columbia, SC 29201
Date:	Date:

Note: If Contractor is a corporation, an affidavit giving the principal the right to sign the Contract must accompany the executed Contract.

APPROVED AS TO FORM

Legal Department City of Columbia, SC

Business Information Record

The Bidder shall list all subcontractors and vendors, who will be providing subcontracting services, furnishing materials, etc. for this project. The list shall be submitted in the format provided below. Any proposed changes from the list shall be submitted in writing to the Owner prior to initiation of any action, with the reason for proposed changes.

MUST BE TYPED "NO LINE STRIKE THROUGH"

Business Name and Address	Contract Name and Telephone Number	Services and / or Materials Provided	Cost of Services and / or Material ($ Value) [Column needs to equate accurately to the percentage of total contract column]	Percentage of Total Contract	MBE, WBE, SBE, DBE, LBE (indicate all that apply)	Is Your Business CDBE Approved? Yes or No
Goldie Construction LLC 4707 Arcadia RD Columbia SC 29206	Chris Goldie 803-223-8079	paint install column	21,000	36 %	no	no
Worthington Millwork 17747 Ashley Dr Suite A Panama CityFL 32413	800-872-1608	material only column	$7913	13.4 %	no	
Florence Concrete Products PO Box 5506 Florence SC 29502	843-662-2549	material only concrete base	$7000	11.9 %	no	
				%		
				%		

TOTAL AMOUNT: $ 35913

I certify this information is true, correct, complete and active.

Business Name: Tyler Construction Group Inc

Representative Name / Title: Greg Tyler Vice President

Date: 9/19/19

Event Number	Bid 018-19-20-GBP Addendum 1	**Organization**	City of Columbia, SC
Event Title	Column Repair at Police Headquarters	**Workgroup**	Purchasing
Event Description	Pre-Bid Meeting to be held Monday, Septer	**Event Owner**	Gary Porth
Event Type	IFBs	**Email**	gary.porth@columbiasc.gov
Issue Date	9/4/2019 05:47:19 PM (ET)	**Phone**	803 (545) 3241
Close Date	9/19/2019 01:30:00 PM (ET)	**Fax**	

Responding Supplier	City	State	Response Submitted	Lines Responded	Response Total
Tyler Construction Group Inc	Columbia	SC	9/19/2019 12:35:07 PM (ET)	0	$59,000.00
Watertight Systems, Inc.	Lexington	SC	9/19/2019 07:58:52 AM (ET)	0	$174,809.00

Please note: Lines Responded and Response Total only includes responses to specification. No alternate response data is included.

CONTRACT FOR SERVICES

Between:

This Contract is being awarded under procurement method Bid-007-18-19-KNW City of Columbia Pest Control Services.

1. **PURPOSE** – This Contract is entered into as of the date of the last signature affixed hereto, by and between the City of Columbia, South Carolina (hereinafter referred to as the "City") and All Phase Termite and Pest Control, (hereinafter referred to as the "Contractor"), to provide monthly pest control services and annual termite services for the City of Columbia, SC.

   For and in consideration of the mutual covenants and promises contained herein, the parties agree as follows:

2. **SCOPE OF SERVICES** – Upon written notification by the City to proceed, the Contractor shall provide the services more fully described in Exhibit A, attached hereto. The Contractor shall perform any and all incidental services not specifically set forth in Exhibit A, which are necessary to fully complete the scope of services described herein.

3. **SUPPLEMENTAL OR ADDITIONAL SERVICES** – The City may require supplemental or additional services of the Contractor or recommended by the Contractor and approved by the City in writing.

   The Contractor must obtain written approval from the City for any supplemental or additional services prior to the work being performed. If the Contractor fails to obtain prior written approval to perform the work, the City is under no obligation to compensate the Contractor for services performed.

4. **TERM OF CONTRACT** – The term of the Contract is the date of the execution of this *Award* or a *Notice to Proceed* and Purchase Order (PO) beginning September 2019 and terminating June 30, 2022 for an initial term of approximately three (3) years, with the option to renew or continue with work for two (2) additional one-year periods at the mutual pleasure of both parties.

The decision whether to extend the Contract, upon written request, shall be the sole and exclusive discretion of the City and neither party shall be under any obligation to agree to an extension of the initial term or any additional term.

5. **SCHEDULE FOR COMPLETION OF SERVICES** – The Contractor shall complete any and all services performed under this Contract under the direction of the Support Services Director.

6. **COMPENSATION** – (See Exhibit B)

   A. The compensation to be paid by the City to the Contractor under this Agreement, for Pest Control Services for the City of Columbia (COC), shall be a fixed fee of One Hundred Four Thousand and Six Hundred Fifty Dollars No/100 ($104,650.00) for year one. The fixed fee amount of Forty-Three Thousand and Seven Hundred Dollars No/100 ($43,700.00) for year two. The fixed fee amount of Forty-Three Thousand and Seven Hundred Dollars No/100 ($43,700.00) for year three. The total initial term of three (3) years shall not exceed the fixed fee amount of One-Hundred Ninety-Two Thousand and Fifty Dollars No/100 ($192,050.00).

   B. The Contractor shall submit invoices no more frequently than monthly for services rendered during each phase of the Project. Each invoice submitted must describe the services for which payment is requested, show payment calculations and specify the person(s) rendering such service(s). The Contractor must invoice monthly regardless of work being completed during that period. If no work is completed, a zero balance invoice should be submitted. **Each invoice must also clearly identify any portion of the fee invoiced for subcontracted services, including any such services that are specified in the Summary of Proposed SubContractors shown on Exhibit C hereto.** Each invoice shall bear the signature of the Contractor, whose signature shall certify that the information contained in the invoice is true and accurate and that the invoice amount is currently due and owing. The City will not pay interest or penalty on any past due amount.

   C. Invoicing Procedure: (See Exhibit E)

      Failure of the Contractor to follow these invoice requirements will result in the delay of payment of the invoice.

   D. Prompt Payment to SubContractors and Material Suppliers (Use Prompt Payment Affidavit) **Non-Applicable**

1. The Contractor is required to pay all SubContractors and material suppliers for all work that the SubContractor has satisfactorily completed, no later than twenty (20) calendar days after the Contractor has received payment from the City.

2. In addition, all retainage amounts received from the City by the Contractor must be paid by the Contractor to the SubContractor no later than fourteen (14) calendar days after the Subcontractor has, in the opinion of the City's Support Services Director for Service or his/her designee, satisfactorily completed its portion of the Work.

3. A delay in or postponement of payment to the SubContractor or material supplier requires good cause and prior written approval of the City's Support Services Director for Service or his/her designee.

4. The Contractor is required to include, in each Subcontract, a clause requiring the use of appropriate arbitration mechanisms or other method to resolve all payment disputes.

5. The City will not pay the Contractor for subsequent work performed unless and until the Contractor ensures that the SubContractors have been promptly paid for the work they have performed under all previous payment requests, as evidenced by the filing of City lien waivers, canceled checks (if requested), and the Contractor's sworn statement that it has complied with the prompt payment requirements. The Contractor must submit a Prompt Payment Affidavit, SubContractor list that identifies each SubContractor (both Disadvantaged Business Enterprises (DBEs) and non-DBEs) including Subcontract values and the date and amount of the last payment to such SubContractor(s). That documentation must be provided with every payment request submitted to the City, except for the first payment request.

6. Failure to comply with these prompt payment requirements is a breach of this Contract. The City reserves the right to pursue any and all remedies permitted under law for breach of contract, including, but not limited to, Contractor debarment.

E. Affirmative Action Procurement and Contracting Goals:

It is the goal of the City of Columbia, SC to maximize opportunities for historically Disadvantaged Business Enterprises (DBEs) including, but not limited to, Small Business Enterprises (SBEs), Minority Business Enterprises (MBEs), and Women-Owned Business Enterprises (WBEs). The City has implemented an overall citywide 10% goal to encourage socially and economically disadvantaged business participation. This goal extends to bidders, contractors, SubContractors and suppliers on its procurement and contracting offerings.

Additional information on the City's affirmative action goals and objectives may be obtained by contacting the following office: City of Columbia Office of Business Opportunities, 1225 Lady Street, Suite 102, Columbia, SC 29201, (803) 545-3950.

The City's success in tracking the amount of business received by SBE, MBE and WBE firms (whether as a prime Contractor or SubContractor) is dependent upon the business community partnering with the City in this important endeavor.

The Contractor must comply with the affirmative action terms and conditions as outlined herein. The Contractor, shall in the performance of the Contract, make constructive efforts to assist the City in complying with best practices in contracting as it relates to meeting affirmative action objectives

F. Subcontracting Goals

Under this Contract, the subcontracting goals are as follows:

SB Goals	N/A %
MBE	N/A %
WBE	N/A %
LSA	N/A %

The Contractor will ensure SubContractor performance during the period of performance, and optional periods as applicable. Achievement of these goals is expected during the life of the Contract, including any extensions thereof.

7. **MENTOR-PROTÉGÉ PROGRAM** (http://www.columbiasc.net/business-outreach/) **Non-Applicable** – The City of Columbia encourages, where economically feasible, establishment of mentor-protégé relationships to ensure contracting opportunities for all businesses, including minority / women / small business enterprises. The Mentor-Protégé Program (MPP) helps develop private sector business relationships and enhances the contracting capabilities of minority-owned business enterprises (MBE), women-owned business enterprises (WBE), and small business enterprises (SBE). In order to provide opportunities for growth and to encourage hands-on business relationships, certain capital improvement projects may be designated by the City of Columbia as Mentor-Protégé Program projects. The City of Columbia has determined that participation in the City's Mentor-Protégé Program is required for this project.

   The Contractor must comply with Mentor-Protégé Program Guidelines. The Contractor agrees that the Mentor Protégé Program does not create any third-party beneficiary status or contractual rights and/or duties between the City and the Protégé and that the City is not a party to the Implementation Plan. The Contractor agrees that it has or will enter into a separate contractual Contract with the Protégé to which the City is not a party.

8. **INDEMNIFICATION & INSURANCE**

   A. The Contractor shall procure and shall maintain during the life of this Contract, whether such operation be by itself or by a SubContractor or anyone directly or indirectly employed by either of them, such insurance as required by statute, ordinance, or this Contract, to adequately protect the City from any claims or damages including bodily injury or death, which may arise during performance and operations under this Contract.

      Each insurance policy required by these instructions shall be endorsed to state that coverage shall not be suspended, voided, OR cancelled by either party, reduced in coverage or in limits, unless thirty (30) days prior written notice, by certified mail, return receipt requested, has been given to the City.

      Workers Compensation Insurance: The Contractor shall procure and shall maintain during the life of this Contract, Workers Compensation Insurance for all employees to be engaged in work on the project under this Contract, and in case any work is subcontracted, the Contractor shall require the SubContractor similarly to provide Worker Compensation Insurance for all of the latter employees to be engaged in such

work unless such employees are covered by the protection afforded by the Contractor's Worker Compensation Insurance. The Contractor shall not permit any person who is not protected by Workers Compensation Insurance or a properly approved Self-Insured Workers Compensation Program to perform any activity related to this Contract.

General Liability: The Contractor shall provide to the City evidence of General Liability insurance in an amount not less than One Million Dollars and no/100 ($1,000,000) per occurrence, and Two Million Dollars and no/100 ($2,000,000) dollars aggregate in accordance with the current Code of Ordinances, City of Columbia, South Carolina, which can be located at www.columbiasc.net.

Professional Liability: Professional Liability Insurance in an amount not less than One Million Dollars and No/100 ($1,000,000.00) per occurrence, and Two Million Dollars and No/100 ($2,000,000.00) Aggregate.

Automobile Liability Insurance: Five Hundred Thousand Dollars and No/100 ($500,000.00) combined single limit per accident for bodily injury and property damage.

1. The Contractor shall provide the City with an Errors and Omissions Liability Policy (E&O Policy). The policy shall cover the City for all sources of liability which would be covered by the latest edition of the standard Errors and Omissions Liability Coverage Form, as filed for use by the City of Columbia, without the attachment of restrictive endorsements.

2. Notice of Cancellation and/or Restriction: The policy must be specifically endorsed to provide the City with thirty (30) days' notice of cancellation, non-renewal, change in coverage, and/or restriction.

B. The Contractor shall furnish the City with a certificate showing satisfactory proof of carriage of the insurance required hereunder and such insurance shall be approved by the City prior to the Contractor and any SubContractor of the Contractor commencing any services under this Contract and this insurance shall remain in effect throughout the term of this Contract, and any extensions of service. Insurance shall remain in effect for the duration of the project and for a period of one (1) year after completion. The City of Columbia shall be the Certificate Holder and shall be named as an *Additional Insured.*

C. The Contractor shall indemnify, defend, hold harmless and reimburse the City, its agents, and employees from and against any and all losses, liabilities, expenses, and all claims for damages of any nature whatsoever relating to or arising out of any action or failure to act by Contractor, its SubContractors, officers, agents and employees of any of the obligations under the Contract. Losses, liabilities, expenses and claims for damages shall include, but will not be limited to, civil and criminal fines and penalties, loss of use or services, bodily injury, death, personal injury, or injury to real or personal property, defense costs, legal fees and costs, and attorney's fees for an appeal.

The Contractor will also agree to promptly notify the City of any civil or criminal actions filed against the Contractor or of any notice of violation from any federal or state agency, or of any claim as soon as practical as relates to the services provided under this Contract. The City, upon receipt of such notice, shall have the right at its election to defend any and all actions or suits or to join in defense.

9. PERMITS & LICENSES

A. The Contractor shall be responsible for obtaining any approvals, permits and/or licenses as may be required of the Contractor in performing the services required under this Contract. The Contractor shall be responsible for any costs relating to same.

B. The Contractor shall be responsible for identifying the necessity for and providing any applications and supporting documentation to the City for any approvals and/or permits required of the City in order for the Contractor to perform the services required under this Contract. Such approvals and/or permits may include, but not be limited to, South Carolina Department of Health and Environmental Control (SCDHEC) Construction Permits, SCDHEC Stormwater Management for Construction Sites Permits, SCDHEC Water Resources Permits, Corps of Engineers Permits, City/County/ South Carolina Department of Health and Environmental Control (SCDOT) Encroachment Permits, encroachment permits for other utility rights-of-way and railroad right-of-way encroachment permits/Contracts. The City shall obtain the approvals and/or permits identified by the Contractor and pay any costs relating to same.

C. The Contractor shall answer questions and consult with the City and/or appropriate authorities as necessary to assist the City's efforts in obtaining required permits/approvals.

D. The Contractor shall procure a City of Columbia business license while performing services under this Contract.

E. The Contractor shall maintain valid licenses throughout the term of this contract.

F. This Contract shall be interpreted in accordance with the law of the State of South Carolina. The Contractor shall be responsible for obtaining all permits, licenses and certificates necessary for the performance of the services as referenced herein.

G. The Contractor shall provide all required notices and comply with all applicable federal, state and municipal laws, ordinances, rules, regulations, codes and orders of all authorities having jurisdiction which are or become in force during the performance of this work and which relate to the work, the preservation of the public health including the safety of its employees.

10. **DUTIES UPON TERMINATION** – At termination of this Contract, the Contractor shall immediately provide the City with all records and data (except for proprietary audit work papers) in any format the Contractor is capable of producing and at no cost to the City, which were generated, created or received by the Contractor in performance of the services required by this Contract or as the City may deem necessary to perform the required services by the City or the Contractor's successor. All records shall be free from any proprietary claims or interest. The Contractor agrees to fully cooperate with the City and any successor to ensure an effective transition to continuously provide the required services.

11. **INTEREST OF CONTRACTOR** – The Contractor covenants that Contractor presently has no interest and shall not acquire any interest, direct or indirect, which would conflict in any manner or degree with the performance of services required to be performed under this Contract or which is adverse to the interests of the City. The Contractor further covenants that in the performance of this Contract no person having such interest shall be employed.

The Contractor is expected to make Contractor's services available to other entities but agrees to refrain from representing other entities in matters where the position of the City conflicts with that of the other entity. The City may at its discretion, waive this provision. The Contractor has provided a list of all of its clients with whom there may be potential

conflicts with the City. This list shall be supplemented throughout the duration of this Contract.

12. **TERMINATION OF CONTRACT** – The City may terminate this Contract at any time upon any of the following grounds:

    A. Failure by the City to appropriate funds for the performance of any of the services required in this Contract in any annual budget;

    B. The Contractor fails to perform any of the services required in this Contract and does not correct such deficiency within fifteen (15) days after being notified by the City of such deficiency;

    C. Force Majeure;

    D. The City, at its sole option and discretion, has the right to terminate this Contract for any reason whatsoever. A termination for default under this Contract, if wrongfully made, shall be treated as a termination for convenience under this clause;

    E. Upon expiration of the term of this Contract; and

    F. By mutual Contract.

    Notice of termination shall be sent by registered mail, return receipt requested. In the event of termination, the Contractor shall only be entitled to the actual direct costs of all labor and material expended on the services required under this Contract prior to the effective date of the termination or the Contractor shall be entitled to be paid a pro-rata percentage of the total Contract price which is equal to its percent of completion, whichever of the two methods provides the lowest sum to be paid to the Contractor. In no event shall the Contractor be entitled to anticipatory profit or damages for any termination under this Contract. In no event shall the Contractor be entitled to assert a claim in quantum meruit or any other measure of damages other than that stated herein.

13. **OWNERSHIP OF PROJECT** - All data, documents or other information of any description generated by or used by the Contractor or any SubContractor retained by the Contractor and related to the services required by this Contract shall be the property of the City and shall not be used by the Contractor for any purpose whatsoever except to perform the services required by this Contract.

14. **OWNERSHIP OF PROJECT DOCUMENTS** - All data, documents or other information (except for proprietary audit work papers) of any description generated by or used by the Contractor or any SubContractor retained by the Contractor and related to the services required by this Contract shall be the property of the City and shall not be used by the Contractor for any purpose whatsoever except to perform the services required by this Contract.

15. **NOTICE** - All notices and communications in connection with this Contract will be addressed to the following:

City of Columbia
Name: Office of Procurement and Contracts
Title: Purchasing Agent
Address: 1800 Main Street
Second Floor
Columbia, SC 29201
Phone: (803) 545-3470
Fax: N/A
Email: procurement@columbiasc.gov

All Phase Termite and Pest Control
Name: William L. Pate Jr.
Title: Business Owner
Address: PO Box 581
Fort Lawn, SC 29714
Phone: (803) 371-6531
Email: Allphasepest@gmail.com

16. **CONSENT DECREE Non-Applicable**

A. The services performed by the Contractor pursuant to this Contract are required in whole or in part to satisfy the terms of the Consent Decree entered by the United Stated District Court for the District of South Carolina on May 21, 2014, in the case captioned *The United States of America and State of South Carolina by and through the Department of Health and Environmental Control v. City of Columbia*, Civil Action No. 3:13-2429-TLW (the "Consent Decree"), a copy of which has been provided to the Contractor by the City and is incorporated by reference herein. The Contractor shall perform the services pursuant to this Contract in conformity with the terms of the Consent Decree as required by Paragraph 5 therein.

B. In addition to the requirements above, the Contractor shall comply with the document retention requirements of Paragraph 68 of the Consent Decree which includes, but is not limited to, the obligation to preserve all non-identical copies of all documents, records, or other information (including documents, records, or other information in electronic form) in the Contractor's possession or control that relate in any manner to the Contractor's performance under this Contract ("Preserved

Documents"). Upon the Contractor's performance of all services required under this Contract, the Contractor shall provide the City with all Preserved Documents. In addition to the requirements above, the Contractor shall provide the City with all Preserved Documents upon termination of this Contract.

C. Upon the occurrence of a force majeure event as defined in Paragraph 55 of the Consent Decree, the Contractor shall provide notice to the City's Director of Finance in person, by phone, or by electronic mail within twenty-four (24) hours of when the Contractor first knew or should have known that the event might cause a delay. Within three (3) days thereafter, the Contractor shall provide written notice in accordance with Section XII above to include the following information: an explanation and description of the reasons for the delay; the anticipated duration of the delay; all actions taken or to be taken in an effort to prevent or minimize the delay; a schedule for implementation of any measures to be taken in an effort to prevent or mitigate the delay or the effect of the delay; and the Contractor's rationale for attributing such delay to a force majeure event. The Contractor shall include with any notice all available documentation supporting the claim that the delay was attributable to a force majeure event.

D. The Contractor shall reimburse the City the amount of any stipulated penalties imposed on the City pursuant to Paragraph 47 of the Consent Decree if the Contractor neglects, fails, or refuses to meet the deadlines set forth in Exhibit A attached hereto. The Contractor agrees that any failure to meet such deadlines will result in the City's failure to meet the deadlines set forth in the Consent Decree except in the event of force majeure notice by the Contractor that results in the extension of said deadline by the U.S. Environmental Protection Agency under the Consent Decree. The City reserves all other remedies available for the Contractor's failure to perform pursuant to the Contract.

E. The Contractor shall perform the services pursuant to this Contract using sound engineering practices as set forth in Paragraph 9 of the Consent Decree.

17. MISCELLANEOUS

A. Nothing in this Contract shall be construed to give any rights or benefits to anyone other than the City and the Contractor.

B. The Contractor shall be responsible for performance of all services required by this Contract. The Contractor does not act as the City's agent or employee.

C. The Contractor will not assign or sublet its obligations to perform the services required by this Contract without the written consent of the City. The Contractor shall be as fully responsible to the City for the acts and omission of its SubContractors, as it is for the acts and omissions of persons directly employed by the Contractor.

The Contractor shall furnish and its SubContractors shall furnish all information and reports required hereunder.

D. In the event there are any disagreements between the City and the Contractor with regard to any of the requirements, specifications or interpretation of this Contract, the Contractor agrees to defer to the reasonable interpretations of the City as, from time to time, may be made by the City. Ambiguities in the terms of this Contract, if any, shall not be construed against the City.

E. This Contract shall be construed in accordance with the laws and City of Columbia Code of Ordinances and those of the State of South Carolina. The Contractor agrees to subject itself to the jurisdiction and venue of the courts of Richland or Lexington County, State of South Carolina as to all matters and disputes arising or to arise under this Contract and the performance thereof. The City may seek attorney's fees and the Contractor agrees to pay such fees as awarded by the Court or other body. No attorney's fees may be sought by, nor will be paid to, the Contractor.

F. This Contract represents the entire Contract between the City and the Contractor and supersedes all prior communications, negotiations, representations or Contracts, either written or oral. The parties may amend this Contract at any time provided that such Amendments are executed in writing, signed by a duly authorized representative of both organizations, and approved, where applicable, by the City's governing body.

The City may, in its discretion, amend this Contract to conform with federal, state, or local governmental guidelines, policies and available funding amounts, or for other reasons. If such Amendments result in a change in the funding, the scope of services, or schedule of, the activities to be undertaken as part of the Contract, such modifications will be incorporated only by written amendment signed by both the City and the Contractor.

G. The failure of either the Contractor or the City to insist upon the strict performance of any provision of this Contract shall not be deemed to be a waiver of the right to insist upon strict performance of such provision or of any other provision of this Contract at any time. Partial payment by the City shall not be construed as a waiver. Waiver of any breach of this Contract shall not constitute waiver of a subsequent breach.

H. In the event any provision of this Contract is determined to be void or unenforceable, all other provisions shall remain in full force and effect.

I. This Contract is subject to City Council approval.

J. The Contractor acknowledges, for itself and its SubContractors, that it is subject to the provisions of the 1991 Ethics Reform Act (8-13-100, et seq, South Carolina Code of Laws, 1976, as amended). Under this Act, "A person may not, directly or indirectly, give, offer, or promise anything of value to a public official, public member, or public employee with intent to:

1. influence the discharge of a public official's, public member's, or public employee's official responsibilities;

2. influence a public official, public member, or public employee to commit, aid in committing, collude in, or allow fraud on a governmental entity; or,

3. induce a public official, public member, or public employee to perform or fail to perform an act in violation of the public official's, public member's, or public employee's official responsibilities.

"Anything of value" includes, but is not limited to, lodging, transportation, entertainment, food, meals, beverages, money, gifts, honorariums, discounts and interest-free loans.

K. In carrying out services under this Contract, the Contractor shall not discriminate against any employee or applicant for employment because of race, color, religion, sex, sexual orientation or national origin. The Contractor shall take affirmative action to ensure equal employment opportunities for all applicants for employment, without regard to their race, creed, color, religion, ancestry, sex, sexual orientation, national origin, disability or other handicap, age, marital status, or status with regard to public

assistance. Such action shall include, but not be limited to, the following: employment, promotion, demotion, or transfer; recruitment or recruitment advertising; layoff or termination; rates of pay or other forms of compensation; and selection for training, including apprenticeship. The Contractor shall post in conspicuous places, available to employees and applicants for employment, notices setting forth the provisions of this nondiscrimination clause. The Contractor will incorporate these nondiscrimination requirements in all subcontracts for work under this Contract.

L. This Contract shall be binding upon the respondent and upon its successors and assignees. This Contract shall be binding upon the City in accordance with its terms and provisions.

M. All of the reports, information, data, records or documents of any kind, prepared or assembled by the Contractor under this Contract are matters of public record, but that the Contractor agrees that they shall only be made available to any individual or organization by the City and the Contractor shall not make them available to any individual or organization without the prior written approval of the City.

N. Every exhibit, schedule and appendix attached to this Contract and referred to herein is hereby incorporated into this Contract by reference unless this Contract expressly provides otherwise. This Contract, exhibits and other documents include, but are not limited to the Conflict of Interest Statement, Non-collusion Affidavit, Business Information Record for SubContractors/Subcontractors, Local Business Enterprise, and Mentor Protégé Implementation forms are incorporated by reference in this Contract and set forth the entire understanding between the parties hereto regarding the subject matter hereof.

O. The Contractor is responsible for using a termiticide in which the guaranteed can be renewable for up to (ten) 10 years. The Contractor may also use a baiting system in which the guarantee can be renewable for life.

P. The Contractor must conduct a walkthrough of buildings for the City of Columbia listed in Lots one (1) and two (2) prior to signing this agreement. The Contractor shall set up a specific date and time with the Support Services Representative.

Witness the parties' respective hands and seals on the date first written above.

CITY OF COLUMBIA, SOUTH CAROLINA

_____ _____ Date:_____

Witness Teresa Wilson, City Manager

ALL PHASE TERMITE AND PEST CONTROL

_____ _____ Date:_____

William L. Pate Jr. Signature

Recommended by:

_____ Date:_____

Kelvin Keisler, Support Services Director

_____ Date:_____

Clint Shealy, P.E., Assistant City Manager for Columbia Water

_____ Date:_____

Sandra A. Wright, CPPB, Purchasing Agent/Director
Department of Procurement and Contracts

APPROVED AS TO FORM

Legal Department City of Columbia, SC

List of Exhibits

Exhibit A – Statement of Work

Exhibit B – Compensation

Exhibit C – Business Information Record for Subconsultants/Subcontractors

Exhibit D – Prime Business Information Statement

Exhibit E – Invoicing Procedure

Statement of Work and Schedule: Exhibit A

Scope of Services

The City of Columbia is soliciting services for monthly pest control services and annual termite services. This maintenance and periodic eradication of rats, mice, ants, spiders, silverfish, and termites, as well as roaches and all other crawling and/or flying insects or pests in or around the City of Columbia's Buildings. For more information of the City of Columbia's building list, see Lot 1 and Lot 2 for a detailed listing.

The Contractor will be responsible for controlling and eliminating pest infestation. The Contractor will provide all services and materials that are required to eliminate any pest problems to the satisfaction of the City of Columbia.

Materials

The Contractor shall provide and include in the price all equipment, chemicals, labor and supplies required for the performance of this contract.

Application

1. All chemicals shall be applied in accordance with the manufacturers' recommendations. In addition, the City of Columbia will require the Contractors to provide Material Safety Data Sheet (MSDS) on all products used in or around the City of Columbia buildings with bid submittal.

2. Each employee who performs pest control must have a City of Columbia Identification Card.

3. Pesticide use shall consist of the least hazardous material, but most precise application technique and minimum quantity necessary to achieve control.

4. Pesticides shall not be stored on City of Columbia properties.

5. Pesticides shall never be applied when the facility HVAC system is not on.

6. Pesticides applied to the air must never be for routine treatment inside facilities. Pesticides must be applied only as containerized or crack and crevice treatments in which the applied treatment is never visible.

7. Insecticides shall be applied as solids, paste or gels where it is possible. Sprays or dust formulations shall only be used when baits are not practical.

8. The Contractor shall ensure the application of all pesticides and other pest control measurements are in accordance with federal, EPA and South Carolina Department of Agriculture regulations and guidelines; as well as any local ordinance as they apply to use of pest control.

9. At no time will unlicensed technicians apply pesticides or the application of chemicals within the City of Columbia buildings.

Contractor Requirements

1. The Contractor will measure the linear footage for each facility listed in Lot 2 being serviced for termite service and other wood destroying organisms within the first (1st) month of the Contract. The linear footage will be provided to the City of Columbia's Support Services Department representative.

2. In accordance with the City of Columbia's Holiday and Weekend Schedule, services will be provided on the first (1st) of each month or the next working day. Treatments shall be on consecutive days thereafter until completed on all City of Columbia's facilities. The Contractor shall visit each building once a month or as needed, if required to eliminate any pests.

3. An Emergency may require immediate service which needs to be responded within four (4) hours of when the call was first placed, 24 hours a day, 7 days a week.

4. In all City of Columbia's facilities, the Contractor shall schedule services during normal business hours or at mutually agreed times with the City of Columbia representative.

5. Only licensed uniformed technicians with at least (1) one-year of experience will be permitted to apply/treat City of Columbia's facilities. A copy of the Technicians state license must be provided to the City of Columbia's representative before providing services.

6. The Contractor shall have been in the pest control business that has a valid business license for at least five (5) years before this contract agreement and have adequate staff to meet the service requirements for the City of Columbia. A copy of the business license is required at the time of award.

7. The Contractor shall protect against overspray of application to ensure vehicles and property, including grass and plants are not impacted.

8. Pesticides used within City of Columbia's facilities will be of an odorless/low odor formulation for interior usage in public facilities.

9. The Contractor shall inspect, maintain and service the interior and exterior of the associated facility's for pest control services to include but not limited to the following: (10) Ten-foot perimeter around facility, loading docks, common areas, entrance ways, hallways, stairways, lunch rooms, kitchens, kitchenettes, restrooms, maintenance areas, dormitory area, trash collection areas, basement areas, mechanical rooms, utility areas, accessible structural voids, elevator rooms and exterior windows.

10. Metal trap and glue boards may be used wherever practical to prevent rodents from being exterminated in inaccessible places. Glue board and traps must be available on an "as-

needed" basis at no additional cost. Each service technician will have these items available at the time of service. Metal Traps and Glue Boards shall be checked at a minimum of once a week.

11. The Contractor will cover all of the City of Columbia's facilities interior and exterior to prevent and eliminate all types of pests and rodents including but not limited to rats, mice, spiders, ants, roaches, fleas, silverfish, centipedes, millipedes, earwigs, crickets, wasps, moths, gnats, fruit flies and all other common insects listed in Lot 1 and Lot 2.

12. Rodent bait shall be in receptacles so neither employees, nor the public, will come in contact with the materials used. Approved bait boxes will be used in all food areas in lieu of just glue boards. In addition to normal treatments if rodents are still present, additional treatments may be necessary during periods when the facilities are closed.

13. The Contractor shall submit a facility's report log after each visit to a facility. The facility's report log shall include the location, service person and the contact's name with the time, date and name of product or products used at the City of Columbia's facility. The facility report log shall cover existing conditions contributing to the pest activity as well as any recommendations to resolve pest activity. The Contractor shall submit a facility's report with the invoice after monthly visits.

14. All pest control Contractor personnel entering and servicing the City of Columbia's buildings will need to have a SLED background check and be "CJIS" Criminal Justice Information Services certified by City of Columbia Police Department at the Headquarters location. A copy of the law enforcement background and "CJIS" certification will be provided as part of the bid response.

15. The Contractor shall warrant against faulty workmanship, materials, and the performance and quality of the application for a period of one (1) year from substantial completion of the service.

Space Left Blank Intentionally

Lot #1 Pest Control of Multiple Sites for the City of Columbia (Monthly Pest & Rodent)							
Item No.	Buildings	Monthly Pest	Monthly Rodent	Approximate Square FT.	Year 1	Year 2	Year 3
1	City Hall - 1737 Main	Yes	Yes	35,000	$350.00	$350.00	$350.00
2	Washington SQ. - 1136 Washington	Yes	Yes	92,169	$350.00	$350.00	$350.00
3	Drew Wellness - 2101 Walker Solomon Way	Yes	Yes	40,000	$350.00	$350.00	$350.00
4	Municipal Court - 811 Washington	Yes	Yes	21,682	$350.00	$350.00	$350.00
5	Parking Offices - 820 Washington	Yes	Yes	3,894	$350.00	$350.00	$350.00
6	Parking Office Sumter St. Garage	Yes	Yes	600	$350.00	$350.00	$350.00
7	Parking Booth Sumter St. Garage (Lease)	Yes	Yes	100	$350.00	$350.00	$350.00
8	Parking Booth Lady St. Garage (Lease)	Yes	Yes	50	$350.00	$350.00	$350.00
9	Parking Booth Park St. Garage (Lease)	Yes	Yes	50	$350.00	$350.00	$350.00
10	Eau Claire - 3905 Ensor Ave	Yes	Yes	11,364	$350.00	$350.00	$350.00
11	Public Works - 2910 Colonial	Yes	Yes	47,097	$350.00	$350.00	$350.00
12	Fleet Services - 2910 Colonial	Yes	Yes	6,000	$350.00	$350.00	$350.00
13	Main St. 1800	Yes	Yes	25,981	$350.00	$350.00	$350.00
14	Lady St. - 1225 Lady (Lease)	Yes	Yes	41,633	$350.00	$350.00	$350.00
15	Laurel St. - 1219	Yes	Yes	1,600	$350.00	$350.00	$350.00
16	Support Services - 1924 Calhoun St.	Yes	Yes	2,450	$350.00	$350.00	$350.00
17	Support Services - 1924 Calhoun St. Storage	Yes	Yes	4,000	$350.00	$350.00	$350.00
18	Support Services - 1924 Calhoun St. Shop	Yes	Yes	2,000	$350.00	$350.00	$350.00
19	Records - 1900 Calhoun St.	Yes	Yes	5,750	$350.00	$350.00	$350.00
20	City Gym - 1632 Hampton St.	Yes	Yes	16,334	$350.00	$350.00	$350.00
21	Animal Services - 127 Human LN.	Yes	Yes	6,378	$350.00	$350.00	$350.00
22	Health Clinic - 2012 Harden St.	Yes	Yes	1,600	$350.00	$350.00	$350.00
23	Police HQ - 1 Justice SQ.	Yes	Yes	32,929	$350.00	$350.00	$350.00
24	Police Metro Region- 1600 Bull St.	Yes	Yes	2,400	$350.00	$350.00	$350.00
25	Police West Region - 690 Club RD.	Yes	Yes	1,600	$350.00	$350.00	$350.00
26	Police South Region - 2132 Devine St.	Yes	Yes	6,286	$350.00	$350.00	$350.00
27	Police East Region - 446 Spears Creek Church RD.	Yes	Yes	2,701	$350.00	$350.00	$350.00
28	Police Sub - 1735 Busby St.	Yes	Yes	1,450	$350.00	$350.00	$350.00
29	Police Sub - 715 Bluff RD. (Lease)	Yes	Yes	12,750	$350.00	$350.00	$350.00

30	Police Training - 900 Riverhill (Lease)	Yes	Yes	6,200	$350.00	$350.00	$350.00
31	Police Training - 1507-1511 Taylor St.	Yes	Yes	6,264	$350.00	$350.00	$350.00
32	Police Midlands Center 2638 Two Notch (Lease)	Yes	Yes	1,800	$350.00	$350.00	$350.00
33	Police 1001Harden St. (Lease)	Yes	Yes	1,200	$350.00	$350.00	$350.00
34	Police Koban - 2111 Lady St.	Yes	Yes	4,132	$350.00	$350.00	$350.00
35	Police Sub. - 1042 Adeline	Yes	Yes	2,682	$350.00	$350.00	$350.00
36	Fire HQ - 1800 Laurel St.	Yes	Yes	17,036	$350.00	$350.00	$350.00
37	Fire Training 1505 Taylor St.	Yes	Yes	2,000	$350.00	$350.00	$350.00
38	Fire Prevention - 1612 Bull St.	Yes	Yes	4,277	$350.00	$350.00	$350.00
39	Fire 2 - 1015 Ferguson St.	Yes	Yes	4,278	$350.00	$350.00	$350.00
40	Fire 3 - 2740 The Boulevard	Yes	Yes	5,326	$350.00	$350.00	$350.00
41	Fire Training Classrooms (2) - 2740 The Boulevard	Yes	Yes	1200	$350.00	$350.00	$350.00
42	Fire Training Tower - 2740 The Boulevard	Yes	Yes	1000	$350.00	$350.00	$350.00
43	Fire 4 - 446 Spears Creek Church Rd.	Yes	Yes	6,285	$350.00	$350.00	$350.00
44	Fire 6 - 1225 Briarsgate Cir.	Yes	Yes	4,500	$350.00	$350.00	$350.00
45	Fire 7 - 2622 Main St.	Yes	Yes	4,100	$350.00	$350.00	$350.00
46	Fire 8 - 153 Atlas Rd.	Yes	Yes	5,663	$350.00	$350.00	$350.00
47	Fire 9 - 2847 Devine St.	Yes	Yes	6,285	$350.00	$350.00	$350.00
48	Fire 11 - 30 Blume Ct.	Yes	Yes	6,348	$350.00	$350.00	$350.00
49	Fire 12 - 6810 N. Main St.	Yes	Yes	6,551	$350.00	$350.00	$350.00
50	Fire 13 - 4112 N. Main St.	Yes	Yes	6,285	$350.00	$350.00	$350.00
51	Fire 16 - 131 Lake Murray Blvd.	Yes	Yes	6,285	$350.00	$350.00	$350.00
52	Fire Logistics - 1901 Harden St.	Yes	Yes	8,481	$350.00	$350.00	$350.00
53	Water/Wastewater 4013 W. Beltline Blvd.	Yes	Yes	59,838	$350.00	$350.00	$350.00
54	Wastewater Plant - 1200 Simmon Tree Ln.	Yes	Yes	21,000	$350.00	$350.00	$350.00
55	Canal Plant - 300 Laurel St.	Yes	Yes	96,086	$350.00	$350.00	$350.00
56	Water DIST. 2 - 3884 Fernandina	Yes	Yes	3,000	$350.00	$350.00	$350.00
57	Water Dist. 3 - 808 North Springs Rd.	Yes	Yes	3,000	$350.00	$350.00	$350.00
58	Water DIST. 4 - 1815 Leesburg Rd.	Yes	Yes	3,000	$350.00	$350.00	$350.00
59	Water Dist. 5 - 2712 North Lake Dr.	Yes	Yes	3,000	$350.00	$350.00	$350.00
60	Lake Murray Water Plant - Rocky Point	Yes	Yes	53,995	$350.00	$350.00	$350.00
61	WWTP Maintenance Shop	Yes	Yes	16,422	$350.00	$350.00	$350.00
62	WWTP T1 RAS PS (2 floors)	Yes	Yes	2,414	$350.00	$350.00	$350.00
63	WWTP T1 Aeration Control Building (2 floors)	Yes	Yes	770	$350.00	$350.00	$350.00
64	WWTP T1 Blower Building	Yes	Yes	6,528	$350.00	$350.00	$350.00

65	WWTP Utility Building	Yes	Yes	1,612	$350.00	$350.00	$350.00
66	WWTP Chlorination & Dechloration Facility (Carport)	Yes	Yes	1,950	$350.00	$350.00	$350.00
67	WWTP Opeations Lab	Yes	Yes	650	$350.00	$350.00	$350.00
68	WWTP IPS	Yes	Yes	4,536	$350.00	$350.00	$350.00
69	WWTP PTF (2 floors)	Yes	Yes	7,520	$350.00	$350.00	$350.00
70	WWTP Compliance Trailer	Yes	Yes	1,500	$350.00	$350.00	$350.00
71	WWTP T2 Blower Building (2 floors)	Yes	Yes	3,120	$350.00	$350.00	$350.00
72	WWTP T2 RAS PS (2 floors)	Yes	Yes	2,100	$350.00	$350.00	$350.00
73	WWTP Storage Carport	Yes	Yes	1,620	$350.00	$350.00	$350.00
74	WWTP Septage Receiving Station	Yes	Yes	2,430	$350.00	$350.00	$350.00
75	WWTP Septage Receiving Station Carport	Yes	Yes	2,808	$350.00	$350.00	$350.00
76	WWTP NPW Pump Room	Yes	Yes	1,200	$350.00	$350.00	$350.00
77	WWTP Chlorination & Dechloration Pump Room	Yes	Yes	1,200	$350.00	$350.00	$350.00
78	WWTP Dewatering Building (5 floors)	Yes	Yes	3,082	$350.00	$350.00	$350.00
79	WWTP T1 Thicking (3 floors)	Yes	Yes	15,544	$350.00	$350.00	$350.00
80	WWTP T2 Thicking (2 floors)	Yes	Yes	15,525	$350.00	$350.00	$350.00
81	WWTP Headhouse 1 (2 floors)	Yes	Yes	1,247	$350.00	$350.00	$350.00
82	WWTP Headhouse 2 (2 floors)	Yes	Yes	1,247	$350.00	$350.00	$350.00
83	WWTP Headhouse 3 (2 floors)	Yes	Yes	1,247	$350.00	$350.00	$350.00
84	WWTP T1 Magnesium Hydroxide Building	Yes	Yes	3,000	$350.00	$350.00	$350.00
85	WWTP Boiler Building	Yes	Yes	4,520	$350.00	$350.00	$350.00
86	WWTP IPS/PTF - MCC Building	Yes	Yes	1,161	$350.00	$350.00	$350.00
87	WWTP T1 Primary Pump Gallery	Yes	Yes	2,150	$350.00	$350.00	$350.00
					YEAR 1	**YEAR 2**	**YEAR 3**
***Total Cost of Multiple sites for the City of Columbia as per specifications:**					**$30,450.00**	**$30,450.00**	**$30,450.00**

Lot #2 Termite of Multiple Sites for the City of Columbia						
Item No.	Buildings	Approximate Linear FT.	Treatment Type	YEAR 1 Initial Treatment Cost	YEAR 2 Annual Renewal Cost	YEAR 3 Annual Renewal Cost
1	City Hall - 1737 Main	Responsible by Vendor	Liquid Bait	$1,400.00	$250.00	$250.00
2	Washington SQ. - 1136 Washington	Responsible by Vendor	Liquid Bait	$1,400.00	$250.00	$250.00
3	Drew Wellness - 2101 Walker Solomon Way	Responsible by Vendor	Liquid Bait	$1,400.00	$250.00	$250.00
4	Municipal Court - 811 Washington	Responsible by Vendor	Liquid Bait	$1,400.00	$250.00	$250.00
5	Parking Offices - 820 Washington	Responsible by Vendor	Liquid Bait	$1,400.00	$250.00	$250.00
6	Parking Office Sumter St. Garage	Responsible by Vendor	Liquid Bait	$1,400.00	$250.00	$250.00
7	Eau Claire - 3905 Ensor Ave	Responsible by Vendor	Liquid Bait	$1,400.00	$250.00	$250.00
8	Public Works - 2910 Colonial	Responsible by Vendor	Liquid Bait	$1,400.00	$250.00	$250.00
9	Fleet Services - 2910 Colonial	Responsible by Vendor	Liquid Bait	$1,400.00	$250.00	$250.00
10	Main St. 1800	Responsible by Vendor	Liquid Bait	$1,400.00	$250.00	$250.00
11	Laurel St. - 1219	Responsible by Vendor	Liquid Bait	$1,400.00	$250.00	$250.00
12	Support Services - 1924 Calhoun St.	Responsible by Vendor	Liquid Bait	$1,400.00	$250.00	$250.00
13	Support Services - 1924 Calhoun St. Storage	Responsible by Vendor	Liquid Bait	$1,400.00	$250.00	$250.00
14	Support Services - 1924 Calhoun St. Shop	Responsible by Vendor	Liquid Bait	$1,400.00	$250.00	$250.00
15	Records - 1900 Calhoun St.	Responsible by Vendor	Liquid Bait	$1,400.00	$250.00	$250.00
16	City Gym - 1632 Hampton St.	Responsible by Vendor	Liquid Bait	$1,400.00	$250.00	$250.00
17	Animal Services - 127 Human LN.	Responsible by Vendor	Liquid Bait	$1,400.00	$250.00	$250.00
18	Health Clinic - 2012 Harden St.	Responsible by Vendor	Liquid Bait	$1,400.00	$250.00	$250.00
19	Police HQ - 1 Justice SQ.	Responsible by Vendor	Liquid Bait	$1,400.00	$250.00	$250.00

20	Police Metro Region- 1600 Bull St.	Responsible by Vendor	Liquid Bait	$1,400.00	$250.00	$250.00
21	Police West Region - 690 Club RD.	Responsible by Vendor	Liquid Bait	$1,400.00	$250.00	$250.00
22	Police South Region - 2132 Devine St.	Responsible by Vendor	Liquid Bait	$1,400.00	$250.00	$250.00
23	Police East Region - 446 Spears Creek Church RD.	Responsible by Vendor	Liquid Bait	$1,400.00	$250.00	$250.00
24	Police Sub - 1735 Busby St.	Responsible by Vendor	Liquid Bait	$1,400.00	$250.00	$250.00
25	Police Training - 1507-1511 Taylor St.	Responsible by Vendor	Liquid Bait	$1,400.00	$250.00	$250.00
26	Police Koban - 2111 Lady St.	Responsible by Vendor	Liquid Bait	$1,400.00	$250.00	$250.00
27	Police Sub. - 1042 Adeline	Responsible by Vendor	Liquid Bait	$1,400.00	$250.00	$250.00
28	Fire HQ - 1800 Laurel St.	Responsible by Vendor	Liquid Bait	$1,400.00	$250.00	$250.00
29	Fire Training 1505 Taylor St.	Responsible by Vendor	Liquid Bait	$1,400.00	$250.00	$250.00
30	Fire Prevention - 1612 Bull St.	Responsible by Vendor	Liquid Bait	$1,400.00	$250.00	$250.00
31	Fire 2 - 1015 Ferguson St.	Responsible by Vendor	Liquid Bait	$1,400.00	$250.00	$250.00
32	Fire 3 - 2740 The Boulevard	Responsible by Vendor	Liquid Bait	$1,400.00	$250.00	$250.00
33	Fire Training Classrooms (2) - 2740 The Boulavard	Responsible by Vendor	Liquid Bait	$1,400.00	$250.00	$250.00
34	Fire Training Tower - 2740 The Boulevard	Responsible by Vendor	Liquid Bait	$1,400.00	$250.00	$250.00
35	Fire 4 - 446 Spears Creek Church Rd.	Responsible by Vendor	Liquid Bait	$1,400.00	$250.00	$250.00
36	Fire 6 - 1225 Briarsgate Cir.	Responsible by Vendor	Liquid Bait	$1,400.00	$250.00	$250.00
37	Fire 7 - 2622 Main St.	Responsible by Vendor	Liquid Bait	$1,400.00	$250.00	$250.00
38	Fire 8 - 153 Atlas Rd.	Responsible by Vendor	Liquid Bait	$1,400.00	$250.00	$250.00
39	Fire 9 - 2847 Devine St.	Responsible by Vendor	Liquid Bait	$1,400.00	$250.00	$250.00
40	Fire 11 - 30 Blume Ct.	Responsible by Vendor	Liquid Bait	$1,400.00	$250.00	$250.00
41	Fire 12 - 6810 N. Main St.	Responsible by Vendor	Liquid Bait	$1,400.00	$250.00	$250.00
42	Fire 13 - 4112 N.Main St.	Responsible by Vendor	Liquid Bait	$1,400.00	$250.00	$250.00

43	Fire 16 - 131 Lake Murry Blvd.	Responsible by Vendor	Liquid Bait	$1,400.00	$250.00	$250.00
44	Fire Logistics - 1901 Harden St.	Responsible by Vendor	Liquid Bait	$1,400.00	$250.00	$250.00
45	Water/Wastewater 4013 W.Beltline blvd.	Responsible by Vendor	Liquid Bait	$1,400.00	$250.00	$250.00
46	Wastewater Plant - 1200 Simmon Tree Ln.	Responsible by Vendor	Liquid Bait	$1,400.00	$250.00	$250.00
47	Canal Plant - 300 Laurel St.	Responsible by Vendor	Liquid Bait	$1,400.00	$250.00	$250.00
48	Water DIST. 2 - 3884 Fernandina	Responsible by Vendor	Liquid Bait	$1,400.00	$250.00	$250.00
49	Water Dist. 3 - 808 North Springs Rd.	Responsible by Vendor	Liquid Bait	$1,400.00	$250.00	$250.00
50	Water DIST. 4 - 1815 Leesburg Rd.	Responsible by Vendor	Liquid Bait	$1,400.00	$250.00	$250.00
51	Water Dist. 5 - 2712 North Lake Dr.	Responsible by Vendor	Liquid Bait	$1,400.00	$250.00	$250.00
52	Lake Murry Water Plant - Rocky Point	Responsible by Vendor	Liquid Bait	$1,400.00	$250.00	$250.00
53	WWTP Compliance Trailer	Responsible by Vendor	Liquid Bait	$1,400.00	$250.00	$250.00
				YEAR 1	YEAR 2	YEAR 3
*Total Cost of Multiple sites for the City of Columbia as per specifications:				$74,200.00	$13,250.00	$13,250.00

Total Costs Including Lot 1 & Lot 2 By Year

QUANTITIES/COMMODITIES, OR SERVICES	UNIT PRICE DOLLAR CENTS*
Lot 1-Pest Control of Multiple Sites for the City of Columbia as per specifications.	$30,450.00
Lot 2- Pest Control (Termite) of Multiple Sites for the City of Columbia as per specifications.	$74,200.00
Year 1 Total:	**$104,650.00**

QUANTITIES/COMMODITIES, OR SERVICES	UNIT PRICE DOLLAR CENTS*
Lot 1-Pest Control of Multiple Sites for the City of Columbia as per specifications.	$30,450.00
Lot 2- Pest Control (Termite) of Multiple Sites for the City of Columbia as per specifications.	$13,250.00
Year 2 Total:	**$43,700.00**

QUANTITIES/COMMODITIES, OR SERVICES	UNIT PRICE DOLLAR CENTS*
Lot 1-Pest Control of Multiple Sites for the City of Columbia as per specifications.	$30,450.00
Lot 2- Pest Control (Termite) of Multiple Sites for the City of Columbia as per specifications.	$13,250.00
Year 3 Total:	**$43,700.00**

SPORT COURT Carolina

SC Contractor License CLG.122093

CONNOR SPORTS

Sport Court Carolina, Inc.
418 Crompton Street
Charlotte, NC 28273
Office: 704-926-4072
Cell: 704-239-4900

Sourcewell ID # 082114-CSC"

August 8, 2019

City of Columbia - Parks and Recreation Department
Attn: Chris Campbell 803-391-1285
Columbia, SC

YOUR SPORT, OUR COURT. SINCE 1974.

We propose to furnish and install the following:

Pinehurst Park
2300 Pinehurst Rd
Columbia, SC 29204
Gym Floor - 103' 10" x 77'10" +-8,112 sq. ft.

- Install Defense floor per manufactures spec.
- Paint game lines for Regulation High basketball & main volleyball court.
- Minor floor prep & leveling concrete 2 bags included.
- 3mm Rubber Underlayment
- 4" Black Rubber Wall Base.
- Transition at all door openings as required.
- Installation labor & materials to complete.
- Freight & delivery

Base Bid Total: $67,523.75

Upgrade to 5mm rubber underlayment. $3,816.00

Remove old floor: $4,542.00 Labor

Dumpster & disposal fees: $1,600.00

Total with removal and 5mm upgrade: $77,481.75

Exclusions:

- Price does not include trimming doors if required.
- Price does not include major floor prep, leveling, cleaning or protection after installation.
- Price does not include electrical work.

Continued next page

SPORT COURT Carolina

SC Contractor License CLG.122093

CONNOR SPORTS

All material is guaranteed to be as specified, and all the above will be in accordance with the owner's specifications. All work will be performed in a substantial workman like manner. Any alteration or deviation from specifications above involving extra costs will be executed only upon written orders and will become an extra charge over and above the estimate. All elements of this agreement are contingent upon strikes, accidents, or delays beyond our control. The estimate does not include material price increases, or additional labor and materials that may be required should unforeseen problems arise after the work has started. Owner of the property is responsible for carrying fire, tornado, flood and other necessary insurance. Our workers are fully covered by Workman's Compensation Insurance.

Respectfully Submitted By: Dave Barbee Sport Court Carolina, Inc. 8/8/19

This proposal may be withdrawn if not accepted within **30 days**.

~~Note: This proposal is a legal and binding contract. No cancellations may be made. If cancelled, a 25% restocking or processing fee may be charged at the determination of Sport Court Carolina, Inc. Monthly finance charges may be applied to past due accounts.~~ DT

Terms – A deposit of 35% will be paid upon acceptance of this contract with progress payments as work progresses; balance within 15 days of completion, 1.5% penalty every month thereafter. ~~Quoted prices are based on cash payment. Purchase orders accepted with approved credit.~~ DT
~~Credit Card: If paying by credit card there will be a 3% surcharge to the total amount of the contract.~~

Acceptance of Proposal - The above prices, specifications and conditions are satisfactory and are hereby accepted. You are authorized to do the work as specified.

Name _____

Signature_____Date_____

APPROVED AS TO FORM
Legal Department, City of Columbia, SC

CONNOR SPORT COURT INTERNATIONAL

CONNOR SPORTS
Where Champions Play

SPORT COURT

5445 W. Harold Gatty Drive • Salt Lake City, UT 84116

January 7, 2019

To Whom It May Concern:

This letter is to confirm that **Sport Court Carolina,** from Charlotte, NC is an authorized dealer with Connor Sport Court International, and has been trained on the requirements of, and meets the pricing criteria for, the cooperative-purchasing agreement (#060518-CSC) between Connor Sport Court International and Sourcewell.

Your representative from Sport Court should be able to answer any questions you have, but please let me know if you have any additional questions or concerns.

Best regards,

Joel McCausland
Director, Training and Sales Support
801-401-3501
jmccausland@connorsportcourt.com

DocuSign Envelope ID: 7E819A0E-EE83-4DEF-8C10-ECD2A4F0DCBA

FORM E

CONTRACT ACCEPTANCE AND AWARD

(Top portion of this form will be completed by Sourcewell if the vendor is awarded a contract. The vendor should complete the vendor authorized signatures as part of the RFP response.)

Sourcewell Contract #: 060518-CSC

Proposer's full legal name: Connor Sport Court International LLC

Based on Sourcewell's evaluation of your proposal, you have been awarded a contract. As an awarded vendor, you agree to provide the products and services contained in your proposal and to meet all of the terms and conditions set forth in this RFP, in any amendments to this RFP, and in any exceptions that are accepted by Sourcewell.

The effective date of the Contract will be August 7, 2018 and will expire on August 7, 2022 (no later than the later of four years from the expiration date of the currently awarded contract or four years from the date that the Sourcewell Chief Procurement Officer awards the Contract). This Contract may be extended for a fifth year at Sourcewell's discretion.

Sourcewell Authorized Signatures:

Jeremy Schwartz
SOURCEWELL DIRECTOR OF OPERATIONS AND PROCUREMENT/CPO SIGNATURE

Jeremy Schwartz
(NAME PRINTED OR TYPED)

Chad Coauette
SOURCEWELL EXECUTIVE DIRECTOR/CEO SIGNATURE

Chad Coauette
(NAME PRINTED OR TYPED)

Awarded on August 3, 2018

Sourcewell Contract # 060518-CSC

Vendor Authorized Signatures:

The Vendor hereby accepts this Contract award, including all accepted exceptions and amendments.

Vendor Name CONNOR SPORT COURT INTERNATIONAL, LLC

Authorized Signatory's Title CHIEF SALES & MKTG. OFFICER

VENDOR AUTHORIZED SIGNATURE

BENJAMIN BACHMAN
(NAME PRINTED OR TYPED)

Executed on Aug. 20, 2018

Sourcewell Contract # 060518-CSC

SPORT COURT® DEFENSE™

SECTION 09624 - MODULAR ATHLETIC FLOORING

PART 1 - GENERAL

1.1 DESCRIPTION

A. Scope
   1. The complete installation of modular sports surfacing system including the interlocking suspended high-impact polypropylene copolymer tile of proprietary formulation, supportive acoustical/resilient underlayment and striping.

B. Related work specified under other sections.
   1. CONCRETE SUBFLOORS - SECTION 03_ _ _
      a. The general contractor shall furnish and install the concrete subfloors.
      b. The slab shall be steel troweled to a medium-dense finish to a tolerance of ±1/8" (3.2mm) in any 10' (3m) radius. Floor Flatness and Floor Levelness (FF and FL) numbers are not recognized. High spots shall be ground level and low spots filled with approved leveling compound.
   2. GAME STANDARD INSERTS - SECTION 11_ _ _

1.2 REFERENCES

A. ASTM (American Society for Testing & Materials)
   1. ASTM G-21

1.3 SUBMITTALS

A. Sport Court® Defense™ Specifications.
B. One sample of specified system, if requested by Architect.
C. Sport Court Modular Sports Flooring Installation Guide.
D. Sport Court Modular Sports Flooring Care and Maintenance Guide.
E. Sport Court Defense Warranty.

1.4 QUALITY ASSURANCE

A. MATERIAL SUPPLIER:
   1. Shall be Connor Sport Court International, Inc. (manufacturer).
   2. Manufacturer must be ISO 9001:2008 and ISO 14001:2004 Certified to assure proper quality and environmental control.
   3. Manufacturer shall be a Zero Waste company.
   4. Manufacturer shall have produced sports surfaces for a longer period of time than their stated warranty.
   5. Surfaces must be certified for competition by the international federations for basketball (FIBA), volleyball (FIVB), handball (IHF) and badminton (BWF).

B. INSTALLER:
   1. The complete installation of the flooring system as described in these specifications shall be carried out by an experienced installer (Flooring Contractor), and the work shall be performed in accordance with current Sport Court installation instructions.
   2. Installer (Flooring Contractor) shall be liable for all matters related to installation for a period of one year after the floor has been substantially installed and completed.
   3. Successful bidder must submit a minimum of five (5) completed modular projects of similar magnitude and complexity within the last two (2) years.
   4. Bidder must provide all sample tile, accessory products, and documentation.

1.5 DELIVERY, STORAGE AND HANDLING

A. Materials must be delivered in manufacturer's original, unopened and undamaged packaging with identification labels intact.
B. Store material on a clean, dry, and flat surface, protected from exposure to harmful weather conditions or possible damage.
C. Storage conditions shall be 55°F to 80°F (13°C to 27°C).

1.6 SITE CONDITIONS

A. In order to prevent damage and not void the warranty, installation of modular materials shall not

commence until all other finishes and overhead mechanical trades have completed their work in the modular floor areas.

B. Permanent heat, light and ventilation shall be installed and operating during and after installation.
C. Subfloors shall be clean, dry and free from dirt, dust, oil, grease, paint, old adhesive residue or other foreign materials.
D. Flooring installation shall not begin until the levelness requirements of concrete subfloors have been met.
E. The installation area shall be closed to all traffic and activity for a period to be set by the flooring contractor.
F. Product shall be conditioned at temperatures between 55°F to 80°F (13°C to 27°C) and shall be maintained for 72 hours prior to, during, and 72 hours after installation.
G. Environmental Limitations
   1. Comply with the Sport Court requirements.
   2. Adhere to all MSDS requirements for materials employed in the work.
   3. Protect all persons from exposure to hazardous materials at all times.
H. After modular floors are installed and the game lines painted, the area is to be closed to allow curing time for the system, typically 3-5 days. No other trades or personnel are allowed on the floor until it has been accepted by the owner.

1.7 WARRANTY

A. Sport Court provides a limited warranty of fifteen (15) years on the materials it has supplied. (A copy of the full warranty, with its Terms and Exclusions, is available from the authorized Sport Court Dealer.) This 15-Year Limited Warranty is subject to the Indoor Modular Flooring Warranty and all of its provisions. This warranty is expressly limited to the flooring materials (goods) supplied by Sport Court. During the period covered under this Indoor Modular Flooring Warranty, Sport Court shall repair/replace any defective tiles with the same or substantially similar product according to the schedule in the Indoor Modular Flooring Warranty. The Indoor Modular Flooring Warranty does not cover floor damage caused (wholly or in part) by fire, winds, floods, moisture, other unfavorable atmospheric conditions or chemical action, nor does it apply to damage caused by ordinary wear, misuse, abuse, negligent or intentional misconduct, aging, faulty building construction, concrete slab separation, faulty or unsuitable subsurface or site preparation, settlement of the building walls or faulty or unprofessional installation of Sport Court flooring systems.

B. Sport Court shall not be liable for incidental or consequential losses, damages or expenses directly or indirectly arising from the sale, handling or use of the materials (goods) or from any other cause relating thereto, and their liability hereunder in any case is expressly limited to the replacement of materials (goods) not complying with this agreement or, at their election, to the repayment of, or crediting buyer with, an amount equal to the purchase price of such materials (goods), whether such claims are for breach of warranty or negligence. Any claim shall be deemed waived by buyer unless submitted to Sport Court in writing within 30 days from the date buyer discovered, or should have discovered, any claimed breach.

SPORT COURT® DEFENSE™

PART 2 - PRODUCTS

2.1 MATERIALS

A. Sport Court Defense™ Patented Suspended Flooring shall be:
   1. Solid-top design.
   2. Size: 12" x 12" x 1/2" (30.48cm x 30.48cm x 12.7mm).
   3. High-impact polypropylene copolymer suspended modules.
   4. Equilateral triangle support structure.
   5. The tile shall have a patented positive locking system.

B. Standard Colors: Pearl Gold, Pearl Burgundy, Pearl Royal Blue, Ice Blue, Silver, Ultra Red, Black, Pearl Graphite, Pearl Beige, Pearl Evergreen, Pearl Navy Blue, Pearl Orange, Pearl Shamrock Green, Pearl Purple, Pearl Silver Blue, Yellow

C. Color Consistency: $\Delta ECMC < 1.0$

D. Weight - 0.82 ± 0.01 lbs. (372 ± 5 grams).

E. Packaging: Product is shipped in pre-assembled sheets (2x4 modules per sheet, 6 sheets per box).

F. Product Test Results
   1. Flatness: 0.0" +0.029" /-0.0" (0.0mm +0.74mm /-0.0mm)
   2. Lateral Forgiveness™: +0.045" / -0.0" (+1.14mm / -0.0mm)

G. Load Bearing Capacity: 220 psi (1.52 MPa)

H. Dynamic Load: All systems must be able to show verification of passing a minimum 1,000,000 cycles in dynamic load testing with minimum 200 lbs. (91 kg) loading without deviation from flatness specification.

I. Underlayment – Multi-purpose recycled rubber underlayment having a thickness of 0.06" (1.5mm), 0.12" (3mm), 0.20" (5mm), or 0.28" (7mm), and a Durometer of 60 ± 5 on the Shore A scale.

J. Retrofit – existing floor systems, such as synthetic floors, must not exceed a maximum thickness of 0.35" (9mm). Product must have a minimum durometer of 60 ± 5 on the Shore A scale. Flooring representative shall verify that the existing floor system meets these requirements by submitting core samples to the respective manufacturer for analysis and approval.

K. Sanitary Information
   1. Resistance to fungi (when tested in compliance with ASTM G-21 and MIL standard 810-D procedure 508.3). All basic organisms tested (ATCC #6205-11797) and were found to have zero growth.
   2. Resistance to the following:
      a. Bacteria and mildew resistance
      b. Gram-positive bacterial Staphylococcus Aureus
      c. Gram-negative Klebsiella Pneumoniae
      d. Pink-staining organism
      e. STV Reticulum
      f. Surface fungi growth prior to and following leaching

L. Game Line Paint
   1. Sport Court adhesion promoter – proprietary adhesion promoter as supplied by Sport Court.
   2. Paint – aliphatic polyurethane as supplied by Sport Court. Select from standard colors.

PART 3 - EXECUTION

3.1 INSPECTION

A. Inspect concrete slab for contamination, dryness and levelness. Report any discrepancies to the general contractor.
B. Concrete slab shall be broom cleaned, mopped and dust free by the general contractor.
C. Installer (Flooring Contractor) shall document all working conditions as specified in PART 1 – GENERAL prior to starting installation. Report any discrepancies to the general contractor.

3.2 INSTALLATION

A. Underlayment – Rubber underlayment shall be unrolled and allowed to relax. All butt joints shall be properly trimmed, fitted, and seamed together with an approved all-purpose tape.
B. Floor shall be installed to the pre-approved layout.
C. Proper expansion must be at all vertical obstructions minimum of ¾ Inch (19mm).
D. Floor surface shall be clean and dust free.
E. Game Lines
    1. Use only high quality masking tape approved by Sport Court.
    2. Lines shall be primed and painted using Sport Court proprietary adhesion promoter and recommended aliphatic polyurethane paint.
    3. Provide game lines as indicated on drawings.
    4. Room temperature shall be >55°F (13°C) and rising during paint installation.
F. Wall Base (optional) - Install cove base anchored to walls with base cement.
G. Remove all excess and waste materials from the area of work. Dispose of empty containers in accordance with federal and local statutes.

END OF SECTION 09624

CONNOR SPORT COURT INTERNATIONAL

CONNOR SPORTS
Where Champions Play®

SPORT COURT

5445 W. Harold Gatty Drive • Salt Lake City, UT 84116

January 7, 2019

To Whom It May Concern:

This letter is to confirm that **Sport Court Carolina,** from Charlotte, NC is an authorized dealer with Connor Sport Court International, and has been trained on the requirements of, and meets the pricing criteria for, the cooperative-purchasing agreement (#060518-CSC) between Connor Sport Court International and Sourcewell.

Your representative from Sport Court should be able to answer any questions you have, but please let me know if you have any additional questions or concerns.

Best regards,

Joel McCausland
Director, Training and Sales Support
801-401-3501
jmccausland@connorsportcourt.com

DocuSign Envelope ID: 1EB18A0E-EE83-4DEF-8C10-ECD2A4F0DCBA

FORM E

CONTRACT ACCEPTANCE AND AWARD

SERVING GOVERNMENT AND EDUCATION
Sourcewell
Formerly NJPA

(Top portion of this form will be completed by Sourcewell if the vendor is awarded a contract. The vendor should complete the vendor authorized signatures as part of the RFP response.)

Sourcewell Contract #: 060518-CSC

Proposer's full legal name: Connor Sport Court International LLC

Based on Sourcewell's evaluation of your proposal, you have been awarded a contract. As an awarded vendor, you agree to provide the products and services contained in your proposal and to meet all of the terms and conditions set forth in this RFP, in any amendments to this RFP, and in any exceptions that are accepted by Sourcewell.

The effective date of the Contract will be August 7, 2018 and will expire on August 7, 2022 (no later than the later of four years from the expiration date of the currently awarded contract or four years from the date that the Sourcewell Chief Procurement Officer awards the Contract). This Contract may be extended for a fifth year at Sourcewell's discretion.

Sourcewell Authorized Signatures:

Jeremy Schwartz
SOURCEWELL DIRECTOR OF OPERATIONS AND PROCUREMENT/CPO SIGNATURE

Jeremy Schwartz
(NAME PRINTED OR TYPED)

Chad Coauette
SOURCEWELL EXECUTIVE DIRECTOR/CEO SIGNATURE

Chad Coauette
(NAME PRINTED OR TYPED)

Awarded on August 3, 2018

Sourcewell Contract # 060518-CSC

Vendor Authorized Signatures:

The Vendor hereby accepts this Contract award, including all accepted exceptions and amendments.

Vendor Name CONNOR SPORT COURT INTERNATIONAL, LLC

Authorized Signatory's Title CHIEF SALES & MKTG. OFFICER

B. B
VENDOR AUTHORIZED SIGNATURE

BENJAMIN BACHMAN
(NAME PRINTED OR TYPED)

Executed on Aug. 20, 2018

Sourcewell Contract # 060518-CSC

SPORT COURT® DEFENSE™

SECTION 09624 - MODULAR ATHLETIC FLOORING

PART 1 - GENERAL

1.1 DESCRIPTION

A. Scope
   1. The complete installation of modular sports surfacing system including the interlocking suspended high-impact polypropylene copolymer tile of proprietary formulation, supportive acoustical/resilient underlayment and striping.

B. Related work specified under other sections.
   1. CONCRETE SUBFLOORS - SECTION 03_ _ _
      a. The general contractor shall furnish and install the concrete subfloors.
      b. The slab shall be steel troweled to a medium-dense finish to a tolerance of ±1/8" (3.2mm) in any 10' (3m) radius. Floor Flatness and Floor Levelness (FF and FL) numbers are not recognized. High spots shall be ground level and low spots filled with approved leveling compound.
   2. GAME STANDARD INSERTS - SECTION 11_ _ _

1.2 REFERENCES

A. ASTM (American Society for Testing & Materials)
   1. ASTM G-21

1.3 SUBMITTALS

A. Sport Court® Defense™ Specifications.
B. One sample of specified system, if requested by Architect.
C. Sport Court Modular Sports Flooring Installation Guide.
D. Sport Court Modular Sports Flooring Care and Maintenance Guide.
E. Sport Court Defense Warranty.

1.4 QUALITY ASSURANCE

A. MATERIAL SUPPLIER:
   1. Shall be Connor Sport Court International, Inc. (manufacturer).
   2. Manufacturer must be ISO 9001:2008 and ISO 14001:2004 Certified to assure proper quality and environmental control.
   3. Manufacturer shall be a Zero Waste company.
   4. Manufacturer shall have produced sports surfaces for a longer period of time than their stated warranty.
   5. Surfaces must be certified for competition by the international federations for basketball (FIBA), volleyball (FIVB), handball (IHF) and badminton (BWF).

B. INSTALLER:
   1. The complete installation of the flooring system as described in these specifications shall be carried out by an experienced installer (Flooring Contractor), and the work shall be performed in accordance with current Sport Court installation instructions.
   2. Installer (Flooring Contractor) shall be liable for all matters related to installation for a period of one year after the floor has been substantially installed and completed.
   3. Successful bidder must submit a minimum of five (5) completed modular projects of similar magnitude and complexity within the last two (2) years.
   4. Bidder must provide all sample tile, accessory products, and documentation.

1.5 DELIVERY, STORAGE AND HANDLING

A. Materials must be delivered in manufacturer's original, unopened and undamaged packaging with identification labels intact.
B. Store material on a clean, dry, and flat surface, protected from exposure to harmful weather conditions or possible damage.
C. Storage conditions shall be 55°F to 80°F (13°C to 27°C).

1.6 SITE CONDITIONS

A. In order to prevent damage and not void the warranty, installation of modular materials shall not

commence until all other finishes and overhead mechanical trades have completed their work in the modular floor areas.

B. Permanent heat, light and ventilation shall be installed and operating during and after installation.
C. Subfloors shall be clean, dry and free from dirt, dust, oil, grease, paint, old adhesive residue or other foreign materials.
D. Flooring installation shall not begin until the levelness requirements of concrete subfloors have been met.
E. The installation area shall be closed to all traffic and activity for a period to be set by the flooring contractor.
F. Product shall be conditioned at temperatures between 55°F to 80°F (13°C to 27°C) and shall be maintained for 72 hours prior to, during, and 72 hours after installation.
G. Environmental Limitations
   1. Comply with the Sport Court requirements.
   2. Adhere to all MSDS requirements for materials employed in the work.
   3. Protect all persons from exposure to hazardous materials at all times.
H. After modular floors are installed and the game lines painted, the area is to be closed to allow curing time for the system, typically 3-5 days. No other trades or personnel are allowed on the floor until it has been accepted by the owner.

1.7 WARRANTY

A. Sport Court provides a limited warranty of fifteen (15) years on the materials it has supplied. (A copy of the full warranty, with its Terms and Exclusions, is available from the authorized Sport Court Dealer.) This 15-Year Limited Warranty is subject to the Indoor Modular Flooring Warranty and all of its provisions. This warranty is expressly limited to the flooring materials (goods) supplied by Sport Court. During the period covered under this Indoor Modular Flooring Warranty, Sport Court shall repair/replace any defective tiles with the same or substantially similar product according to the schedule in the Indoor Modular Flooring Warranty. The Indoor Modular Flooring Warranty does not cover floor damage caused (wholly or in part) by fire, winds, floods, moisture, other unfavorable atmospheric conditions or chemical action, nor does it apply to damage caused by ordinary wear, misuse, abuse, negligent or intentional misconduct, aging, faulty building construction, concrete slab separation, faulty or unsuitable subsurface or site preparation, settlement of the building walls or faulty or unprofessional installation of Sport Court flooring systems.
B. Sport Court shall not be liable for incidental or consequential losses, damages or expenses directly or indirectly arising from the sale, handling or use of the materials (goods) or from any other cause relating thereto, and their liability hereunder in any case is expressly limited to the replacement of materials (goods) not complying with this agreement or, at their election, to the repayment of, or crediting buyer with, an amount equal to the purchase price of such materials (goods), whether such claims are for breach of warranty or negligence. Any claim shall be deemed waived by buyer unless submitted to Sport Court in writing within 30 days from the date buyer discovered, or should have discovered, any claimed breach.

SPORT COURT® DEFENSE™

PART 2 - PRODUCTS

2.1 MATERIALS

A. Sport Court Defense™ Patented Suspended Flooring shall be:
   1. Solid-top design.
   2. Size: 12" x 12" x 1/2" (30.48cm x 30.48cm x 12.7mm).
   3. High-impact polypropylene copolymer suspended modules.
   4. Equilateral triangle support structure.
   5. The tile shall have a patented positive locking system.

B. Standard Colors: Pearl Gold, Pearl Burgundy, Pearl Royal Blue, Ice Blue, Silver, Ultra Red, Black, Pearl Graphite, Pearl Beige, Pearl Evergreen, Pearl Navy Blue, Pearl Orange, Pearl Shamrock Green, Pearl Purple, Pearl Silver Blue, Yellow

C. Color Consistency: $\Delta ECMC < 1.0$

D. Weight - 0.82 ± 0.01 lbs. (372 ± 5 grams).

E. Packaging: Product is shipped in pre-assembled sheets (2x4 modules per sheet, 6 sheets per box).

F. Product Test Results
   1. Flatness: 0.0" +0.029" /-0.0" (0.0mm +0.74mm /-0.0mm)
   2. Lateral Forgiveness™: +0.045" / -0.0" (+1.14mm / -0.0mm)

G. Load Bearing Capacity: 220 psi (1.52 MPa)

H. Dynamic Load: All systems must be able to show verification of passing a minimum 1,000,000 cycles in dynamic load testing with minimum 200 lbs. (91 kg) loading without deviation from flatness specification.

I. Underlayment – Multi-purpose recycled rubber underlayment having a thickness of 0.06" (1.5mm), 0.12" (3mm), 0.20" (5mm), or 0.28" (7mm), and a Durometer of 60 ± 5 on the Shore A scale.

J. Retrofit – existing floor systems, such as synthetic floors, must not exceed a maximum thickness of 0.35" (9mm). Product must have a minimum durometer of 60 ± 5 on the Shore A scale. Flooring representative shall verify that the existing floor system meets these requirements by submitting core samples to the respective manufacturer for analysis and approval.

K. Sanitary Information
   1. Resistance to fungi (when tested in compliance with ASTM G-21 and MIL standard 810-D procedure 508.3). All basic organisms tested (ATCC #6205-11797) and were found to have zero growth.
   2. Resistance to the following:
      a. Bacteria and mildew resistance
      b. Gram-positive bacterial Staphylococcus Aureus
      c. Gram-negative Klebsiella Pneumoniae
      d. Pink-staining organism
      e. STV Reticulum
      f. Surface fungi growth prior to and following leaching

L. Game Line Paint
   1. Sport Court adhesion promoter – proprietary adhesion promoter as supplied by Sport Court.
   2. Paint – aliphatic polyurethane as supplied by Sport Court. Select from standard colors.

PART 3 - EXECUTION

3.1 INSPECTION

A. Inspect concrete slab for contamination, dryness and levelness. Report any discrepancies to the general contractor.
B. Concrete slab shall be broom cleaned, mopped and dust free by the general contractor.
C. Installer (Flooring Contractor) shall document all working conditions as specified in PART 1 – GENERAL prior to starting installation. Report any discrepancies to the general contractor.

3.2 INSTALLATION

A. Underlayment – Rubber underlayment shall be unrolled and allowed to relax. All butt joints shall be properly trimmed, fitted, and seamed together with an approved all-purpose tape.
B. Floor shall be installed to the pre-approved layout.
C. Proper expansion must be at all vertical obstructions minimum of ¾ inch (19mm).
D. Floor surface shall be clean and dust free.
E. Game Lines
    1. Use only high quality masking tape approved by Sport Court.
    2. Lines shall be primed and painted using Sport Court proprietary adhesion promoter and recommended aliphatic polyurethane paint.
    3. Provide game lines as indicated on drawings.
    4. Room temperature shall be >55°F (13°C) and rising during paint installation.
F. Wall Base (optional) - Install cove base anchored to walls with base cement.
G. Remove all excess and waste materials from the area of work. Dispose of empty containers in accordance with federal and local statutes.

END OF SECTION 09624

American Ramp Company
Owens Field Park Pump Track

AGREEMENT FOR PROFESSIONAL SERVICES

This Agreement is being awarded under procurement method RFP001-19-20-NMJ Owens Field Park Pump Track.

1. **PURPOSE** – This Agreement is entered into as of the date of the last signature affixed hereto, by and between the City of Columbia, South Carolina (hereinafter referred to as the "City") and American Ramp Company, (hereinafter referred to as the "Contractor"), to provide deliverables for pump track design and construction for Owens Field Park Pump Track for the City of Columbia, SC.

   For and in consideration of the mutual covenants and promises contained herein, the parties agree as follows:

2. **SCOPE OF SERVICES** – Upon written notification by the City to proceed, the Contractor shall provide the scope of services more fully described in Exhibit A, attached hereto. The Contractor shall perform any and all incidental services not specifically set forth in Exhibit A, which are necessary to fully complete the scope of services described in Exhibit A.

3. **SUPPLEMENTAL OR ADDITIONAL SERVICES** – The City may require supplemental or additional services of the Contractor or recommended by the Contractor and approved by the City in writing.

   The Contractor must obtain written approval from the City for any supplemental or additional services prior to the work being performed. If the Contractor fails to obtain prior written approval to perform the work, the City is under no obligation to compensate the Contractor for services performed.

4. **TERM OF AGREEMENT** – The term of the Agreement is the date of the execution of a Notice to Proceed. This Agreement shall expire, unless terminated earlier as provided for herein, on April 30, 2020, or at such time total compensation provided for herein is reached, whichever is later.

   The decision whether to extend the Agreement, upon written request, shall be the sole and exclusive discretion of the City and neither party shall be under any obligation to agree to an extension of the initial term or any additional term.

5. **SCHEDULE FOR COMPLETION OF SERVICES** – The Contractor shall complete any and all services performed under this Agreement within the timeframes as outlined in Exhibit B, attached hereto.

6. **COMPENSATION** – (See Exhibit A)

   A. The total compensation to be paid by the City to the Contractor under this Agreement shall not exceed Ninety-Five Thousand, Eight Hundred Ninety-Eight Dollars and No/100 ($95,898.00).

   B. The Contractor shall submit invoices no more frequently than monthly for services rendered during each phase of the Project. Each invoice submitted must describe the services for which payment is requested, show payment calculations and specify the person(s) rendering such service(s). Contractor must invoice monthly regardless of work being completed during that period. If no work is completed, a zero balance invoice should be submitted. **Each invoice must also clearly identify any portion of the fee invoiced for subcontracted services, including any such services that are specified in the Summary of Proposed Subconsultants shown on Exhibit C hereto.** Each invoice shall bear the signature of the Contractor, whose signature shall certify that the information contained in the invoice is true and accurate and

that the invoice amount is currently due and owing. The City will not pay interest or penalty on any past due amount.

C. Invoicing Procedure (See Exhibit D)

Failure of the Contractor to follow these invoice requirements will result in the delay of payment of the invoice.

D. Prompt Payment to Subconsultants and Material Suppliers (Use Prompt Payment Affidavit Exhibit E)

1. The Contractor is required to pay all Subconsultants and material suppliers for all work that the Subconsultant has satisfactorily completed, no later than twenty (20) calendar days after the Contractor has received payment from the City.

2. In addition, all retainage amounts received from the City by the Contractor must be paid by the Contractor to the Subconsultant no later than fourteen (14) calendar days after the Subconsultant has, in the opinion of the Assistant City Engineer for Construction or his/her designee, satisfactorily completed its portion of the Work.

3. A delay in or postponement of payment to the Subconsultant or material supplier requires good cause and prior written approval of the City's Assistant City Engineer for Construction or his/her designee.

4. The Contractor is required to include, in each Subcontract, a clause requiring the use of appropriate arbitration mechanisms or other method to resolve all payment disputes.

5. The City will not pay the Contractor for subsequent work performed unless and until the Contractor ensures that the Subconsultants have

been promptly paid for the work they have performed under all previous payment requests, as evidenced by the filing of City lien waivers, canceled checks (if requested), and the Contractor's sworn statement that it has complied with the prompt payment requirements.

6. The Contractor must submit a Prompt Payment Affidavit, Subconsultant list that identifies each Subconsultant (both Disadvantaged Business Enterprises (DBEs) and non-DBEs) including Subcontract values and the date and amount of the last payment to such Subconsultant(s). That documentation must be provided with every payment request submitted to the City, except for the first payment request.

7. Failure to comply with these prompt payment requirements is a breach of this Agreement. The City reserves the right to pursue any and all remedies permitted under law for breach of contract, including, but not limited to, Contractor debarment.

E. Affirmative Action Procurement and Contracting Goals:

It is the goal of the City of Columbia, SC to maximize opportunities for historically Disadvantaged Business Enterprises (DBEs) including, but not limited to, Small Business Enterprises (SBEs), Minority Business Enterprises (MBEs), and Women-Owned Business Enterprises (WBEs). The City has implemented an overall citywide 10% goal to encourage socially and economically disadvantaged business participation. This goal extends to bidders, contractors, Subconsultants and suppliers on its procurement and contracting offerings.

Additional information on the City's affirmative action goals and objectives may be obtained by contacting the following office: City of Columbia Office of Business Opportunities, 1225 Lady Street, Suite 102, Columbia, SC 29201, (803) 545-3950.

The City's success in tracking the amount of business received by SBE, MBE and WBE firms (whether as a prime Contractor or Subconsultant) is dependent upon the business community partnering with the City in this important endeavor.

The Contractor must comply with the affirmative action terms and conditions as outlined herein. The Contractor, shall in the performance of the Agreement, make constructive efforts to assist the City in complying with best practices in contracting as it relates to meeting affirmative action objectives

F. Subcontracting Goals

Under this Agreement, the subcontracting goals are as follows:

SB Goals	N/A	%
MBE	N/A	%
WBE	N/A	%
LSA	N/A	%

The Contractor will ensure Subconsultant performance during the period of performance, and optional periods as applicable. Achievement of these goals is expected during the life of the Agreement, including any extensions thereof.

7. **MENTOR-PROTÉGÉ PROGRAM** (http://www.columbiasc.net/business-outreach/) **Non-applicable** – The City of Columbia encourages, where economically feasible, establishment of mentor-protégé relationships to ensure contracting opportunities for all businesses, including minority / women / small business enterprises. The Mentor-Protégé Program (MPP) helps develop private sector business relationships and enhances the contracting capabilities of minority-owned business enterprises (MBE), women-owned business enterprises (WBE), and small business enterprises (SBE). In order to provide opportunities for growth and to encourage hands-on business relationships, certain capital improvement projects may be designated by the City of

Columbia as Mentor-Protégé Program projects. The City of Columbia has determined that participation in the City's Mentor-Protégé Program is required for this project.

The Contractor must comply with Mentor-Protégé Program Guidelines. The Contractor agrees that the Mentor Protégé Program does not create any third-party beneficiary status or contractual rights and/or duties between the City and the Protégé and that the City is not a party to the Implementation Plan. The Contractor agrees that it has or will enter into a separate contractual Agreement with the Protégé to which the City is not a party.

8. INDEMNIFICATION & INSURANCE

A. The Contractor shall procure and shall maintain during the life of this Agreement, whether such operation be by itself or by a Subconsultant or anyone directly or indirectly employed by either of them, such insurance as required by statute, ordinance, or this Agreement, to adequately protect the City from any claims or damages including bodily injury or death, which may arise during performance and operations under this Agreement.

Each insurance policy required by these instructions shall be endorsed to state that coverage shall not be suspended, voided, OR cancelled by either party, reduced in coverage or in limits, unless thirty (30) days prior written notice, by certified mail, return receipt requested, has been given to the City.

Workers Compensation Insurance: The Contractor shall procure and shall maintain during the life of this Agreement, Workers Compensation Insurance for all employees to be engaged in work on the project under this Agreement, and in case any work is subcontracted, the Contractor shall require the Subconsultant similarly to provide Worker Compensation Insurance for all of the latter employees to be engaged in such work unless such employees are covered by the protection afforded by the Contractor's Worker Compensation

Insurance. The Contractor shall not permit any person who is not protected by Workers Compensation Insurance or a properly approved Self-Insured

Workers Compensation Program to perform any activity related to this Agreement.

General Liability: The Contractor shall provide to the City evidence of General Liability insurance in an amount not less than One Million Dollars and no/100 ($1,000,000) per occurrence, and Two Million Dollars and no/100 ($2,000,000) dollars aggregate in accordance with the current Code of Ordinances, City of Columbia, South Carolina, which can be located at www.columbiasc.net.

Professional Liability: Professional Liability Insurance in an amount not less than One Million Dollars and No/100 ($1,000,000.00) per occurrence, and Two Million Dollars and No/100 ($2,000,000.00) Aggregate.

Automobile Liability Insurance: Five Hundred Thousand Dollars and No/100 ($500,000.00) combined single limit per accident for bodily injury and property damage.

B. The Contractor shall furnish the City with a certificate showing satisfactory proof of carriage of the insurance required hereunder and such insurance shall be approved by the City prior to the Contractor and any Subconsultant of the Contractor commencing any services under this Agreement and this insurance shall remain in effect throughout the term of this Agreement, and any extensions of service. Insurance shall remain in effect for the duration of the project and for a period of one (1) year after completion. The City of Columbia shall be the Certificate Holder and shall be named as an *Additional Insured.*

C. The Contractor shall indemnify, defend, hold harmless and reimburse the City, its agents, and employees from and against any and all losses, liabilities,

expenses, and all claims for damages of any nature whatsoever relating to or arising out of any action or failure to act by Contractor, its Subconsultants, officers, agents and employees of any of the obligations under the Agreement. Losses, liabilities, expenses and claims for damages shall include, but will not be limited to, civil and criminal fines and penalties, loss of use or services, bodily injury, death, personal injury, or injury to real or personal property, defense costs, legal fees and costs, and attorney's fees for an appeal.

The Contractor will also agree to promptly notify the City of any civil or criminal actions filed against the Contractor or of any notice of violation from any federal or state agency, or of any claim as soon as practical as relates to the services provided under this Agreement. The City, upon receipt of such notice, shall have the right at its election to defend any and all actions or suits or to join in defense.

9. PERMITS & LICENSES

A. The Contractor shall be responsible for obtaining any approvals, permits and/or licenses as may be required of the Contractor in performing the services required under this Agreement. The Contractor shall be responsible for any costs relating to same.

B. The Contractor shall be responsible for identifying the necessity for and providing any applications and supporting documentation to the City for any approvals and/or permits required of the City in order for the Contractor to perform the services required under this Agreement. Such approvals and/or permits may include, but not be limited to, South Carolina Department of Health and Environmental Control (SCDHEC) Construction Permits, SCDHEC Stormwater Management for Construction Sites Permits, SCDHEC Water Resources Permits, Corps of Engineers Permits, City/County/ South Carolina Department of Health and Environmental Control (SCDOT) Encroachment

Permits, encroachment permits for other utility rights-of-way and railroad right-of-way encroachment permits/agreements. The City shall obtain the approvals and/or permits identified by the Contractor and pay any costs relating to same.

C. The Contractor shall answer questions and consult with the City and/or appropriate authorities as necessary to assist the City's efforts in obtaining required permits/approvals.

D. The Contractor shall procure a City of Columbia business license while performing services under this Agreement.

10. **DUTIES UPON TERMINATION** – At termination of this Agreement, the Contractor shall immediately provide the City with all records and data in any format the Contractor is capable of producing and at no cost to the City, which were generated, created or received by the Contractor in performance of the services required by this Agreement or as the City may deem necessary to perform the required services by the City or the Contractor's successor. All records shall be free from any proprietary claims or interest. The Contractor agrees to fully cooperate with the City and any successor to ensure an effective transition to continuously provide the required services.

11. **INTEREST OF CONTRACTOR** – The Contractor covenants that Contractor presently has no interest and shall not acquire any interest, direct or indirect, which would conflict in any manner or degree with the performance of services required to be performed under this Agreement or which is adverse to the interests of the City. The Contractor further covenants that in the performance of this Agreement no person having such interest shall be employed.

The Contractor is expected to make Contractor's services available to other entities but agrees to refrain from representing other entities in matters where the position of the City conflicts with that of the other entity. The City may at its discretion, waive this provision. The Contractor has provided a list of all of its clients with whom there

may be potential conflicts with the City. This list shall be supplemented throughout the duration of this Agreement.

12. **TERMINATION OF AGREEMENT** – The City may terminate this Agreement at any time upon any of the following grounds:

A. Failure by the City to appropriate funds for the performance of any of the services required in this Agreement in any annual budget;

B. The Contractor fails to perform any of the services required in this Agreement and does not correct such deficiency within fifteen (15) days after being notified by the City of such deficiency;

C. Force Majeure;

D. The City, at its sole option and discretion, has the right to terminate this Agreement for any reason whatsoever. A termination for default under this Agreement, if wrongfully made, shall be treated as a termination for convenience under this clause;

E. Upon expiration of the term of this Agreement; and

F. By mutual agreement.

Notice of termination shall be sent by registered mail, return receipt requested. In the event of termination, the Contractor shall only be entitled to the actual direct costs of all labor and material expended on the services required under this Agreement prior to the effective date of the termination or the Contractor shall be entitled to be paid a pro-rata percentage of the total Agreement price which is equal to its percent of completion, whichever of the two methods provides the lowest sum to be paid to the Contractor. In no event shall the Contractor be entitled to anticipatory profit or damages for any termination

under this Agreement. In no event shall the Contractor be entitled to assert a claim in quantum meruit or any other measure of damages other than that stated herein.

13. **OWNERSHIP OF PROJECT** - All data, documents or other information of any description generated by or used by the Contractor or any Subconsultant retained by the Contractor and related to the services required by this Agreement shall be the property of the City and shall not be used by the Contractor for any purpose whatsoever except to perform the services required by this Agreement.

14. **OWNERSHIP OF PROJECT DOCUMENTS** - All data, documents or other information of any description generated by or used by the Contractor or any Subconsultant retained by the Contractor and related to the services required by this Agreement shall be the property of the City and shall not be used by the Contractor for any purpose whatsoever except to perform the services required by this Agreement.

15. **NOTICE** - All notices and communications in connection with this Agreement will be addressed to the following:

City of Columbia
Name: Office of Procurement and Contracts
Title: Purchasing Agent
Address: 1800 Main Street
Second Floor
Columbia, SC 29201
Phone: (803) 545-3470
Email: procurement@columbiasc.gov

American Ramp Company
Name: Heather Ogden
Title: Senior Project Manager
Address: 601 S. McKinley Ave.
Joplin, MO 64801
Phone: (417) 206-6816
Email: heather@americanrampcompany.com

16. **MISCELLANEOUS**

A. Nothing in this Agreement shall be construed to give any rights or benefits to anyone other than the City and the Contractor.

B. The Contractor shall be responsible for performance of all services required by this Agreement. The Contractor does not act as the City's agent or employee.

C. The Contractor will not assign or sublet its obligations to perform the services required by this Agreement without the written consent of the City. The Contractor shall be as fully responsible to the City for the acts and omission of its Subconsultants, as it is for the acts and omissions of persons directly employed by the Contractor.

The Contractor shall furnish and its Subconsultants shall furnish all information and reports required hereunder.

D. In the event there are any disagreements between the City and the Contractor with regard to any of the requirements, specifications or interpretation of this Agreement, the Contractor agrees to defer to the reasonable interpretations of the City as, from time to time, may be made by the City. Ambiguities in the terms of this Agreement, if any, shall not be construed against the City.

E. This Agreement shall be construed in accordance with the laws and City of Columbia Code of Ordinances and those of the State of South Carolina. The Contractor agrees to subject itself to the jurisdiction and venue of the courts of Richland or Lexington County, State of South Carolina as to all matters and disputes arising or to arise under this Agreement and the performance thereof. The City may seek attorney's fees and the Contractor agrees to pay such fees as awarded by the Court or other body. No attorney's fees may be sought by, nor will be paid to, the Contractor.

F. This Agreement represents the entire agreement between the City and the Contractor and supersedes all prior communications, negotiations, representations or agreements, either written or oral. The parties may amend this Agreement at any time provided that such Amendments are executed in

writing, signed by a duly authorized representative of both organizations, and approved, where applicable, by the City's governing body.

The City may, in its discretion, amend this Agreement to conform with federal, state, or local governmental guidelines, policies and available funding amounts, or for other reasons. If such Amendments result in a change in the funding, the scope of services, or schedule of, the activities to be undertaken as part of the Agreement, such modifications will be incorporated only by written amendment signed by both the City and the Contractor.

G. The failure of either the Contractor or the City to insist upon the strict performance of any provision of this Agreement shall not be deemed to be a waiver of the right to insist upon strict performance of such provision or of any other provision of this Agreement at any time. Partial payment by the City shall not be construed as a waiver. Waiver of any breach of this Agreement shall not constitute waiver of a subsequent breach.

H. In the event any provision of this Agreement is determined to be void or unenforceable, all other provisions shall remain in full force and effect.

I. This Agreement is subject to City Council approval.

J. The Contractor acknowledges, for itself and its Subconsultants, that it is subject to the provisions of the 1991 Ethics Reform Act (8-13-100, et seq, South Carolina Code of Laws, 1976, as amended). Under this Act, "A person may not, directly or indirectly, give, offer, or promise anything of value to a public official, public member, or public employee with intent to:

1. influence the discharge of a public official's, public member's, or public employee's official responsibilities;

2. influence a public official, public member, or public employee to commit, aid in committing, collude in, or allow fraud on a governmental entity; or,

3. induce a public official, public member, or public employee to perform or fail to perform an act in violation of the public official's, public member's, or public employee's official responsibilities.

"Anything of value" includes, but is not limited to, lodging, transportation, entertainment, food, meals, beverages, money, gifts, honorariums, discounts and interest-free loans.

K. In carrying out services under this Agreement, the Contractor shall not discriminate against any employee or applicant for employment because of race, color, religion, sex, sexual orientation or national origin. The Contractor shall take affirmative action to ensure equal employment opportunities for all applicants for employment, without regard to their race, creed, color, religion, ancestry, sex, sexual orientation, national origin, disability or other handicap, age, marital status, or status with regard to public assistance. Such action shall include, but not be limited to, the following: employment, promotion, demotion, or transfer; recruitment or recruitment advertising; layoff or termination; rates of pay or other forms of compensation; and selection for training, including apprenticeship. The Contractor shall post in conspicuous places, available to employees and applicants for employment, notices setting forth the provisions of this nondiscrimination clause. The Contractor will incorporate these nondiscrimination requirements in all subcontracts for work under this Agreement.

L. This Agreement shall be binding upon the respondent and upon its successors and assignees. This Agreement shall be binding upon the City in accordance with its terms and provisions.

M. All of the reports, information, data, records or documents of any kind, prepared or assembled by the Contractor under this Agreement are matters of public record, but that the Contractor agrees that they shall only be made available to any individual or organization by the City and the Contractor shall not make them available to any individual or organization without the prior written approval of the City.

N. Every exhibit, schedule and appendix attached to this Agreement and referred to herein is hereby incorporated into this Agreement by reference unless this Agreement expressly provides otherwise. This Agreement, exhibits and other documents include, but are not limited to the Conflict of Interest Statement, Non-collusion Affidavit, Business Information Record for Subconsultants /Subcontractors, Local Business Enterprise, and Mentor Protégé Implementation forms are incorporated by reference in this Agreement and set forth the entire understanding between the parties hereto regarding the subject matter hereof.

INTENTIONALLY BLANK

American Ramp Company
Owens Field Park Pump Track

Witness the parties' respective hands and seals on the date first written above.

CITY OF COLUMBIA, SOUTH CAROLINA

_____ _____ Date:_____
Witness Teresa Wilson, City Manager

AMERICAN RAMP COMPANY

Jonathon Hunter, VP _____ Date: 10/18/19
Print: Name/Title Signature

Recommended by:

_____ 10/23/19
Randy Davis, Director of Parks and Recreation Date

_____ 10/23/19
Henry M. Simons, Assistant City Manager Date

Sandra A. Wright _____ 10/23/19
Sandra A. Wright, CPPB, Purchasing Agent/Director of Procurement and Contracts Date

APPROVED AS TO FORM
Legal Department City of Columbia, SC

American Ramp Company
Owens Field Park Pump Track

List of Exhibits

Exhibit A – Statement of Work and Negotiated Compensation

Exhibit B – Schedule for Completion of Services

Exhibit C – Sub Engineering Consultant/Subcontractor Business Information

Exhibit D - Invoicing Procedure

Exhibit E – Prompt Payment Affidavit

Exhibit F – Prime Business Information Statement

Exhibit G – Federal Terms and Conditions

Exhibit A - Statement of Work and Negotiated Compensation

Owens Field Park Pump Track

Negotiated Cost Proposal for RFP001-19-20-NMJ

As Prepared By: American Ramp Company on September 2019

Item	Unit Cost	Units	Qty.	Cost Opinion	Notes
Design development of proposed schematic design	$ 5,000.00	LS	1	$ 5,000.00	Includes Site Specific Design Renderings and 1 Revision
Identifying and obtaining all permits required for development	$ 1,500.00	LS	1	$ -	*Assumes permit fees are waived by City of Columbia as an in-kind contribution to the project.
Cost estimates	$ 1,000.00	LS	1	$ 1,000.00	Line Item Estimate for Each Component
1 Community meeting	$ 1,500.00	LS	1	$ 1,500.00	1 Day. Includes all expenses.
Construction documents	$ 10,000.00	LS	1	$ 2,500.00	*Per City of Columbia, includes only build-ready site-specific schematic design in CAD. Design team will work with City engineer to incorporate AutoCAD into existing AutoCAD site plan.
Specifications	$ 1,500.00	LS	1	$ -	*Per City of Columbia, includes only detailed description of schematic design and material quantity calcs. for permitting as will be provided in "Design development of proposed schematic design" line item above.
Construction services	$ 18.00	SF	4,772	$ 85,898.00	*Calc. based on RFP Estimate of .35 Miles x 3FT Wide. Added funds may increase LF or be used to widen trail tread, general site improvements, or sustainable features dependent on Design Development and may alter the unit cost per LF.
As-Built plans	$ 5,000.00	LS	1	$ -	*Per City of Columbia, red line of schematic design outlining any changes made during construction will be sufficient.
		Estimated Total:		**$ 95,898.00**	Project Cost TBD depending on design development.

Exhibit B - Project Schedule

Tentative Schedule Outline (working days)
Design Development (est. 90 Days)

Review and provide feedback of City's existing schematic design (5 Days)

Site Visit and live Project Kickoff meeting with City Staff (1 Day)

Design Development and 1st Draft of proposed Schematic Design a preliminary Cost Estimates (15 Days)

Webinar to review proposed Schematic Design and preliminary Cost Estimates with City Staff (1 Day)

Revised Conceptual level design and Schematic Design and final Cost Estimates (10 Days)

Community Meeting/Engagement (1 Day)

Specifications and Construction Documents Development (15 Days)

We will work with the City staff to identify all permits required for development. Once permit applications are submitted, we expect that all permits will be completed prior to the construction season in Spring of 2020.

As-Built Plans to be provided within 15 Days after Construction is completed

Construction to be scheduled within time frame as negotiated with City after Design Development is complete. Our current estimate for Construction based on the schematic design and scope listed in the RFP is approximately 3-5 Weeks depending on weather conditions.

Note: If Design Development is completed in 2019, we anticipate that the construction should be scheduled for Spring of 2020. Estimated construction schedule to be determined based on final design plans. (Project must be completed and closed out financially by grant deadline of April 30th, 2020)

Exhibit C: Business Information Record for Subconsultants/Subcontractors

The Bidder shall list all subcontractors and vendors, who will be providing subcontracting services, furnishing materials, etc. for this project. The list shall be submitted in the format provided below. Any proposed changes from the list shall be submitted in writing to the Owner prior to initiation of any action, with the reason for proposed changes.

Project: _____

MUST BE TYPED AND REFLECT ONLY THOSE PROVIDING A SERVICE "NO LINE STRIKE THROUGH"

Business Name (as shown in SAM.gov) / Address / DUNS # & CAGE #	City of Columbia Vendor number	Contact Name & Telephone	Services and/or Materials Provided	Cost of Services and/or Material ($ Value)	Percentage of Total Contract	MBE, WBE, SBE, DBE, LBE, CDBE (indicate all that apply)	Minority Association Code (Use 2 letter Code – See Key Below)
None					%		
					%		
					%		
					%		

Key: Minority/Women Owned Business Enterprise Association Code

AF – Asian American Female
AM – Asian American Male
BF – African American Female
BM – African American Male
FB – Non-Minority Female Owned
HF – Hispanic American Female
HM – Hispanic American Male
NF – Native American Female
NM – Native American Male

TOTAL: $_____

I certify this information is true, correct, complete and active.

Business Name: _____

Representative Name / Title: _____

Date: _____

Exhibit D - Invoicing Procedures:

1. The City's Project Manager or his/her designee must review all invoices prior to payment.
2. The Contractor's invoice must contain sufficient detail by task and resource and should be easily traceable to the work completed on the project schedule. Descriptions used in the project schedule shall match those descriptions contained in the Contractor's invoice.
3. The work completed on the Contractor's project schedule must be the basis for full or a percentage of payment for work completed on the Contractor's invoice.
4. The Contractor will not request payment for taxes on Professional Services, labor or installation fees.
5. The Contractor will not invoice, or request payment for any equipment or services that may be specified in this Agreement prior to the delivery of said equipment or performance of said services.
6. The Contractor shall adhere to an agreed-upon delivery schedule for equipment and/or services. This is to ensure that the City does not pay for the advanced delivery of equipment that was not approved for delivery and/or have to warehouse or make space for unanticipated equipment deliveries. Exceptions to this requirement must be approved by the City's designated Project Manager and Purchasing Agent in writing.
7. All invoices shall include a valid Purchase Order number on the bill. If an approved emergency purchases are required for any reason before a purchase order number is available, a copy of the emergency request for purchase should accompany the Contractor's invoice.
8. The Contractor shall name a representative that will be responsible for reviewing all invoicing concerns that the City may have regarding this project.
9. The Contractor shall submit receipts for all actual expenses.
10. Travel expenses including airfare and car rental shall be invoiced at cost, without markup and with approved documentation (Note: This section does not apply to travel within the Columbia region for work being performed for the Agreement. It pertains to ***approved*** travel to and from Columbia if necessary to fulfill the terms of the Agreement.). Travel expenses apply only if applicable and approved by the City.
11. Lodging shall be invoiced up to the per diem rate according to the General Services Administration (GSA) rates established at www.gsa.gov, based on the date of travel. Lodging expenses apply only if applicable and approved by the City.
12. Field documents and other equipment/supplies shall be invoiced at cost only, with no markup, and the invoice must be submitted with approved documentation (packing slip/vendor invoice).
13. Other required non-labor expenses that may be applicable to the project and pre-approved by the City's designated Project Manager shall be invoiced at cost only, with no markup, and the invoice must be submitted with approved documentation (packing slip/vendor invoice).
14. Each invoice/payment request shall identify the percentage and dollar amount that will be paid to the Subcontractor and/or vendor for work performed and materials/products furnished. If required, the Contractor shall submit supporting documentation as required by the designated point of contact to support the amount being invoiced.

15. The Contractor shall provide the names of the Subcontractors and/or vendors and a description of the work performed in the invoice/request for payment. The Contractor shall also provide a breakdown of the supplies and materials being billed by each Subcontractor and/or vendor and the dollar amount to be reimbursed by the City.

Exhibit E – Prompt Payment Affidavit

Contractor will place a check in the appropriate box below that applies to this payment request.

Re: Payment Request No. _____

I, _____ (Name), the _____ (Title - e.g., President, Vice President, etc.) of _____ ("Company"), do state the following with regard to payments made under Contract No. _____ ("Contract"):

1. ____Contractor, at the first tier, both DBE and non-DBE, who completed work and were listed for payment on the prior Payment Request No. _____, were paid no later than twenty (20) calendar days after Company received payment from the City.

2. ____Copies of invoices and cancelled checks for Contractor at the first tier who were paid under the prior payment request have been delivered or mailed to the Construction Management Division. In addition, Company has attached to the current Payment Request all lien waivers for prior subcontractor payments and any other documentation required by the City. (Failure to attach all required documentation to the Payment Request or forward cancelled checks and invoices to the City's Construction Management Division may cause the Payment Request to be rejected by City.)

3. ____All retainage amounts withheld from any Contractor who satisfactorily completed its portion of the contract work, including punch list items, were paid to the Contractor(s) no later than fourteen (14) calendar days after it satisfactorily completed its work, whether or not City has paid said retainage amounts to Contractor. Attach a copy of the cancelled check evidencing payment of each retainage amount.

4. ____There was no delay in or postponement of any payment owed to a Contractor, whether periodic payment or retainage amount, except for good cause and after receipt of prior written approval from the City.

Attach a copy of the written approval from the City of Columbia.

_____
Company Name

_____
Signature

_____
Print Name

Date: _____

Subscribed and sworn to before me this ____ day of _____ 20___.

_____
Notary Public

EXHIBIT - F

PRIME BUSINESS INFORMATION STATEMENT

Note: Form to be completed by the PRIME Vendor, Contractor or Consultant Only and submitted with your bid, proposal or response.

Offeror/Respondent's Business Name: American Ramp Company

Headquarters Address: 601 S. McKinely Ave.
Joplin, MO 64801

Local Office Address,
if applicable:

Phone No.: 417.206.6816 Fax No.: 417.206.6888

Email address: alec@americanrampcompany.com

Tax ID No. (Soc. Sec. No., if Sole Proprietor): 35-2353308

DUNS Number: 831313361

Select One: X Corporation ___ Sole Proprietor ___ Partnership

*Have you (as a Sole Proprietor), your business or anyone on the proposed team bidding on this project, ever been debarred or suspended? Yes___ or No X

*Are you (as a Sole Proprietor), your business or anyone on the proposed team bidding currently involved in any litigation with the City? Yes___ or No X

(On a separate sheet or letter, please provide an explanation for any/all "Yes" responses).

*Note: Failure to fully disclose this information may automatically deem the Bidder/Offeror/Respondent non-responsive. All "Yes" responses are subject to further review by the City and may result in your bid/response being deemed non-responsive or bidder/Offeror deemed non-responsible.

Business Contact Person to respond authoritatively to any questions about this statement:

Name/Title: John Hunter Vice President

Phone Number: 417-206-6816

List all Subcontractors submitted for consideration/approval if PRIME is awarded the contract. Please include their business name, address and Tax Identification No(s). Use additional sheet, if necessary.

Form Completed by: _____ 10-10-19
Authorized Signature Date

EXHIBIT G - FEDERAL TERMS AND CONDITIONS (Revised 5/4/18)

1. Federal Funding

The Contractor acknowledges that Federal financial assistance will be used to fund the Contract. Contractor will comply will all applicable federal law, regulations, executive orders, federal policies, procedures, and directives.

2. No Obligation by Federal Government

The Federal Government is not a party to this contract and is not subject to any obligations or liabilities to the non-Federal entity, contractor, or any other party pertaining to any matter resulting from the contract.

3. Access to Records

The Contractor shall make available for examination by the City all of its records with respect to all matters covered by this Agreement and shall maintain such records for a period not less than three (3) years after receipt of final payment under the Agreement.

In addition, the following access to records requirements apply to the contract:

A. The Contractor agrees to provide the City, the Federal Administrator, the Comptroller General of the United States, or any of their authorized representative(s) access to any books, documents, papers, and records of the Agreement that are directly pertinent to the Contract for the purposes of making audits, examinations, excerpts, and transcriptions.

B. The Contractor agrees to permit any of the foregoing parties to reproduce by any means whatsoever or to copy excerpts and transcriptions as reasonably needed.

C. The Contractor agrees to provide the Federal Administrator or his/her authorized representative(s) access to information pertaining to the work being completed under the Contract/Agreement.

4. Amendments/Changes

The parties may amend the Agreement at any time provided that such amendments are executed in writing, signed by a duly authorized representative of both parties, and approved, where applicable, by the City's governing body.

The City may, in its discretion, amend the Agreement to conform with federal, state, or local

governmental guidelines, policies and available funding amounts, or for other reasons. If such amendments result in a change in the funding, the scope of services, or schedule of, the activities to be undertaken as part of the Agreement, such modifications will be incorporated only by written amendment signed by both parties.

5. **Ownership of Project Documents**

All data, documents or other information of any description generated by or used by the Contractor or any subcontractor retained by the Contractor and related to the services required by the Agreement shall be the property of the City and shall not be used by the Contractor for any purpose whatsoever except to perform the services required by the Agreement.

6. **Notice**

Written notice to the City shall be made by placing by registered mail, return receipt in the United States Mail, postage prepaid and addressed to: Purchasing Division, c/o City of Columbia, Post Office Box 147, Columbia, South Carolina 29217.

Written notice to the Contractor shall be made by registered mail, return receipt in the United States Mail, postage prepaid and addressed to them.

7. **Assignability/Sub-contracting**

The Contractor shall not assign or subcontract any interest in the Agreement and shall not transfer any interest in the same without the prior written consent from the City. The Contractor shall be as fully responsible to the City for the acts and omission of its sub-contractors, as it is for the acts and omissions of persons directly employed by the Contractor.

The Contractor shall furnish and cause each of its sub-contractors to furnish all information and reports required hereunder.

8. **Independent Contractor**

Nothing contained in the Agreement is intended to, or shall be construed in any manner, as creating or establishing the relationship of employer/employee between the parties. The Contractor shall at all times remain an independent Contractor with respect to the services to be performed under this agreement. The City shall be exempt from payment of all unemployment compensation, FICA, retirement, life and/or medical insurance and workers' compensation insurance.

9. **Use of Recovered Materials**

The Contractor shall comply with Section 6002 of the Solid Waste Disposal Act as amended by the Resource Conversation and Recovery Act (2 C.F.R. §200.322). In performance of the Agreement, the Contractor shall make maximum use of products containing recovered materials that are EPA designated items unless the product cannot be acquired:

A. Competitively within a timeframe providing for compliance with the Agreement performance schedule;

B. Meeting contract performance requirements; or

C. At a reasonable price.

Information about this requirement is available at EPA's Comprehensive Procurement Guidelines web site, http://www.epa.gov/cpg/. The list of EPA-designate items is available at https://www.epa.gov/cpg/products.htm.

10. Confidentiality

All of the reports, information, data, records or documents of any kind, prepared or assembled by the Contractor under the Agreement are confidential and the Contractor agrees that they shall not be made available to any individual or organization without the prior written approval of the City.

11. Interest of Contractor

The Contractor covenants for himself and on behalf of his employees that he presently has no interest and shall not acquire any interest, direct or indirect, which would conflict in any manner or degree with the performance of services required to be performed under the Agreement or which is adverse to the interests of the City of Columbia. The Contractor further covenants that in the performance of the Agreement no person having such interest shall be employed.

The Contractor is expected to make its services available to other entities but agrees to refrain from representing other entities in matters where the position of the City conflicts with that of the other entity. The City may at its discretion, waive this provision. The Contractor has provided a list of all of its clients with whom there may be potential conflicts with the City. This list shall be supplemented throughout the duration of the Agreement.

12. Compliance with the Contract/Agreement Work Hours and Safety Standards Act

Contractor will comply with the following provisions:

A. Overtime requirements. No contractor or sub-contractor contracting for any part of the contract work which may require or involve the employment of laborers or mechanics shall require or permit any such laborer or mechanic in any workweek in which he or she is employed on such work to work in excess of forty hours in such workweek unless such laborer or mechanic receives compensation at a rate not less than one and one-half times the basic rate of pay for all hours worked in excess of forty hours in such workweek.

B. Violation; liability for unpaid wages; liquidated damages. In the event of any violation of the clause set forth in paragraph (A) of this section the contractor and any sub-contractor responsible therefor shall be liable for the unpaid wages. In addition, such contractor and sub-contractor shall be liable to the United States (in the case of work done under contract for the District of Columbia or a territory, to such District or to such territory), for liquidated damages. Such liquidated damages shall be computed with respect to each individual laborer or mechanic, including watchmen and guards, employed in violation of the clause set forth in paragraph (A) of this section, in the sum of $10 for each calendar day on which such individual was required or permitted to work in excess of the standard workweek of forty hours without payment of the overtime wages required by the clause set forth in paragraph (A) of this section.

C. Withholding for unpaid wages and liquidated damages. The City shall upon its own action or upon written request of an authorized representative of the Department of Labor withhold or cause to be withheld, from any moneys payable on account of work performed by the contractor or sub-contractor under any such contract or any other Federal contract with the same prime contractor, or any other federally-assisted contract subject to the Contract Work Hours and Safety Standards Act, which is held by the same prime contractor, such sums as may be determined to be necessary to satisfy any liabilities of such contractor or sub-contractor for unpaid wages and liquidated damages as provided in the clause set forth in paragraph (B) of this section.

D. Subcontracts. The contractor or sub-contractor shall insert in any subcontracts the clauses set forth in paragraph (A) through (D) of this section and also a clause requiring the subcontractors to include these clauses in any lower tier subcontracts. The prime contractor shall be responsible for compliance by any subcontractor or lower tier sub-contractor with the clauses set forth in paragraphs (A) through (D) of this section.

13. <u>Administrative Remedies</u>

The Contractor shall only be entitled to the actual direct costs of all labor and material expended on the services required under the Agreement prior to the effective date of the termination. In no event, shall the Contractor be entitled to anticipatory profit or damages for any termination under the Contract. In no event shall the Contractor be entitled to assert a claim in quantum merit or any other measure of damages other than that stated herein.

The Contract shall be construed in accordance with federal, state, local laws, ordinances and codes in performing the work provided under the Agreement. The Contractor agrees to subject itself to the jurisdiction and venue of the Circuit Courts of Richland County, State of South Carolina as to all matters and disputes arising or to arise under the Contract and the performance thereof tractor acknowledges that 31 U.S.C. Chap. 38 (Administrative Remedies for False Claims and Statements) applies to the Contractor's actions pertaining to this contract.

14. Miscellaneous

Nothing in the Agreement shall be construed to give any rights or benefits to anyone other than the City and the Contractor.

The Contractor shall not assign or subcontract any interest in the Agreement and shall not transfer any interest in the same without the prior written consent of the City. The Contractor shall be as fully responsible to the City for the acts and omission of its sub-contractors, as it is for the acts and omissions of persons directly employed by the Contractor.

The Contractor shall furnish and cause each of its sub-contractors to furnish all information and reports required hereunder.

In the event there are any disagreements between the City and the Contractor with regard to any of the requirements, specifications or interpretation of the Agreement, the Contractor agrees to defer to the reasonable interpretations of the City as, from time to time may be made by the City. Ambiguities in the terms of the Agreement, if any, shall not be construed against the City.

The Agreement shall be construed in accordance with federal, state, local laws, ordinances and codes in performing the work provided under the Agreement. The Contractor agrees to subject itself to the jurisdiction and venue of the Circuit Courts of Richland County, State of South Carolina as to all matters and disputes arising or to arise under the Agreement and the performance thereof. The City may seek attorney's fees and the Contractor agrees to pay such fees as awarded by the Court or other body. No attorney's fees may be sought by, nor will be paid to, the Contractor.

The Contractor acknowledges that 31 U.S.C. Chap. 38 (Administrative Remedies for False Claims and Statements) applies to the Contractor's actions pertaining to this contract.

The failure of either the Contractor or the City to insist upon the strict performance of any provision of this Agreement shall not be deemed to be a waiver of the right to insist upon strict performance of such provision or of any other provision of this Agreement at any time.

Partial payment by the City shall not be construed as a waiver. Waiver of any breach of this Agreement shall not constitute waiver of a subsequent breach.

In the event any provision of this Agreement is determined to be void or unenforceable, all other provisions shall remain in full force and effect.

15. Program Fraud and False or Fraudulent Statements or Related Acts

The contractor acknowledges that 31 U.S.C. Chapter 38 (Administrative Remedies for False Claims and Statements) applies to the contractor's actions pertaining to this contract.

16. False Claims Act

Under Liability for Certain Acts

a. In general any person who

i. knowingly presents, or causes to be presented, a false or fraudulent claim for payment or approval;

ii. knowingly makes, uses, or causes to be made or used, a false record or statement material to a false or fraudulent claim;

iii. conspires to commit a violation of subparagraph (i), (ii), (iv), (v), (vi), or (vii);

iv. has possession, custody, or control of property or money used, or to be used, by the Government and knowingly delivers, or causes to be delivered, less than all of that money or property;

v. is authorized to make or deliver a document certifying receipt of property used, or to be used, by the Government and, intending to defraud the Government, makes or delivers the receipt without completely knowing that the information on the receipt is true;

vi. knowingly buys, or receives as a pledge of an obligation or debt, public property from an officer or employee of the Government, or a member of the Armed Forces, who lawfully may not sell or pledge property; or

vii. knowingly makes, uses, or causes to be made or used, a false record or statement material to an obligation to pay or transmit money or property to the Government, or knowingly conceals or knowingly and improperly avoids or decreases an obligation to pay or transmit money or property to

the Government, is liable to the United States Government for a civil penalty of not less than $5,000 and not more than $10,000, as adjusted by the Federal Civil Penalties Inflation Adjustment Act of 1990 (28 U.S.C. 2461 note; Public Law 104–410 [1]), plus 3 times the amount of damages which the Government sustains because of the act of that person.

17. Changes within the General Scope of the Contract

The City may at any time, by written order, and without notice to the sureties, if any, make changes **within the general scope of this contract** in the services to be performed.

If any such change causes an increase or decrease in the cost of, or the time required for, performance of any part of the work under this contract, whether or not changed by the order, the City shall make an equitable adjustment to the contract price, the delivery schedule, or both, any other affected area and shall amend the contract.

The Contractor must assert its right to an adjustment under this clause within 30 days from the date of receipt of the written order. However, if the City decides that the facts justify it, the City's authorized representative may receive and act upon a proposal submitted before final payment of the contract.

If the Contractor's proposal includes the cost of property made obsolete or excess by the change, the City's representative shall have the right to prescribe the manner of the disposition of the property.

Failure to agree to any adjustment shall be subject to the provisions of section XIV, Miscellaneous. However, nothing in this clause shall excuse the Contractor from proceeding with the contract as changed.

No services for which an additional cost or fee will be charged by the Contractor shall be furnished without the prior written authorization of the Contracting Officer.

18. Claims and Disputes 2 CFR 200 318 (k)

This contract is subject to Contract Disputes.

A. All disputes arising under or relating to this contract shall be resolved under this clause.

B. "Claim," as used in this clause, means a written demand or written assertion by one of the contracting parties seeking, as a matter of right, the payment of money in a

sum certain, the adjustment or interpretation of contract terms, or other relief arising under or relating to this contract. A voucher, invoice, or other routine request for payment that is not in dispute when submitted is not a claim under this provision.

All claims must comply with the submission and certification requirements of this provision, if it is disputed either as to liability or amount must be acted upon in a reasonable time.

A claim by the Contractor shall be made in writing and, unless otherwise stated in this contract, submitted within 6 (Six) months after accrual of the claim to the Contracting Officer for a written decision.

A claim by the City against the Contractor shall be subject to a written decision by the Contracting Officer.

The Contractor shall provide the certification specified below when submitting any claim.

A. The certification requirement does not apply to issues in controversy that have not been submitted as all or part of a claim.

B. The certification shall state as follows: "I certify that the claim is made in good faith; that the supporting data are accurate and complete to the best of my knowledge and belief; that the amount requested accurately reflects the contract adjustment for which the Contractor believes the City is liable; and that I am authorized to certify the claim on behalf of the Contractor."

C. The certification may be executed by any person authorized to bind the Contractor with respect to the claim.

For Contractor claims, the Contracting Officer must, if requested in writing by the Contractor, render a decision within 60 days of the request.

The Contracting Officer's decision shall be final unless the Contractor appeals.

If the claim by the Contractor is submitted to the Contracting Officer or a claim by the City is presented to the Contractor, the parties, by mutual consent, may agree to use alternative dispute resolution (ADR). If the Contractor refuses an offer for ADR, the Contractor shall

inform the Contracting Officer, in writing, of the Contractor's specific reasons for rejecting the offer.

The City shall pay interest on the amount found due and unpaid from (1) the date that the Contracting Officer receives the claim (certified, if required); or (2) the date that payment otherwise would be due, if that date is later, until the date of payment.

With regard to claims having defective certifications, interest shall be paid from the date a proper certification is provided. Simple interest on claims shall be paid at the rate. Which is applicable to the period during which the Contracting Officer receives the claim and then at the rate applicable for each 6-month period as fixed by the State during the pendency of the claim.

The Contractor shall proceed diligently with performance of this contract, pending final resolution of any request for relief, claim, appeal, or action arising under the contract, and comply with any decision of the Contracting Officer.

19. Disputes

This contract is subject to 41 U.S.C. chapters 71, Contract Disputes. Failure of the parties to this contract to reach agreement on any request for equitable adjustment, claim, appeal or action arising under or relating to this contract shall be a dispute to be resolved in accordance with the Claims and Disputes Clause. The Contractor shall proceed diligently with performance of this contract, pending final resolution of any dispute arising under the contract.

20. Equal Employment Opportunity (EEOC)

During the performance of this contract, the Contractor agrees as follows:

The Contractor will not discriminate against any employee or applicant for employment because of race, color, religion, sex, sexual orientation, or national origin. The Contractor will take affirmative action to ensure that applicants are employed, and that employees are treated during employment without regard to their race, color, religion, sex, sexual orientation, or national origin.

Such action shall include, but not be limited to Employment, upgrading, demotion, or transfer; recruitment or recruitment advertising; layoff or termination; rates of pay or other forms of compensation; and selection for training, including apprenticeship. The Contractor agrees to post in conspicuous places, available to employees and applicants

for employment, notices to be provided setting forth the provisions of this nondiscrimination clause.

A. The Contractor will, in all solicitations or advertisements for employees placed by or on behalf of the Contractor; state that all qualified applicants will receive considerations for employment without regard to race, color, religion, sex, sexual orientation, or national origin.

B. The Contractor will send to each labor union or representative of workers with which he has a collective bargaining agreement or other contract or understanding, a notice to be provided advising the said labor union or workers' representatives of the Contractor's commitments under this section, and shall post copies of the notice in conspicuous places available to employees and applicants for employment.

C. The Contractor will comply with all provisions of Executive Order 11246 of September 24, 1965, and of the rules, regulations, and relevant orders of the Secretary of Labor.

D. The Contractor will furnish all information and reports required by Executive Order 11246 of September 24, 1965, and by rules, regulations, and orders of the Secretary of Labor, or pursuant thereto, and will permit access to his books, records, and accounts by the administering agency and the Secretary of Labor for purposes of investigation to ascertain compliance with such rules, regulations, and orders.

E. In the event of the Contractor's noncompliance with the non-discrimination clauses of this Agreement or with any of the said rules, regulations, or orders, this contract may be canceled, terminated, or suspended in whole or in part and the Contractor may be declared ineligible for further Government contracts or federally assisted construction contracts in accordance with procedures authorized in Executive Order 11246 of September 24, 1965, and such other sanctions as may be imposed and remedies invoked as provided in Executive Order 11246 of September 24, 1965, or by rule, regulation, or order of the Secretary of Labor, or as otherwise provided by law.

F. The Contractor will include the portion of the sentence immediately preceding paragraph (A) and the provisions of paragraphs (A) through (G) in every subcontract or purchase order unless exempted by rules, regulations, or orders of

the Secretary of Labor issued pursuant to section 204 of Executive Order 11246 of September 24, 1965, so that such provisions will be binding upon each sub-contractor or vendor.

G. The Contractor will take such action with respect to any subcontract or purchase order as the administering agency may direct as a means of enforcing such provisions, including sanctions for noncompliance: Provided, however, that in the event the Contractor becomes involved in, or is threatened with, litigation with a sub-contractor or vendor as a result of such direction by the administering agency the Contractor may request the United States to enter into such litigation to protect the interests of the United States.

21. Severability

If any provision of the Agreement is held invalid, the remainder of the Agreement shall not be affected thereby if such remainder would then continue to conform to the terms and requirements of applicable law.

22. Clean Air Act and the Federal Water Pollution Control Act

The Contractor must comply with all applicable standards, orders, or regulations issued pursuant to the Clean Air Act (42 U.S.C. §7401-7671(q) and the Federal Water Pollution Control Act as amended (33 U.S.C. §1251-1387).

The Contractor will report each violation to the City, Federal Agenc, and the appropriate Environmental Protection Agency Regional Office (EPA).

The Contractor agrees to include these requirements in each sub-contract exceeding Twenty Five Thousand Dollars ($25,000.00) financed in whole or in part with federal assistance.

23. Contract Work hours and Safety Standards Act (40 USC 3701 – 3708)

When applicable all contracts awarded by the City in excess of $100,000 that involve the employment of mechanics or laborers must include a provision for compliance with 40 USC 3702 and 3704, as supplemented by the Department of Labor Regulations (29 CFR Part 5) Under 40 USC 3702 of the Act, each contractor must compute the wages of every mechanic and laborer on the basis of a standard work week of 40 hours. Work in excess of the standard work week is permissible provided that the worker is compensated at a rate of not less than one and a half times the basic rate of pay for all hours worked in

excess of 40.

24. Indemnification, Hold Harmless and Insurance

The Contractor shall provide to the City evidence of Commercial General Liability Insurance in an amount not less than One Million Dollars and No/100 ($1,000,000.00) per occurrence and Two Million Dollars and No/100 ($2,000,000.00) aggregate in accordance with the current Columbia Code of Ordinances, which can be located at www.columbiasc.net, and Excess General Liability Insurance in an amount not less than Two Million Dollars and No/100 ($2,000,000.00).

The City has determined that bonding is required for construction projects per 2 C.F.R. §200.325 and 2 C.F.R. §200.325 (a)-(c). Bonding requirements will include: A Bid Bond Guarantee equivalent to 5% of the bid and a Performance and Payment Bond at 100% of the bid.

The Contractor shall furnish the City with a certificate showing satisfactory proof of carriage of the insurance required hereunder and such insurance shall be approved by the City prior to the Contractor and any sub-contractor of the Contractor commencing any services under the Agreement and this insurance shall remain in effect throughout the term of the Agreement and any renewals. Insurance shall remain in effect for the duration of the project and for a period of one (1) year after completion. The City of Columbia shall be the Certificate Holder and shall be named as an Additional Insured.

The Contractor shall hold harmless, defend and indemnify the City from any and all claims, actions, suits, charges and judgments whatsoever that arise out of the Contractor's performance or nonperformance of the services or subject matter called for in the Agreement.

25. Licenses, Permits and Taxes

The Contractor shall be responsible for obtaining any approvals, permits and/or licenses as may be required of the Contractor in performing the services required under the Agreement. The Contractor shall be responsible for any costs relating to same.

The Contractor shall be responsible for identifying and providing any applications and supporting documentation to the City for any approvals and/or permits required of the City in order for the Contractor to perform the services required under the Agreement. Such approvals and/or permits may include, but not necessarily be limited to, SCDHEC Construction Permits, SCDHEC Storm Water Management for Construction Sites

Permits, SCDHEC Water Resources Permits, Corps of Contractors Permits, City/County/SCDOT Encroachment Permits, Encroachment Permits for other utility rights-of-way and Railroad Right-of-Way Encroachment Permits/Agreements. The City shall obtain the approvals and/or permits identified by the Contractor and pay any costs relating to same.

The Contractor shall answer questions and consult with the City and/or appropriate authorities as necessary to assist the City's efforts in obtaining required permits/approvals.

The Contractor shall procure a City of Columbia business license while performing services under the Agreement.

26. Duties upon Completion

At completion of this Agreement, the Contractor shall immediately provide the City with all records and data in any format the Contractor is capable of producing and at no cost to the City, which were generated, created or received by the Contractor in performance of the services required by the Agreement or as the City may deem necessary to perform the required services by the City or the Contractor's successor. All records shall be free from any proprietary claims or interest. The Contractor agrees to fully cooperate with the City and any successor to ensure an effective transition to continuously provide the required services.

27. Termination

The City may terminate the Agreement at any time upon any of the following grounds:

A. Non-Appropriation

Failure by the City to appropriate funds for the performance of any of the services required in this Agreement in any annual budget;

B. Termination for Cause/Default

If, through any cause, the Contractor shall fail to fulfill in a timely and proper manner these obligations under the Contract, or if the Contractor shall violate any of the covenants, agreements, or stipulations of the Contract, the City shall have the right to terminate the Contract by giving written notice to the Contractor of such termination and specifying the effective date thereof, at least five (5) days

before the effective date of such termination. In such event, all finished or unfinished documents, data studies, surveys and reports prepared under the Contract shall become the property of the City.

Notwithstanding the above, the Contractor shall not be relieved of liability to the City for damages sustained by the City by virtue of any breach of the Contract by the Contractor and the City may withhold any payments to the Contractor until such time as the exact amount of damages due to the City from the Contractor is determined.

The Contractor fails to perform any of the services required in this Contract and does not correct such deficiency within fifteen (15) days having been notified by the City of such deficiency.

In case of default, the City reserves the right to purchase any or all items and/or services on the open market, charging contractor with any excessive costs. Should such charges be assessed, no subsequent bids and/or proposals submitted by the defaulting contractor shall be considered until the assessed charges have been satisfied.

C. Termination for the Convenience of the City

The City may terminate this Contract at any time by giving written notice to the Contractor of such termination and specifying the effective date thereof, at least seven (7) days before the effective date of such termination. In that event, all finished or unfinished documents and other material as described in Access to Records shall, at the option of the City, become its property.

The City shall, at its sole option and discretion, have the right to terminate this contract for any reason whatsoever. A termination for default under the Agreement, if wrongfully made, shall be treated as a termination for convenience under this clause;

D. Force Majeure (Act of God);

E. Upon expiration of the term of this Agreement; and

F. By mutual agreement.

28. Suspension and Debarment

The Contractor is subject to non-procurement Debarment and Suspension Regulations implementing Executive Orders 12549 and 12689, 2 C.F.R. pt. 180 (2 C.F.R. §200.212). The Agreement is a covered transaction for the purposes of C.F.R. pt. 180 and 2 C.F.R. pt. 3000. As such the Contractor is required to verify that none of the Contractor(s), its principals (defined at 2 C.F.R. §180.995), or its affiliates (defined at 2 C.F.R. §180.905) are excluded (defined at 2 C.F.R. §180.940) or disqualified (defined at 2 C.F.R. §180.935).

Execution of the Contract is a material representation of fact relied upon by the City. If it is later determined that the Contractor did not comply with 2 C.F.R. pt. 180, sub-part C and 2 C.F.R. pt. 3000, sub-part C in addition to remedies available to the State of South Carolina Emergency Management Division and the City of Columbia, the Federal Government may pursue available remedies, including but not limited to suspension and/or debarment.

The Contractor shall comply with the requirements of 2 C.F.R. pt. 180, sub-part C and 2 C.F.R. pt. 3000; sub-part C during the duration of the project and throughout the period that may arise from this project. The Contractor further agrees to include a provision requiring such requirements in its lower-tier covered transactions throughout the duration of this contract.

The Contractor shall notify the City, if your firm or sub-contractor(s) becomes suspended or debarred during the course of this project.

This Contract may be terminated in accordance with the Termination for Cause provisions contained elsewhere in the contract.

29. Use of Recovered Materials

The Contractor shall comply with Section 6002 of the Solid Waste Disposal Act as amended by the Resource Conversation and Recovery Act (2 C.F.R. §200.322). In performance of the Agreement, the Contractor shall make maximum use of products containing recovered materials that are EPA designated items unless the product cannot be acquired:

30. Invoicing and Payments

The Contractor will comply with all applicable federal, state, and local laws, regulations, executive orders, policies, procedures, and directives related to the billing of services, supplies, equipment, rentals, material, travel and other direct costs (ODCs)as identified in this contract.

The Contractor shall submit invoices no more frequently than monthly for services rendered during each phase of the contract. Each invoice submitted must describe the services and/or supplies and equipment for which payment is requested as shown in the contract schedule.

If the contract is firm fixed price and progress payments are permitted, the amount being billed, services rendered, percentage of completed work and remaining work shall be included on the invoice.

Each invoice shall bear the signature of the Contractor, which signature shall certify that the information contained in the invoice is true and accurate and that the invoice amount is due and amount owed.

The City's Project Manager or his/her designee must review and recommend approval of all invoices prior to payment.

The Contractor shall name a representative that will be responsible for reviewing all invoicing.

All invoices **shall** include a valid Purchase Order number on the bill. Each Purchase Order must be billed separately. In the event of an emergency when emergency purchases are required for any reason before a purchase order number is available, a copy of the emergency request for purchase should accompany the contractor's invoice.

Failure of the Contractor to follow these invoice requirements will result in the delay of payment of the invoices. The submission of an invoice failing to provide the required information may provide the City with the basis with which to reject the invoice as improper.

This total price of the contract is _____. The total amount authorized for payment under the contract shall not exceed this amount unless authorized in writing by the contract and in accordance with the Changes clause specified elsewhere in the contract.

31. <u>Progress Payments under Fixed-Price Construction Contracts</u>

Payment of price. The City shall pay the Contractor the contract price as provided in this contract.

Progress payments. The City may make progress payments monthly as the work proceeds, or at more frequent intervals as determined by the Contracting Officer, on estimates of work accomplished which meets the standards of quality established under the contract.

A. The Contractor's request for progress payments shall include the following substantiation:

   i. An itemization of the amounts requested, related to the various elements of work required by the contract covered by the payment requested.

   ii. A listing of the amount included for work performed by each subcontractor under the contract.

   iii. A listing of the total amount of each subcontract under the contract.

   iv. A listing of the amounts previously paid to each such subcontractor under the contract.

   v. Additional supporting data in a form and detail required by the Contracting Officer.

B. In the preparation of estimates, the Contracting Officer may authorize material delivered on the site and preparatory work done to be taken into consideration. Material delivered to the Contractor at locations other than the site also may be taken into consideration if:

   i. Consideration is specifically authorized by this contract; and

   ii. The Contractor furnishes satisfactory evidence that it has acquired title to such material and that the material will be used to perform this contract.

   iii. Contractor certification. Along with each request for progress payments, the Contractor shall furnish the following certification, or payment shall not be made: (However, if the Contractor elects to delete paragraph (C) (4) from the certification, the certification is still acceptable)

   I hereby certify, to the best of my knowledge and belief, that:

   i. The amounts requested are only for performance in accordance with the specifications, terms and conditions for the contract;

   ii. All payments due to subcontractors and suppliers from previous payments received under the contract have been made, and timely payments will be made from the proceeds of the payment covered by this certification, in

accordance with subcontract agreements and the requirements of Chapter 39 of Title 31, United States Code;

iii. This request for progress payments does not include any amounts which the prime contractor intends to withhold or retain from a subcontractor or supplier in accordance with the terms and conditions of the subcontract; and

iv. This certification is not to be construed as final acceptance of a subcontractor's performance.

32. Excusable Delays

The Contractor shall be liable for default unless nonperformance is caused by an occurrence beyond the reasonable control of the Contractor and without its fault or negligence such as, acts of God or the public enemy, acts of the Government in either its sovereign or contractual capacity, fires, floods, epidemics, quarantine restrictions, strikes, unusually severe weather, and delays of common carriers. The Contractor shall notify the Contracting Officer in writing as soon as it is reasonably possible after the commencement of any excusable delay, setting forth the full particulars in connection therewith, shall remedy such occurrence with all reasonable dispatch, and shall promptly give written notice to the Contracting Officer of the cessation of such occurrence.

33. Stop-work Order

The City may, at any time, by written order to the Contractor, require the Contractor to stop all, or any part, of the work called for by this contract for a period of ____days after the order is delivered to the Contractor, and for any further period to which the parties may agree. The order shall be specifically identified as a stop-work order issued under this clause. Upon receipt of the order, the Contractor shall immediately comply with its terms and take all reasonable steps to minimize the incurrence of costs allocable to the work covered by the order during the period of work stoppage.

Within a period of 90 days after a stop-work is delivered to the Contractor, or within any extension of that period to which the parties agree the Contracting Officer shall either:

A. Cancel the stop-work order; or

B. Terminate the work covered by the order as provided in the Default, or the Termination for Convenience of the Government, clause of this contract.

If a stop-work order issued under this clause is canceled or the period of the order or any extension thereof expires, the Contractor shall resume work. The City shall make an

equitable adjustment in the delivery schedule or contract price, or both, and the contract shall be modified, in writing, accordingly, if:

A. The stop-work order results in an increase in the time required for, or in the Contractor's cost properly allocable to, the performance of any part of this contract; and

B. The Contractor asserts its right to the adjustment within 30 days after the end of the period of work stoppage; provided that, if the City decides the facts justify the action, the Contracting Officer may receive and act upon the claim submitted at any time before final payment under this contract.

If a stop-work order is not canceled and the work covered by the order is terminated for the convenience of the Government, the City shall allow reasonable costs resulting from the stop-work order in arriving at the termination settlement.

If a stop-work order is not canceled and the work covered by the order is terminated for default, the City shall allow, by equitable adjustment or otherwise, reasonable costs resulting from the stop-work order.

34. Suspension of Work

The City may order the Contractor, in writing, to suspend, delay, or interrupt all or any part of the work of this contract for the period of time that the City determines appropriate for the convenience of the City.

If the performance of all or any part of the work is, for an unreasonable period of time, suspended, delayed, or interrupted:

A. By an act of the City in the administration of this contract, or

B. By the City's failure to act within a reasonable time, an adjustment may be made for any increase in the cost of performance (excluding profit) necessarily caused by any unreasonable suspension, delay, or interruption. The contract will be modified in writing accordingly to adjust the time and/or date for performance or completion of the contract.

However, no adjustment shall be made under this clause for any suspension, delay, or interruption to the extent that performance would have been so suspended, delayed, or interrupted by any other causes, including the fault or negligence of the Contractor, or for which an equitable adjustment is provided for or excluded under any other term or condition of this contract.

A claim under this clause shall not be allowed:

A. For any costs incurred more than 30 days before the Contractor shall have notified the Contracting Officer in writing of the act or failure to act involved (but this requirement shall not apply as to a claim resulting from a suspension order); and

B. Unless the claim, in an amount stated, is asserted in writing as soon as practicable after the termination of the suspension, delay, or interruption, but not later than the date of final payment under the contract.

35. Affirmative Action Procurement and Subcontracting Goals

It is the goal of the City of Columbia, SC to maximize opportunities for historically Disadvantaged Business Entities (DBEs) including, but not limited to, Small Businesses (SBEs), Minority Businesses (MBEs), and Women-Owned Businesses (WBEs).

The City has implemented an overall citywide 20% goal for **construction** to encourage socially and economically disadvantaged business participation. This goal extends to bidders, subcontractors and suppliers on its procurement and contracting offerings.

Additional information on the City's affirmative action goals and objectives may be obtained by contacting the following office: City of Columbia Office of Business Opportunities, 1225 Lady Street, Suite 102, Columbia, South Carolina 29201, (803) 545-3950, www.columbiasc.net/OBO.

The City's success in tracking the amount of business received by SBE, MBE and WBE FIRMS (whether as a prime contractor or sub-contractor) is dependent upon the business community partnering with us in this important endeavor.

The Contractor must comply with the terms and conditions as outlined herein. The Contractor shall, in the performance of the contract/agreement, make constructive efforts to assist the City in complying with best practices in contracting as it relates to meeting affirmative action objectives.

The Contractor must adhere to federal regulations 2CFR 200.321 and take the following affirmative steps to ensure that Small (SBE) and Minority Businesses (MBE), Women-Owned Businesses Entities (WOBE) and Labor Surplus Area (LSA) firms are utilized to the fullest extent possible:

A. **CFR 200.321 - Procurement and Affirmative Action** - Small and Minority Businesses, Women-Owned Businesses, and Labor Surplus Area Firms

The Contractor shall/must take the following affirmative steps to ensure these firms are used when possible:

i. Place qualified small, minority, and woman-owned business on solicitation lists;

ii. Assure that such businesses are solicited when they are potential sources;

iii. Divide total requirement, when economically feasible, into smaller tasks or quantities to permit maximum participation by such businesses;

iv. Establish delivery schedules, where requirements permit, which encourage such business to respond;

v. Use service and assistance from such organization as SBA, Minority Business Development Agency of the Department of Commerce; and

vi. Require prime contractors to take the same affirmative steps.

36. Subcontracting Goals

As a result of the award of this contract, the subcontracting goals for the social-economic groups designated are as follows:

SB Goals	_____%
MBE	_____%
WBE	_____%
LSA	_____%

The Contractor will also be expected to ensure subcontractor performance during the period of performance and include optional periods as applicable. Achievement of these goals is expected during the life of the contract/agreement to include any changes incorporated by modification to the contract/agreement.

37. Oversight 2 CFR 200.318 (b)

The City will maintain oversight to ensure the Contractor performs in accordance with terms, conditions and specifications per (2 C.F.R. §200.318(b) (General Procurement Standards) and 44 C.F.R. §13.36 (Procurement).

38. System for Award Management (SAM)

Unless exempted by an addendum to this contract, the Contractor is responsible during performance and through final payment of any contract for the accuracy and completeness of the data within the SAM database, and for any liability resulting from the Government's reliance on inaccurate or incomplete data. To remain registered in the SAM database after the initial registration, the Contractor is required to review and update on an annual basis

from the date of initial registration or subsequent updates its information in the SAM database to ensure it is current, accurate and complete.
Updating information in the SAM does not alter the terms and conditions of this contract and is not a substitute for a properly executed contractual document.

If a Contractor has legally changed its business name, "doing business as" name, or division name (whichever is shown on the contract), or has transferred the assets used in performing the contract, but has not completed the necessary requirements regarding novation and change-of-name agreements, the Contractor shall provide the responsible Contracting Officer a minimum of one business day's written notification of its intention to:

Incorporation by reference. The Contractor's representations and certifications, including those completed electronically via the System for Award Management (SAM), are incorporated by reference into the contract.

39. **Americans With Disabilities Act**
Engineer agrees to comply fully with any and all provisions of the Americans with Disabilities Act (hereinafter referred to as "ADA") as applicable to the Contractor and the activities to be performed by Contractor under the scope of this Contract. If employing more than fifteen (15) employees, Contractor agrees to comply fully with Title I of the "ADA" as set forth at 28 CFR Part 130. If providing "public accommodations" as defined by the Act in Section 301(7)(A)-(L), Contractor agrees to comply fully with Title III of the "ADA" as set forth at 28 CFR Part 36. If providing public transportation, Contractor agrees to comply fully with the federal regulations as set forth at 49 CFR Parts 37 and 38.

40. Byrd Anti-Lobbying Amendment 31 U.S.C. § 1352 (as amended)

Contractors who apply or bid for an award of $100,000 or more shall file the required certification. Each tier certifies to the tier above that it will not and has not used Federal appropriated funds to pay any person or organization for influencing or attempting to influence an officer or employee of any agency, a member of Congress, officer or employee of Congress, or an employee of a member of Congress in connection with obtaining any Federal contract, grant, or any other award covered by 31 U.S.C. § 1352. Each tier shall also disclose any lobbying with non-Federal funds that takes place in connection with obtaining any Federal award. Such disclosures are forwarded from tier to tier up to the recipient.

41. DHS Seal, Logo, and Flags

The contractor shall not use the DHS seal(s), logos, crests, or reproductions of flags or likenesses of DHS agency officials without specific federal pre-approval.

Contract Amendment #4
Columbia Canal Embankment Repair Services
DR4241
Kleinschmidt Associates

October 31, 2019

Description of Change: Request change in Agreement for Engineering Services between the City of Columbia (City) and Kleinschmidt Associates (Engineer) dated September 6, 2016 (Agreement) to amend Page 18, paragraph DD, *Term of Agreement*, sentence one (1), to read, "The Agreement shall be for a period of five (5) years unless earlier terminated by either party as provided herein."

All other provisions of the Agreement, except as herein modified or changed, remain in full force and effect.

Proposed Change and Basis for Payment:

Original Contract Price:	**$957,112.00**
Amendment #1 (no cost change)	$0.00
Amendment #2 (no cost change)	$0.00
Amendment #3 (no cost change)	$0.00
Current Contract Total:	**$0.00**
This Change Amendment 4: (no cost change)	$0.00
Revised Contract Price:	**$957,112.00**

This Change is Acceptable:

CONTRACTORS'S NAME: Kleinschmidt Associates

_____ _____ Date: _____
Signature (Please Print Name)

City of Columbia:

By: _____ _____
Joseph D. Jaco, P.E. Director of Utility Operations Date

By: _____ _____
Clint E. Shealy, P.E., Assistant City Manager for Columbia Water Date

By: _____ _____
Sandra A. Wright, CPPB, Director of Procurement and Contracts/Purchasing Agent Date

Approve of Change: _____ _____
Teresa Wilson, City Manager Date

APPROVED AS TO FOR
Legal Department City of C

Contract Amendment #3
Columbia Canal Embankment Repair Services
DR4241
Michael Baker International

October 31, 2019

Description of Change: Request change in Agreement for Engineering Services between the City of Columbia (City) and Michael Baker International (Engineer) dated August 22, 2016 (Agreement) to amend Page 18, Paragraph CC, *Term of Agreement*, sentence one (1), to read, "The Agreement shall be for a period of five (5) years, unless earlier terminated by either party as provided herein."

All other provisions of the Agreement, except as herein modified or changed, remain in full force and effect.

Proposed Change and Basis for Payment:

Original Contract Price:	**$4,938,139.00**
Amendment #1 (no cost change)	$0.00
Amendment #2 (no cost change)	$0.00
Current Contract Total:	**$0.00**
This Change Amendment 3: (no cost change)	$0.00
Revised Contract Price:	**$4,938,139.00**

This Change is Acceptable:

CONTRACTORS'S NAME: **Michael Baker International, Inc.**

John V. Walsh — Signature

John V. Walsh, P.E., Vice-President — (Please Print Name)

Date: **November 6, 2019**

City of Columbia:

By: _____ Joseph D. Jaco, P.E. Director of Utility Operations — Date _____

By: _____ Clint E. Shealy, P.E., Assistant City Manager for Columbia Water — Date _____

By: _____ Sandra A. Wright, CPPB, Director of Procurement and Contracts/Purchasing Agent — Date _____

Approve of Change: _____ Teresa Wilson, City Manager — Date _____

APPROVED AS TO FORM
Legal Department City of Columbia, SC

Requisition # R201330

JUSTIFICATION FOR SOLE SOURCE PROCUREMENT

Based upon the following determination, the proposed procurement action described below is being procured pursuant to the authority of Section 1.16 of the City of Columbia, S.C. Procurement Regulation.

This Department proposes to procure for the Utility Operations (1) **Division,**

Engineering Consulting Services (2)

as a sole source procurement from Black & Veatch (3)

based upon the following justifications

The City of Columbia (Columbia Water) has had an annual water quality consulting contract for the past 15+ years. This annual contract has included routine attendance at monthly Water Quality Committee meetings, periodic review of water quality data, assessment of present and future regulatory compliance, annual update to the recommendations form the 2014 Process Optimization Evaluations report, operator training specific to water treatment, and other special projects as requested.

Black & Veatch has been the water quality consultant for Columbia Water for the last 10+ years. Black and Veatch is a leader in the municipal water treatment industry having multiple experts on staff. Black & Veatch staff have vast knowledge of both the Canal and Lake Murray Water Treatment Plants having worked on multiple projects at both plants over the last 10 years. Due to Black and Veatch's expertise and knowledge of the Columbia Water's water treatment plants, they are able to provide great insight to operational issues and regulatory compliance. This knowledge was of particular help during the October 2015 flood when Columbia Water experienced unprecedented water quality and water plant operations challenges both during the flood event and the months flowing.

The proposed services by Black and Veatch as outlined in the Scope of Services document are critically important the successful operation of the water system. Columbia Water request that this contract for the FY19-20 fiscal year move forward for approval.

This sole source is valid through June 30, 2020

Amount $ 75,000.00

Utility Operations Department	Signature of Department Head	9-6-2019 Date
	Signature of Purchasing Agent	9/12/19 Date
Form must be route in the order of the signatures	Signature of Finance Director	9/25/2019 Date
	Signature of Asst. City Manager	9/27/19 Date
	Signature of City Manager	10/1/19 Date

Notes: (1) Enter Division Name
(2) Enter description of goods or services to be produced
(3) Enter name of sole source contractor
(4) Enter the basis of sole source procurement

Distribution: Original attached to requisition [Form PUR 108201] Copy retained in Department's file. (Rev. 07/2018)

APPROVED AS TO FORM
Legal Department City of Columbia, SC

This agreement may be executed in one or more counterparts, all of which shall be considered one and the same agreement, and shall become a binding agreement when one or more counterparts have been signed by and delivered to each of the parties. Such delivery may occur by facsimile or email/pdf and any counterparts exchanged in this manner shall be considered originals.

BLACK & VEATCH
Building a world of difference.

BLACK & VEATCH CORPORATION
1411 GERVAIS STREET, SUITE 125, COLUMBIA, SC 29201
+1 803-413-4537 P | +1 864-234-0784 F | WWW.BV.COM

City of Columbia
Water Quality Consulting for FY19-20
Proposal for Engineering Services

B&V Project 905145.0008
May 28, 2019

Mr. Jason A. Shaw
Water Engineer
City of Columbia
P. O. Box 147
Columbia, South Carolina 29217

Dear Mr. Shaw:

Black & Veatch is pleased to offer consulting engineering services to the City of Columbia for water quality, treatment, distribution, and regulatory compliance for Fiscal Year 2019-2020. As in the past, these services include routine attendance at Water Quality Committee meetings; periodic review of water quality data; assessment of present and future regulatory compliance; update to the recommendations from the 2014 Process Optimization Evaluations; operator training specific to water treatment; and other special projects as requested.

We propose to provide the above stated scope of services on an as-needed basis for an engineering fee not to exceed $75,000.00 without further written authorization. Compensation shall be based on the attached hourly rate schedule. Expenses shall be billed at cost times a multiplier of 1.0.

Paul Hargette, Senior Process Engineer with Black & Veatch will be the primary contact for these services similar to the last two years. Paul will be assisted as needed by Black & Veatch personnel and may also be assisted by Dr. George Budd, a nationally known water treatment specialist. Dr. Budd, formerly with Black & Veatch, now works for Aquarius Engineering, a Female Business Enterprise.

Thank you for the opportunity to provide this proposal, and we look forward to continuing to assist you with this important work. Should you have any questions, please give me a call.

Very truly yours,

BLACK & VEATCH CORPORATION

Don Franklin

Don E. Franklin, P.E.
Senior Engineering Manager

Enclosure

cc: Clint Shealy, City of Columbia, w/encl.

EXHIBIT A
SCOPE OF SERVICES
BLACK & VEATCH CORPORATION
WATER QUALITY CONSULTING FOR FISCAL YEAR 2019-2020 (WM4263-20)

Project Description: Black & Veatch (Engineer) will serve as the City of Columbia's (City's) professional engineering representative in those phases of the Project to which this Agreement applies and will provide consultation and advice to the City during the performance of their services. The Engineer will provide routine water quality consulting services as requested by the City's staff for the Canal and Lake Murray Water Treatment Plants and the distribution system.

Work shall begin upon execution of this Agreement. Any work requested by the City that is not included in the items listed below shall be classified as Supplemental Services.

Engineer will provide the following specific tasks to perform the Project:

TASK 100 – GENERAL PROJECT ADMINISTRATION

Task 100 includes the following subtasks:

- Provide monthly progress reports, invoicing and schedule updates pertaining to Engineer's portion of the work to the City.
- Communicate with the City through a single point of contact, Engineer's Project Manager.
- Engineer will manage the efforts of its project team members and sub-consultants by assigning manpower, delegate responsibilities, review work progress, monitor budget and schedule, and direct the progress of the work.

TASK 200 – WATER QUALITY COMMITTEE

Engineer will participate and attend the City's monthly Water Quality Committee meetings. These meetings will include a review of monthly water quality data from the treatment facilities and in the distribution system, as well as a discussion of operational issues, regulatory responsibilities, and associated water quality items. A total of twelve (12) meetings are anticipated.

TASK 300 - PROCESS OPTIMIZATION EVALUATION RECOMMENDATIONS

Task 300 includes the following subtasks:

- Review of Water Production Information and Update of Database – The water production information for the previous year will be reviewed and the existing database of water production will be updated. This information will be compared to the demand projections developed as part of the 2014 Process Optimization Evaluations for the Canal and Lake Murray Water Treatment Plants. Observations and recommendations will be provided addressing the timing and priority of current capacity driven Capital Improvement Program projects.
- Review of Water Quality and Current / Pending Regulatory Issues – Engineer will review the previous year's water quality data and provide comments on compliance status with

current and future or potential regulatory requirements. The current Capital Improvement Program project will be reviewed with respect to regulatory or water quality driven projects and recommendations provided to reflect any necessary adjustments.

- Documentation - A Technical Memorandum will be developed to document the results of the review and evaluation of water production and water quality and regulatory issues. A review meeting will be held with City staff following submission of a draft Technical Memorandum. Comments will be incorporated into a final Technical Memorandum.

TASK 400 - OPERATOR TRAINING OF WATER TREATMENT PROCESS

Engineer will provide operator training located at the Canal or Lake Murray Water Treatment Plant. Training will primarily be held in one or two training sessions with the intended focus to present plant operators with information on water treatment techniques in coagulation/flocculation, sedimentation and filtration.

TASK 500 – ADDITIONAL ON-CALL WATER QUALITY SERVICES

Engineer will provide additional water quality services on an on-call basis from the City. These services can include but are not limited to:

- Specific unit process assessment.
- Bench scale testing and analysis of results.
- Installation assistance for backup sodium hypochlorite system.

DELIVERABLES

Deliverables for the project will include a draft Technical Memorandum and final Technical Memorandum documenting the results of the review and evaluation of water production and water quality and regulatory issues as part of Task 300.

ADDITIONAL SERVICES

Additional services are not in the scope of work for this Agreement. These services will be performed at City's request with compensation adjustments. Additional services that City might choose to add to the scope of services include, but are not limited to, the following items.

1. General:

    a. Safety Assessments (Safety issues regarding the design of new facilities and equipment related to this Project are included in the scope of services and compensation for this Agreement).
    b. Security Assessments.
    c. Renderings or photo realistic drawings.
    d. Supplemental engineering work required to meet the requirements of regulatory or funding agencies that become effective subsequent to the date of this agreement.
    e. Preparation for litigation, arbitration, or other legal or administrative proceedings; and appearances in court or at arbitration sessions in connection with bid protests, change orders, or construction incidents.

2. Environmental Assessment:

a. Environmental assessment reports and/or environmental impact statements.
b. Cultural resources and/or archaeological study and reports.
c. Archaeological consultations regarding artifacts that may be uncovered during construction.

3. Testing:

   a. Observing factory tests and/or field retesting of equipment that fails to pass the initial test.

4. Hazardous Environmental Conditions:

   a. Remedial investigation/feasibility study or Phase I environmental site assessment to determine the quantity and location of contamination.
   b. Conduct asbestos or lead based paint abatement or other hazardous material abatement of existing facilities.

5. Conducting pilot plant studies and tests.

CITY RESPONSIBILITIES

The City will furnish, as required by the work and not at the expense of the Engineer, the following items:

1. All maps, drawings, reports, records, audits, annual reports, and other data that are available in the files of the City and which may be useful in the work involved under this Agreement.

2. Access to public and private property when required in performance of the Engineer's services.

3. Manage the performance of other consultants under direct contract to City necessary for the Project. (Coordination and sharing of information with other consultants for the purpose of related Project issues is included in this scope of services and compensation).

4. Notwithstanding anything to the contrary contained herein, City assumes sole responsibility and waives all rights and claims against Engineer for all loss of or damage to property owned by or in the custody of City and any items at the jobsite or in transit thereto (including, but not limited to, construction work in progress), whether such loss or damage results from tortious or non-tortious causes. (Engineer shall be held responsible for repair/replacement of any loss of or damage to property, structure, equipment, etc., specifically caused by the Engineer or a subcontractor of the Engineer).

EXHIBIT B
PROJECT SCHEDULE
BLACK & VEATCH CORPORATION
WATER QUALITY CONSULTING FOR FISCAL YEAR 2019-2020 (WM4263-20)

Engineer proposes to perform the services as detailed in this Scope of Services per the schedule below.

- Meeting Attendance – Meetings will be attended monthly, from July 2019 through June 2020, typically held on the first Thursday of each month at the Canal Water Treatment Plant.

- Technical Memorandum – The draft Technical Memorandum will be developed and submitted in April of 2020 and be based on 2019 calendar year data. The review meeting will be held in May of 2020 and the final Technical Memorandum submitted in June of 2020.

EXHIBIT C
COMPENSATION
BLACK & VEATCH CORPORATION
WATER QUALITY CONSULTING FOR FISCAL YEAR 2018-2019 (WM4263-18)

For the services outlined in this Contract, the City agrees to pay the Engineer as follows:

A. Compensation shall be based on the attached hourly rate schedule, plus subcontractor billings times 1.0 and reimbursable expenses, with a total amount not to exceed seventy-five thousand dollars ($75,000.00). Reimbursable expenses shall include such items as telephone, fax, computers, reproduction, postage, mileage, equipment, and supplies. Work shall begin upon written notification by the City to proceed.

B. For supplemental services, a lump sum amount, or based on the attached hourly rate schedule, plus reimbursable expenses times 1.10, except airfare and travel expenses, which will be billed at cost; plus subcontract billings times 1.05. Reimbursable expenses shall include such items as telephone, fax, computers, reproduction, postage, mileage, equipment, and supplies.

   Each item of supplemental services shall be established and approved in writing before the work is started. The amount billed for each item of supplemental services shall not exceed the amount established and approved for it without further authorization from the City. Additional amounts for supplemental services may be authorized, if necessary, as the work progresses.

C. Monthly payments shall be made to the Engineer by the City based on the Engineer's statement. For payroll multiplier items, the statement shall be itemized to indicate the amount of work performed and the associated reimbursable expenses and subcontract costs. The entire amount of each statement shall be due and payable upon receipt by the City.

Attachment I
Page 1 of 1

Hourly Billing Rates for Personnel	
Category of Personnel	**Billing Rate / Hour**
Client Director	$265
Senior Process Engineer	$230
Project Manager / Senior Engineering Manager	$195
Lead Project Engineer	$145
Design Engineer	$130
Associate Engineer	$115
Senior Design Technician	$125
Design Technician	$110
Structural Engineer	$180
Electrical Engineer	$180
Accountant	$110
Senior Administrative Assistant	$120
Administrative Assistant	$80

The above listed hourly billing rates are valid for the period of July 1, 2019 through June 30, 2020.

EXHIBIT D
SUBCONSULTANT FIRM INFORMATION RECORDS

The Engineer shall list all firms, including minority and female owned firms, providing sub-consulting services under this Agreement. The list shall be submitted in the format provided below. Any proposed changes must be submitted in writing to the City, including the reason(s) for the proposed changes, prior to initiation of any action by the Engineer. Any invoices submitted for payment under this Agreement must include the dollar amount to be paid to each firm listed below for the invoice period.

Firm Name and Address	Contact Name and Telephone Number	Group (MBE, WBE SBE, LBE, Non M/W/S/LBE)	Services to be Provided	Dollar Value of Services
Aquarius Engineering, LLC 267 Hallowell Rd Pownal, ME 04069	Catherine Spenser 207-688-4234	WBE	Water Treatment Staff Training (if requested)	$5,780

KEY:

MBE- Minority Business Enterprise
WBE- Woman Owned Business Enterprise
SBE- Small Business Enterprise
LBE- Local Business Enterprise (per City's definition)

CONTRACT

City of Columbia, South Carolina

WM4481

New 2"/4" PVC/DIP Water Main Upgrades along Eastpine Court and Eastpine Place (MPP)

Bid # 010-19-20-LAG

This Contract is made by and between the City of Columbia, Columbia, South Carolina, hereinafter called Owner, and **North American Pipeline Management, Inc.** with legal address and principal place of business at **PO Box 683638, Marietta GA, 30068**, hereinafter called Contractor. Owner and Contractor in consideration of the mutual covenants hereinafter set forth, agree as follows:

ARTICLE 1. WORK.

1.1 Contractor shall perform the Work as specified or indicated in the Contract Documents.

ARTICLE 2. ENGINEER.

2.1 The Project has been designed by **City of Columbia.**

ARTICLE 3. CONTRACT TIME.

3.1 The Contract Time shall be **ninety (90)** consecutive calendar days from the said date of commencement as defined in the Notice to Proceed (NTP) to fully complete the amount of work herein contemplated.

3.2 Contractor agrees that the Work shall be prosecuted regularly, diligently and uninterruptedly and at such rate of progress as will insure full completion thereof within the Contract Time stated above. It is expressly understood and agreed, by and between Contractor and Owner that the Contract Time is reasonable for the completion of the Work, taking into consideration the average climatic range and usual industrial conditions prevailing in this locality.

ARTICLE 4. CONTRACT PRICE.

4.1 Owner will pay Contractor for performance of the Work in accordance with the Contract Documents in current funds at the contract price agreed upon in the Contractor's Bid Form attached to this Contract which establishes the contract price as **Ninety-Two Thousand, Fourteen Dollars and Zero Cents ($92,014.20).**

ARTICLE 5. APPLICATIONS FOR PAYMENT

5.1 Contractor shall submit Applications for Payment in accordance with Part 15 General Specifications of the City's Engineering Regulations. Applications for Payment will be processed as provided in the Conditions of the Contract.

ARTICLE 6. PROGRESS AND FINAL PAYMENTS

6.1 Owner will make progress payments on account of the Contract Price on the basis of Contractor's Applications for Payment, monthly during construction as provided below. All progress payments will be on the basis of the progress of the Work measured by the schedule of values provided for in the General Specifications.

6.2 Upon final inspection and acceptance of the Work, in accordance with Part 15 General Specifications, Owner will pay the remainder of the Contract Price.

ARTICLE 7. LIQUIDATED DAMAGES

7.1 Owner and Contractor recognize that time is of the essence of this Contract and that Owner will suffer financial loss if the Work is not completed within the Contract Time (and specific milestones) specified in Article 3 above, plus any extensions thereof allowed. They also recognize the delays, expense and difficulties involved in proving, in a legal proceeding, the actual loss suffered by Owner if the Work is not completed on time. Accordingly, instead of requiring any such proof, Owner and Contractor agree that as liquidated damages for delay (but not as a penalty) Contractor shall pay Owner **Two Hundred Fifty Dollars and Zero Cents ($250.00)** per day for each calendar day of delay until the Work is complete.

7.2 This liquidated damages provision is non-exclusive and not intended to limit Owner's remedy for breach of this Contract or delay in Contract Times.

ARTICLE 8. ASSURANCE

8.1 Contractor has familiarized himself with the nature and extent of the Contract Documents, Work, locality, and with all local conditions and Federal, State and local laws, ordinances, rules and regulations that in any manner may affect cost, progress or performance of the Work.

8.2 Contractor has studied carefully all reports of investigations and tests of subsurface and latent physical conditions at the site or otherwise affecting cost, progress or performance of the Work that were relied upon by Engineer in the preparation of the Drawings and Specifications and which have been identified in Contract Documents.

8.3 Contractor has made or caused to be made examinations, investigations and tests and studies of such reports and related data [in addition to those referred to in the above paragraph] as Contractor deems necessary for the performance of the Work at the Contract Price within the Contract Time and in accordance with the other terms and conditions of the Contract Documents; and no additional examinations, investigations, tests, reports or similar data are or will be required for such purposes.

8.4 Contractor has correlated the results of all such observations, examinations, investigations, tests, reports and data with the terms and conditions of the Contract Documents.

8.5 Contractor has given Engineer written notice of any conflict, error or discrepancy that Contractor has discovered in the Contract Documents and the written resolution thereof by Engineer is acceptable to Contractor.

8.6 Contractor agrees that the Contract Documents are sufficient in scope and detail to indicate and convey understanding of all terms and conditions for performance of the Work.

ARTICLE 9. CONTRACT DOCUMENTS.

9.1 Contractor agrees, under the terms as stated in the Specifications and Contract Documents and at his/its/their own proper cost and expense, to furnish all the materials, supplies, machinery, equipment, tools superintendence, labor, insurance, and other accessories and services necessary to complete the said project in accordance with the conditions and prices stated in the Proposal, the Instructions to Bidders, the General Conditions of the Contract or General Specifications, the construction specifications, provisions of the Contract Documents, the plans, which include all maps, plats, blue prints, and other drawings and printed or written explanatory matter thereof.

9.2 The Contract Documents that comprise the Contract between Owner and Contractor are attached hereto and made a part hereof and consist of the following:

9.2.1 Invitation To Bid.

9.2.2 Instructions To Bidders.

9.2.3 Bid Form.

9.2.4 This Contract.

9.2.5 Performance Bond & Payment Bond.

9.2.6 Special Provisions

9.2.7 Part 15 "General Specifications", Part 16 "Specifications for Water Distribution System, Materials, and Construction", Part 18 "Specifications for Roadway Improvements, Materials and Construction", Part 20 "Specifications for Sodding, Fertilizing and Seeding", all of the of the City of Columbia's Engineering Regulations

9.2.8 Location Map

9.2.9 Permits

9.2.9 Drawings, numbered **__1__ through __7__ inclusive** and dated **__6/3/2019__**.

9.2.10 Any modification, including Change Orders, duly delivered after execution of Contract.

9.2.11 The Mentor Protégé Program (MPP) Guidelines and the Mentor Protégé Program (MPP) Implementation Plan.

ARTICLE 10. TERMINATION

The City May terminate this contract at any time upon any of the following grounds: 1) Failure by the City to appropriate funds in its budget to pay the respondent for the requested service; 2) The respondent fails to perform any of the services required in this contract, and does not correct such deficiency within fifteen (15) days after having been notified of such deficiency by the City; 3) Force majeure; 4) Upon expiration of the term of the agreement; 5) By mutual agreement; and 6) For the convenience of the City, at the City's discretion, for any reason whatsoever deemed to be in the best interests of the City.
In the event that the contract is wrongfully terminated under any of the other grounds enumerated herein, termination shall be treated as a termination for convenience. If the contract is terminated for convenience,

or wrongfully terminated upon any of the other grounds enumerated herein, the Contractor shall be entitled to payment as follows: the actual cost of the work completed in conformity with the agreement plus ten percent (10%) for overhead and profit. There shall be deducted from such sums as provided in this subparagraph the amount of any payments made to the Contractor prior to the date of termination of the agreement. The Contractor shall not be entitled to any claim against the City for any additional compensation or damages in the event of such termination and payment.

ARTICLE 11. MISCELLANEOUS

11.1 Terms used in this Contract that are defined in Part 15 General Specifications shall have the meanings assigned in the Conditions of the Contract.

11.2 Neither Owner nor Contractor shall, without the prior written consent of the other, assign or sublet in whole or in part any interest under any of the Contract Documents; and, specifically but without limitation, Contractor shall not assign any monies due or to become due without the prior written consent of Owner. In case Contractor assigns all or any part of any monies due or to become due under this Contract, the instrument of assignment shall contain a clause substantially to the effect that it is agreed that the right of the assignee in and to any monies due or to become due to Contractor shall be subject to prior claims of all persons, firms and corporations for services rendered or materials supplied for the performance of the Work called for in this Contract.

11.3 Owner and Contractor each binds himself, his partners, successors, assigns and legal representatives in respect to all covenants, Contracts and obligations contained in the Contract Documents.

11.4 The Contract Documents constitute the entire Contract between Owner and Contractor and may only be altered, amended or repealed by a Modification.

11.5 This Contract does not commit the City of Columbia to pay for any pre-bid costs. Any costs associated with IFB preparation, pre-bid conferences and any other activity prior to award of a contract shall be at the bidder's expense. Rooms, meals, travel, telephone, data processing, administrative and clerical costs associated with the project shall be at the bidder's expense.

This Contract is subject to the final approval of Council and shall become effective on the date listed on the subsequent Notice to Proceed (NTP) and City of Columbia Purchase Order. The Contractor shall not perform work on or incur any costs associated with this contract prior to the commencement date listed on the Notice to Proceed and the City issued purchase order for work outlined herein. The City assumes no liability for any expenses incurred prior to the issuance of the NTP and purchase order.

Contractor	Owner
North American Pipeline Management, Inc.	City of Columbia, SC
BY	BY
Dorelly A. Herford, President	Teresa Wilson, City Manager
(CORPORATE SEAL)	(CORPORATE SEAL)
Attest	Attest
Address for giving notices:	Address for giving notices:
12 East Montclair Avenue	Department of Procurement and Contracts
Greenville, SC 29609	1800 Main Street, 2nd Floor
	Columbia, SC 29201
Date:	Date:

Note: If Contractor is a corporation, an affidavit giving the principal the right to sign the Contract must accompany the executed Contract.

APPROVED AS TO FORM

Legal Department City of Columbia, SC

Event Number	BID 010-19-20-LAG	**Organization**	City of Columbia, SC
Event Title	New 2"/4" PVC/DIP Water Main Upgrades a	**Workgroup**	Purchasing
Event Description	Pre-Bid Meeting is scheduled for August 13,	**Event Owner**	Latisha Grice
Event Type	IFBs	**Email**	latisha.grice@columbiasc.gov
Issue Date	7/23/2019 11:53:34 AM (ET)	**Phone**	
Close Date	8/29/2019 03:00:00 PM (ET)	**Fax**	

Responding Supplier	City	State	Response Submitted	Lines Responded	Response Total
North American Pipeline Manag	Marietta	GA	8/29/2019 02:38:19 PM (ET)	1	$92,014.00
G H Smith Construction, Inc	Columbia	SC	8/29/2019 09:57:46 AM (ET)	1	$103,390.00
Carolina Tap & Bore, Inc.	West Columbia	SC	8/29/2019 12:06:57 PM (ET)	1	$118,580.00
Stutts & Williams, LLC	Lexington	SC	8/29/2019 10:22:48 AM (ET)	1	$135,555.00
LAD Construction, LLC	Swansea	SC	8/29/2019 01:44:02 PM (ET)	1	$168,200.00

Please note: Lines Responded and Response Total only includes responses to specification. No alternate response data is included.

CITY OF COLUMBIA

INTER-OFFICE MEMORANDUM

TO: Juliet Nelly, Program Compliance Administrator

FROM: Latisha A. Grice, Bid Coordinator
Department of Procurement and Contracts

DATE: August 30, 2019

SUBJECT: PROJECT: BID# 011-19-20-LAG 2"/4" PVC/DIP Water Main Upgrades along Eastpine Court and Eastpine Place (WM4481)

Bids for this project were opened publicly at 3:00 p.m., August 29, 2019 in the second floor Conference Room, 1800 Main Street.

Bids submitted for the referenced project were in participation with the Mentor Protégé Program (MPP). The apparent responsive low bidder is North American Pipeline Management, Inc. Marietta GA, at $92,014.00.

Please review for Mentor Protégé Program compliance and return your approval as soon as possible. Also, please verify the percentages listed on the Business Information Record and check for consistency to the noted dollar amount.

Please indicate your approval with your signature below and return to me when you have completed your review.

Thank You.

Review Approved: Juliet N Nelly **DATE:** 9/6/19
Juliet Nelly, Compliance Administrator

CITY OF COLUMBIA

We Are Columbia

Department of Utilities and Engineering
Compliance Division
P.O. Box 147 | Columbia, South Carolina 29217
Phone: 803-545-3049 Fax: 803-545-4130

MENTOR PROTÉGÉ PROGRAM
Implementation Plan

Date: 8/29/2019

Project Number: 010-19-20-LAG WM4481

Mentor: North American Pipeline Mgmt.

Project Name: WM Upgrade Eastpine Ct/Pl

Protégé: Southern Roots Landscaping Mgmt.

Duration of the Project: 90 days

Project Contract Amount: $92,014.00

Protégé Amount: $19,322.00

Statement of Commitment: Both Mentor and Protégé are committed to providing an adequate amount of resources and effort to execute the plan below. Mentor and Protégé acknowledge the Implementation Plan is a joint plan and agree to meet at least quarterly to verify compliance with this Plan.

1. How do the Mentor and Protégé intend to work together on the designated project? *Address contractual relationship, general roles and informal teaming arrangements.*

If awarded, NAPM will handle general project management and SR's PM will work closely with NAPM's PM on daily oversight and tracking. NAPM will perform main pipe scope and SR will perform misc. pipe scope, trucking and restoration work. NAPM & SR will share a common lay down yard in Columbia, SC to partner on daily schedule, material logistics and safety communication.

2. How will the specific, quantitative goals in the Annual Business Plan and MPP Agreement be implemented via the work on the project? *Address general goals here and specific goals in question 9.*

SR partnered with NAPM during estimation phase contacting Material suppliers and utilizing estimation software. If team is awarded project, the project's scale will provide opportunity for SR to take steps toward its quantitative Bonding, Insurance and Revenue goals; this will also encourage steps toward its equipment goals.

3. How will the team focus on developing protégé's business and implementing the actions necessary to obtain results reflected in the Mentor-Protégé Agreement? *Identify milestones, thresholds, or other indicators team that would indicate success is being achieved.*

NAPM/SR will set schedule/production/cost for the project; then collaborate as a team to achieve those goals. Team will track project costs and progress via monthly work in progress meetings and discuss corrections as needed.

CITY OF COLUMBIA

Department of Utilities and Engineering
Compliance Division
P.O. Box 147 | Columbia, South Carolina 29217
Phone: 803-545-3049 Fax: 803-545-4130

4. Proposed manpower and resources from both the Mentor and the Protégé is required for the project. *Address key personnel, equipment/materials, and insurance/bonding. Address special arrangements where applicable.*

Mentor:

Will provide lead PM, bonding, insurance, material purchase assistance and labor/equipment for main pipe work.

Protégé:

Will provide Asst. PM, material purchase and labor/equipment for misc. pipe work, trucking and restoration.

Subcontractors:

NAPM will procure any needed subcontractors and SR will assist with supervising their activities.

Special Arrangements:

NAPM/SR will each provide a PM that will work closely to management project.

5. What scope of work to be performed by each participant of the MPP team?

a. Description of Mentor's responsibilities:

Contract administration, subcontractor procurement, pay applications, as-built tracking, and main pipe & appurtenance installation.

b. Description of Protégé's responsibilities on project:

Submittals, RFIs, permits, misc. pipe work, trucking, and restoration.

c. Description of responsibilities that will be completed as a team:

Estimation, scheduling, project management, deliverable tracking, safety, material purchase.

6. What is the anticipated duration (in months) of each major phase of the project? During which phases will the Protégé be utilized?

Estimated project duration is 3 months (90 days). SR will have roles during the pre-construction, construction and post-construction phases of the project.

CITY OF COLUMBIA

We Are Columbia

Department of Utilities and Engineering
Compliance Division
P.O. Box 147 | Columbia, South Carolina 29217
Phone: 803-545-3049 Fax: 803-545-4130

7. **How will the team comply with and maintain the focus on the requirements of the program for the duration of the project?**

Project specific, NAPM and SR's PMs will collaborate on schedule, work scope assignments, deliverable and progress tracking; as well as make sure necessary MPP forms are completed and submitted when required.

8. **What are the team's specific, quantitative goals and milestones for the current project?**

NAPM and SR wish to continue their positive relationship and reputation with the CoC. If awarded, NAPM/SR will be committed to regular communication with CoC's mngt. personnel during each phase of the project and partner to achieve proper construction, minimum disruption to public and complete project on-time.

9. **Outline of Regularly Scheduled meeting between Mentor and Protégé (Progress reporting).**

NAPM/SR PMs will communicate daily on project's schedule and logistics. Shared lay down yard will by utilized for crew safety meetings during active construction. NAPM/SR's management will meet monthly to review overall project cost, production and status; as well as complete quarterly MPP reports when necessary.

10. **Define payment schedule and financial terms identifying milestones for initial, progress and final payments.**

NAPM, SR and subs (if applicable) will submit daily logs of completed work to be summarized on a monthly pay application. NAPM will review and submit approved applications for payment to CoC on an agreed date (typically 25th). SR and subs will be on a NET 30 day pay schedule with final retainage released upon project close out.

CITY OF COLUMBIA

Department of Utilities and Engineering
Compliance Division
P.O. Box 147 | Columbia, South Carolina 29217
Phone: 803-545-3049 Fax: 803-545-4130

11. List the Subcontractors that will be used on this project, as well as the information requested below: (The Subcontractor(s) listed below will NOT consist of your Protégé.)

Subcontractor's Name	Telephone	Address	Who will they report to?	Contract Amount	MPP, MBE, WBE, SBE	Percentage of Contract
N/A						

12. What percentage of the project is being implemented by the Protégé? Must equate to a minimum of 20% of total contract amount.

Protégé Contract Value: 19,322.00

Percentage of Contract: 21% (Minimum of 20% of total contract amount is required)

CITY OF COLUMBIA

Department of Utilities and Engineering
Compliance Division
P.O. Box 147 | Columbia, South Carolina 29217
Phone: 803-545-3049 Fax: 803-545-4130

MENTOR-PROTEGE IMPLEMENTATION PLAN SIGNATURE SHEET

IN WITNESS WHEREOF, the parties hereto have caused these presents to be executed by their proper officials thereunto duly authorized as of the dates below indicated:

EXECUTED by NAPM, Inc. (Mentor Firm) this 29th day of August 2019.
Corporate SEAL

By: _____
Title: Dorelly A. Herford, President

ATTEST:
By: _____
Title: Brandon Leipprandt, Vice President

EXECUTED by Southern Roots, LLC. (Protégé Firm) this 29th day of August, 2019.
Corporate SEAL
By: _____
Title: Bryce Yarbrough, Owner

ATTEST:
By: _____
Title: Brandon Leipprandt, Vice President

RECOMMENDED FOR APPROVAL:

EXECUTED by the Department of Utilities & Engineering, Compliance Division on this 6 day of September, 2019.

By: _____

Title: _____

Moore, Erika

From: Grice, Latisha A
Sent: Tuesday, October 1, 2019 11:40 AM
To: Grice, Latisha A
Subject: FW: BID #010-19-20-LAG - New 2"/4" PVC/DIP Water Main Upgrades along Eastpine Ct & Eastpine Pl.

From: Winburn, David M
Sent: Tuesday, September 03, 2019 9:40 AM
To: Grice, Latisha A <Latisha.Grice@columbiasc.gov>; Nelly, Juliet M <Juliet.Nelly@columbiasc.gov>
Subject: RE: BID #010-19-20-LAG - New 2"/4" PVC/DIP Water Main Upgrades along Eastpine Ct & Eastpine Pl.

The apparent low bidder is North American Pipeline Management, Inc. at $92,014.00. It is recommended that City Council accept the proposed bid and a 20% contingency for a total cost of $110,416.80.

Please let me know if you need any additional information. Thanks!

David

David Winburn
Senior Civil Engineer

Columbia Water
Department of Engineering

PO Box 147 | Columbia, SC 29217
David.Winburn@ColumbiaSC.gov
Phone: (803) 376-3059
Cell: (803) 429-8702

ColumbiaSC.gov

Richland County Internet Mapping
Đ®±ƒ»½¬ ß®»¿ -
Đ®±ƒ»½¬ ß®»¿ -
Boyds Pond Three
Boyds Pond Two
The Members Club at WildeWood
Wildewood Golf Shop
Jackson Creek
Leaflet | Map produced by RC GIS Dept. Roads basemap © Google. Map data © Richland County, SC
1,640 ft

Requisition # R200056 –

JUSTIFICATION FOR SOLE SOURCE PROCUREMENT

Based upon the following determination, the proposed procurement action described below is being procured pursuant to the authority of Section 1.16 of the City of Columbia, S.C. Procurement Regulation.

This Department proposes to procure for the Water (1) Division,

Valve insertion equipment to install the Team valve ranging from 4" to 12" water main sizes. (2)

as a sole source procurement from TEAM Industrial Services (3)

based upon the following justifications: TEAM is the only authorized dealer for installing (4)

valve insertions.

This sole source is valid through 09/11/2019 Amount $ 140,100.00

Utility Operations/WD(M)		9/25/19
Department	Signature of Department Head	Date
	Signature of Purchasing Agent	9/25/19 Date
Form must be routed in the order of the signatures	Signature of Finance Director	10/1/2019 Date
	Signature of Asst. City Manager	10/01/19 Date
	Signature of City Manager	10/2/19 Date

Notes. (1) Enter Division Name
(2) Enter description of goods or services to be procured
(3) Enter name of sole source contractor
(4) Enter the basis of sole source procurement

Distribution: Original attached to requisition (Form PUR 108201) Copy retained in Department's file. (Rev. 06/2016)

This agreement may be executed in one or more counterparts, all of which shall be considered one and the same agreement, and shall become a binding agreement when one or more counterparts have been signed by and delivered to each of the parties. Such delivery may occur by facsimile or email/pdf and any counterparts exchanged in this manner shall be considered originals.

TEAM® Industrial Services

August 12, 2019

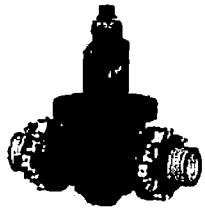

City Of Columbia - Water Distribution
4013 W Beltline Blvd
Columbia, SC 29204

Phone: (803) 429-5908
Mobile:
Fax:
E-mail: jwyates@columbiasc.net

Attention: Jeremy Yates

Subject: **TEAM Resilient Wedge InsertValve Installation Equipment**

Quote Number: 1409-PA-0319-0002

Dear Mr. Yates:

TEAM Industrial Services, Inc. is pleased to submit the following quotation for the above subject work. We trust the information provided is complete and sufficient for your evaluation and consideration. Should you have any questions or require additional information, please feel free to contact us anytime at 704-737-8825. We assure you of our prompt attention.

Thank you for considering TEAM Industrial Services, Inc. for your live valve insertion requirements. We look forward to working with the City Of Columbia - Water Distribution supporting their valve insertion needs.

Regards,

Michael J Mecredy
Service Line Manager - InsertValve / Water & Waste-Water
704-737-8825

Cc: Brad Penley – Porter Associates
David Miller – TEAM Charlotte, NC Office

TEAM® Industrial Services

Quote No.: 234-PA-0217-0001
August 12, 2019

Extent of Work:

TEAM Industrial Services, Inc. is pleased to provide this quotation to meet your live valve insertion needs. The following equipment, material, equipment rental, and field technician(s) to perform training on a live pressure application will be provided.

Scope of work:

- Training Installation of Ductile Iron Insertion Valves for ***City Of Columbia - Water Distribution*** field personnel

Material supplied by TEAM Industrial Services, Inc.

- Ductile Iron Insertion Valves epoxy coated, open left, 2" standard operating nut
- Misc. hardware for the insertion valves (Split MJ Retainer glands, bolts, nuts, gaskets)

4", 6" and 8" Equipment supplied by TEAM Industrial Services, Inc.

- T2-30 Hydraulic Tapping Machine
- Insertion Tool w/holder
- 4" - 8" Bonnet Insertion housing
- 4" - 8" Vacuum Assembly (With 10' Hose)
- 4" - 8" Insert tapping housing
- 4" - 8" Temp installation valve
- 4" - 8" Pilot Drill
- 4" - 8" Pilot Tip
- 4" cutter (through 5.00 pipe O.D.)
- 6" cutter (through 7.60 pipe O.D.)
- 8" cutter (through 9.40 pipe O.D.)
- 4" Installation Spacer
- 6" Installation Spacer

Optional 10" and 12" Equipment supplied by TEAM Industrial Services, Inc.

- 10" - 12" Bonnet Insertion housing
- 10" - 12" Vacuum Assembly
- 10" - 12" Insert tapping housing
- 10" - 12" Temp installation valve
- 10" - 12" Pilot Drill
- 10" - 12" Pilot Tip
- 10" cutter (through 11.20 pipe O.D.)
- 12" cutter (through 13.50 pipe O.D.)
- 10" Installation Spacer

TEAM® Industrial Services

Quote No.: 234-PA-0217-0001
August 12, 2019

City Of Columbia - Water Distribution to Supply:

- Lifting/Rigging Service (skill, labor and equipment) for the duration of this project.
- Make all necessary trade union arrangements. Team's technicians are unaffiliated.
- Scaffolding or man-lift if required
- Maintain a suitable and safe work environment including;
    - On site safety competent person(s)
    - A dry work area (gravel the trench base, work tent, trash pumps, etc)
    - Traffic control personnel, flags, barricades, cones
    - Adequate lighting
- Pay for all extra site specific training and PPE gear, licenses and inspection fees
- Provide suitable access from public roadway to point of work.
- Support labor
    - 4" to 8" One Laborer
- 110 cfm./125 psi air compressor
- Protection and security of equipment while on site. Including;
    - Blankets or external heat source during cold weather
    - Watchmen when equipment is left on site for extended periods of time.
- Excavation** and shoring (OSHA standards), backfill and site restoration.
- The design and construction of concrete support, joint bracing and thrust blocking
- Any and all valve boxes and covers, extension rods, valve keys, etc. to access and operate the valve.
- Provide any necessary environmental containment and clean-up of debris resulting from The services rendered.

Valve and Line Specifics

Note: TEAM Industrial Services, Inc. should be informed if pipe O.D. or pressure class is different as stated below. Price is based upon equipment and insertion valves required to perform the referenced project above.

Line Pressure:	<150 PSI
Line Temperature:	Ambient
Line Contents:	Water
Flow Rate:	_____
Pipe Material:	Cast Iron / DIP / C900
Pipe Outside Diameter:	_____Verified prior to ordering material
Pipe inside Diameter	_____
Pipe Pressure Class:	_____
Direction of Opening	Open left
Special Valve Requirements	_____

Note: Price is estimated, customer to provide actual system conditions. Team Industrial Services, Inc. reserves the right to adjust the quotation accordingly.

TEAM® Industrial Services

Quote No.: 234-PA-0217-0001
August 12, 2019

Quotation:

Our base price for the supply of TEAM InsertValve equipment, as described in strict accordance with this proposal and the following conditions in US dollars, is as listed below, not including applicable sales taxes:

Total Price for InsertValve Machinery Package 4"through 8":	**$ 61,800.00**
Two days training:	**$ 4,000.00**
Freight (not to exceed)	**$ 2,000.00**
Total estimated purchase price	**$ 67,800.00**

***Price adder for 10" and 12" InsertValve Machinery:**	**$ 62,800.00**
Price adder for Hydraulic Power Unit (if needed):	**$ 9,500.00**

***Larger equipment can be added at a later date if desired**

- The above outlined price is based upon ordering material on a routine basis. Additional costs will apply if order is changed to priority status.
  (Delivery for 4" - 12" insertion equipment: 4 – 12 weeks ARO)

Conditions:

- Rates are based on work taking place Monday thru Friday on a non-holiday basis.
- Observed holidays (see "Year 2019 Statutory Holidays" section of this proposal) are billed as premium time at double the straight time rate with an eight– (8) hour minimum charge.
- Standby rates for lost time due to delays beyond our control are charged at:

  Straight Time: $50.00/ hour per technician/Overtime: $60.00/hour per technician
  Straight Time: $80.00/ hour Field Supervisor/Overtime: $98.00/hour Field Supervisor
  Equipment See stated equipment rates above

  Straight time is defined as all hours between 8am and 5pm Monday through Friday. Overtime is defined as all hours before 8am and after 5pm Monday through Friday and all weekend hours.
- All technical changes to work scope must be reported to TEAM Industrial Services, Inc. management prior to the start of work.
- Should TEAM Industrial Services, Inc. be required to supply any item not listed in our scope of work, extra charges will apply.
- During the hot tap process there could be unforeseen circumstances, i.e. internal line conditions that could hinder retaining the coupon.
- Extra costs related to extraordinary circumstances requiring additional cutter sharpening, additional sealing elements, etc. shall be at the customer's expense
- Due to unknown pipe/ system conditions, team does not guarantee a 100% seal.

TEAM® Industrial Services

Quote No.: 234-PA-0217-0001
August 12, 2019

Terms:

- Delivery as required with 21 days advance notice for normal services. Unless otherwise agreed to by both parties, earlier deliveries may result in additional mobilization costs (i.e. - airfares, travel time, etc.).
- The prices quoted herein will be held firm 60 days from date on quote, provided that TEAM Industrial Services, Inc. receives a purchase order in the next 60 days.
- Any changes to the scope of work will allow TEAM Industrial Services, Inc. – TMS Division to re-quote, if necessary.
- Net 30 days upon receipt of invoice. **NO RETAINAGE ALLOWED**
- TEAM Industrial Services, Inc.'s standard terms and conditions apply.

2019 Price List

Resilient Wedge InsertValve
(Valve only)

Part Number	Size	OD Range	Price	Packaged Weight
IV-0400-L IV-0400-L-O	4"	5.11" – 5.26" 5.27" – 5.55"	$ 3,700 $ 3,900	248 lbs.
IV-0600-L IV-06-00-L-O	6"	6.625" – 7.20" 7.21" – 7.50"	$ 3,950 $ 4,350	470 lbs.
IV-0800-L IV-0800-L-O	8"	8.625" – 9.30" 9.31" – 9.55"	$ 4,950 $ 5,350	673 lbs.
IV-1000-L IV-1000-L-O	10"	10.75" – 11.50" 11.51" – 11.60"	$ 9,200 $ 9,875	1150 lbs.
IV-1200-L-U IV-1200-L IV-1200-L-O	12"	11.61" – 12.45" 12.75" – 13.55" 13.56" – 13.95" 13.96" – 14.50"	Consult Factory $ 10,950 $11,625 Consult Factory	1450 lbs.

1. **Prices do not include Megalugs.**
2. **Prices do not include installation.**
3. **Prices do not include freight.**

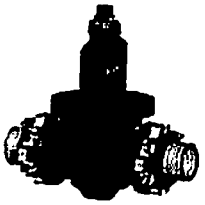

CLASSIFIED c UL us WATER QUALITY

**Excavation recommendations on next page

TEAM® Industrial Services

Quote No.: 234-PA-0217-0001
August 12, 2019

EXCAVATION FOR INSERT VALVE

4" – 8" Insert Valves for Working Pressures less than 150 psi

If a pipe joint is encountered during excavation, it is required to keep edge of Valve 18" away from coupling or bell.

(Transite A/C), Thin-walled steel and some (PVC non pressure pipelines) require thrust blocks to restrain valve before first closure of valve. Note: Drawing shows 18" under pipe for bell & spigot type pipe. If this application requires a thrust block, additional depth is required. (Typically 2' deep by 3' the approximate Laying length of the valve) This area needs to be filled with concrete and cure prior to closing of the valve.

Customer to provide support blocking to be placed under pipe during installation

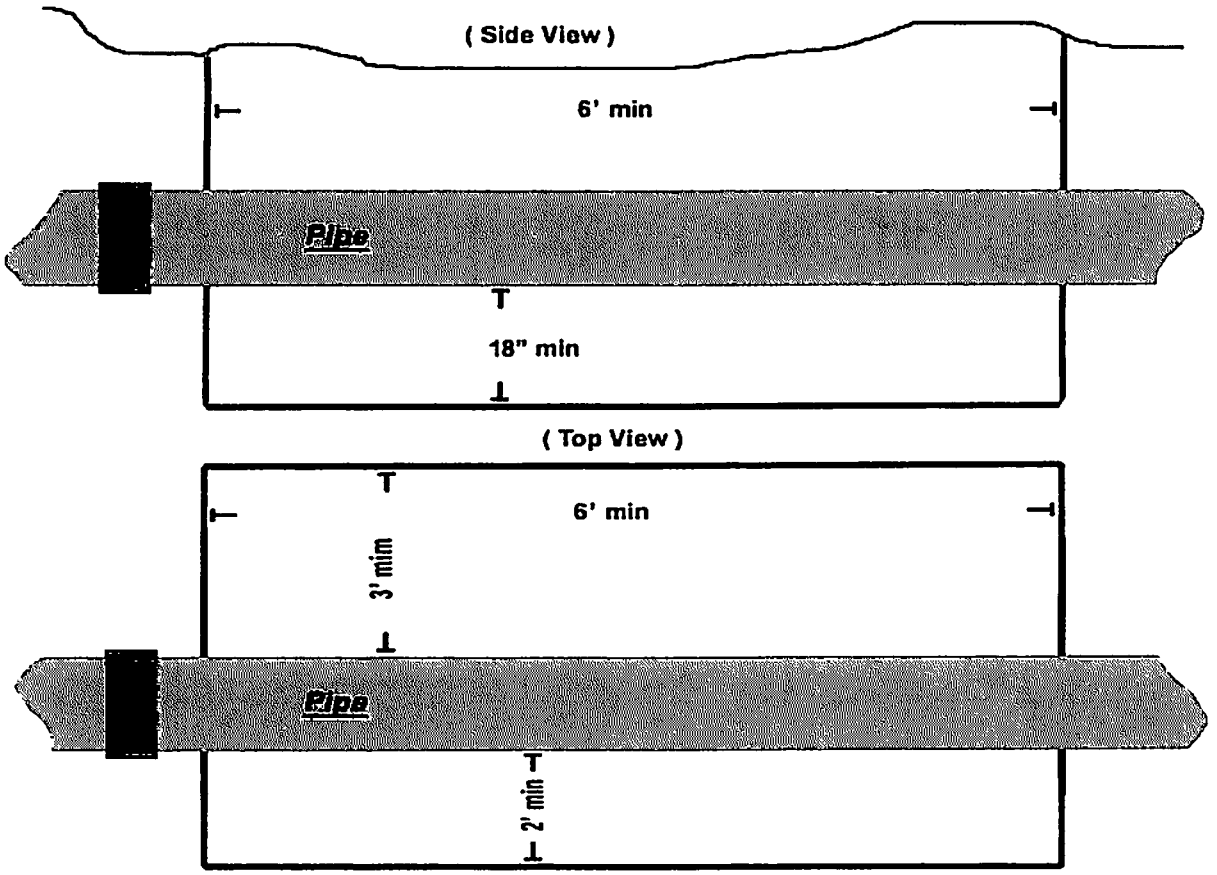

- *Excavation must be 8' min length for 10" and 12" installations*

Acceptance to the terms and conditions:

Signature by authorized person **Printed Name** **Date**

Contract Amendment # 2

Wastewater Collection Flow Monitoring Services
Project Number: CIP# SS7306

Woolpert, Inc.

October 17, 2019

Description of Change: Request change in Agreement for Engineering Services between the City of Columbia (City) and Woolpert, Inc. (Engineer) dated February 25, 2019 (Agreement) to decrease funding in the original contract amount by $92,404.00 (amount remaining of original budgeted amount as of July 1, 2019) and increase budget amount by $157,419.00 to provide for the agreed upon annual budget extension of the contract to June 30, 2020.

All other provisions of the Agreement, except as modified herein or changed, remain in full force and effect.

Proposed Change and Basis for Payment:

Original Contract Price:	**$184,560.00**
Amendment #1 (time extension at no cost change)	$0.00
Current Contract Total:	**$184,560.00**
This Change Amendment 2:	
• Decrease original contract price by -$92,156.00 = $92,404.00 contract value for the Base Year of the contract.	-$92,156.00
• Renewal Year 1 – Add amount remaining from the Base Year of the contract, $92,156.00, then add additional funding of $157,419.00 for Renewal Year 1 total = $249,575.00)	$249,575.00
Revised Contract Price:	**$341,979.00**

This Change is Acceptable:

CONTRACTORS'S NAME:

Signature _____ Eric MacDonald (Please Print Name) Date: 11/6/2019

City of Columbia:

By: _____ Date: _____
Joseph D. Jaco, P.E. Director of Utility Operations

By: _____ Date: _____
Clint E. Shealy, P.E., Assistant City Manager for Columbia Water

By: _____ Date: _____
Sandra A. Wright, CPPB, Director of Procurement and Contracts/Purchasing Agent

Approve of Change: _____ Date: _____
Teresa Wilson, City Manager

APPROVED AS TO FORM
Legal Department, City of Columbia, SC

AIA® Document B101™ – 2017

Standard Form of Agreement Between Owner and Architect

AGREEMENT is entered into as of the date of the last signature affixed hereto.
(Paragraph deleted)
BETWEEN the Architect's client identified as the Owner:
(Name, legal status, address and other information)

City of Columbia-Purchasing Agent
Office of Procurement and Contracts
1800 Main St, Second Floor
Columbia, SC 29201
(803) 545-3470
procurement@columbiasc.gov

and the Architect:
(Name, legal status, address and other information)

Goodwyn Mills & Cawood, Inc. (GMC)
1219 Wayne Street
Columbia, SC 29201

for the following Project:
(Name, location and detailed description)

SS7382 Wastewater Compliance and Lift Station Maintenance Building
S/S Simmon Tree Lane
Parcel #R11000-01-11, located at the corner of Simmon Tree Lane and Metro Lane
GMC Project No. ACOL190007
City of Columbia Procurement Method: RFQ013-18-19-JAG

The Owner and Architect agree as follows.

ADDITIONS AND DELETIONS:
The author of this document has added information needed for its completion. The author may also have revised the text of the original AIA standard form. An *Additions and Deletions Report* that notes added information as well as revisions to the standard form text is available from the author and should be reviewed. A vertical line in the left margin of this document indicates where the author has added necessary information and where the author has added to or deleted from the original AIA text.

This document has important legal consequences. Consultation with an attorney is encouraged with respect to its completion or modification.

Init.
/

AIA Document B101™ – 2017. Copyright © 1974, 1978, 1987, 1997, 2007 and 2017 by The American Institute of Architects. **All rights reserved. WARNING: This AIA® Document is protected by U.S. Copyright Law and International Treaties. Unauthorized reproduction or distribution of this AIA® Document, or any portion of it, may result in severe civil and criminal penalties, and will be prosecuted to the maximum extent possible under the law.** This document was produced by AIA software at 10:20:31 ET on 10/11/2019 under Order No.1831144354 which expires on 03/12/2020, and is not for resale.
User Notes:
(927742022)

TABLE OF ARTICLES

1 INITIAL INFORMATION

2 ARCHITECT'S RESPONSIBILITIES

3 SCOPE OF ARCHITECT'S BASIC SERVICES

4 SUPPLEMENTAL AND ADDITIONAL SERVICES

5 OWNER'S RESPONSIBILITIES

6 COST OF THE WORK

7 COPYRIGHTS AND LICENSES

8 CLAIMS AND DISPUTES

9 TERMINATION OR SUSPENSION

10 MISCELLANEOUS PROVISIONS

11 COMPENSATION

12 SPECIAL TERMS AND CONDITIONS

13 SCOPE OF THE AGREEMENT

ARTICLE 1 INITIAL INFORMATION

§ 1.1 This Agreement is based on the Initial Information set forth in this Section 1.1.
(For each item in this section, insert the information or a statement such as "not applicable" or "unknown at time of execution.")

§ 1.1.1 The Owner's program for the Project:
(Insert the Owner's program, identify documentation that establishes the Owner's program, or state the manner in which the program will be developed.)

Upon written notification by the City to proceed, the Engineer shall provide the scope of services more fully described in Exhibit A. attached hereto. The Engineer shall perform any and all incidental services not specifically set forth in Exhibit A, which are necessary tofully complete the scope of services described in Exhibit A .

§ 1.1.2 The Project's physical characteristics:
(Identify or describe pertinent information about the Project's physical characteristics, such as size; location; dimensions; geotechnical reports; site boundaries; topographic surveys; traffic and utility studies; availability of public and private utilities and services; legal description of the site, etc.)

A new 7,600 SF Wastewater Compliance and Lift Station Maintenance Facility with an attached 5,000 SF workshop/warehouse located across from the existing MWWT Administration/Laboratory Building located at 1200 Simmon Tree Lane, Columbia, SC 29201. This project also includes a large covered storage shed for City equipment with proper egress to allow for tractor trailer access located within the plant site beside the Equalization (EQ) basin and a new Guard House and perimeter fencing to secure the site.

§ 1.1.3 The Owner's budget for the Cost of the Work, as defined in Section 6.1:
(Provide total and, if known, a line item breakdown.)

Init. /

AIA Document B101™ – 2017. Copyright © 1974, 1978, 1987, 1997, 2007 and 2017 by The American Institute of Architects. All rights reserved. WARNING: This AIA® Document is protected by U.S. Copyright Law and International Treaties. Unauthorized reproduction or distribution of this AIA® Document, or any portion of it, may result in severe civil and criminal penalties, and will be prosecuted to the maximum extent possible under the law. This document was produced by AIA software at 10:20:31 ET on 10/11/2019 under Order No.1831144354 which expires on 03/12/2020, and is not for resale.
User Notes: (927742022)

$4,000,000.00 Construction Budget

§ 1.1.4 The Owner's anticipated design and construction milestone dates: See Exhibit G

.1 Design phase milestone dates, if any:

To be Determined

.2 Construction commencement date:

To be Determined

.3 Substantial Completion date or dates:

To be Determined

.4 Other milestone dates:

To be Determined

§ 1.1.5 The Owner intends the following procurement and delivery method for the Project:
(Identify method such as competitive bid or negotiated contract, as well as any requirements for accelerated or fast-track design and construction, multiple bid packages, or phased construction.)

Design / Bid / Build

§ 1.1.6 The Owner's anticipated Sustainable Objective for the Project:
(Identify and describe the Owner's Sustainable Objective for the Project, if any.)

NA

§ 1.1.6.1 If the Owner identifies a Sustainable Objective, the Owner and Architect shall complete and incorporate AIA Document E204™–2017, Sustainable Projects Exhibit, into this Agreement to define the terms, conditions and services related to the Owner's Sustainable Objective. If E204–2017 is incorporated into this agreement, the Owner and Architect shall incorporate the completed E204–2017 into the agreements with the consultants and contractors performing services or Work in any way associated with the Sustainable Objective.

§ 1.1.7 The Owner identifies the following representative in accordance with Section 5.3:
(List name, address, and other contact information.)

Joey D. Jaco
Director of Utilities
1136 Washington Street
Columbia, SC 29201
803-545-3289
joey.jaco@columbiasc.gov

§ 1.1.8 The persons or entities, in addition to the Owner's representative, who are required to review the Architect's submittals to the Owner are as follows:
(List name, address, and other contact information.)

Bob Probst, AIA – City Architect
Utilities and Engineering Department
Construction Management Division
1136 Washington Street, Suite 510

AIA Document B101™ – 2017. Copyright © 1974, 1978, 1987, 1997, 2007 and 2017 by The American Institute of Architects. All rights reserved. WARNING: This AIA® Document is protected by U.S. Copyright Law and International Treaties. Unauthorized reproduction or distribution of this AIA® Document, or any portion of it, may result in severe civil and criminal penalties, and will be prosecuted to the maximum extent possible under the law. This document was produced by AIA software at 10:20:31 ET on 10/11/2019 under Order No.1831144354 which expires on 03/12/2020, and is not for resale.
User Notes: (927742022)

PO Box 147
Columbia, SC 29217
(803) 545-4002
Robert.probst@columbiasc.gov

L. Maxwell Morgan, III, PE
Wastewater Project Manager
Columbia Water
Department of Engineering
PO Box 147
Columbia, SC 29217
(803)376-3058
Leon.morgan@columbiasc.gov

§ 1.1.9 The Owner shall retain the following consultants and contractors:
(List name, legal status, address, and other contact information.)

.1 Geotechnical Engineer:

To be Determined
GMC will provide a narrative, preliminary site plan, boring locations, and specific project needs to the Geotechnical Engineer to ensure that the project received the necessary information.

.2 Civil Engineer:

GMC to provide as part of Basic Services in association with
Flood Plane Mitigation Engineering by:
Chao & Associates
1728 Main Street
Columbia, SC 29201
803-765-1766

.3 Other, if any:
(List any other consultants and contractors retained by the Owner.)

Surveying: Owner provided service; GMC will coordinate with the provider to determine the specific information required for the project.
Third Party Testing: Owner provided service; GMC will provide specific requirements in the Projet Specification Manual as part of the CD Package.

§ 1.1.10 The Architect identifies the following representative in accordance with Section 2.3:
(List name, address, and other contact information.)

Marc Warren, AIA
1219 Wayne Street
Columbia, SC 29201
803-766-1235
marc.warren@gmcnetwork.com

§ 1.1.11 The Architect shall retain the consultants identified in Sections 1.1.11.1 and 1.1.11.2:
(List name, legal status, address, and other contact information.)

§ 1.1.11.1 Consultants retained under Basic Services: Exhibit F

AIA Document B101™ – 2017. Copyright © 1974, 1978, 1987, 1997, 2007 and 2017 by The American Institute of Architects. **All rights reserved. WARNING: This AIA® Document is protected by U.S. Copyright Law and International Treaties. Unauthorized reproduction or distribution of this AIA® Document, or any portion of it, may result in severe civil and criminal penalties, and will be prosecuted to the maximum extent possible under the law.** This document was produced by AIA software at 10:20:31 ET on 10/11/2019 under Order No.1831144354 which expires on 03/12/2020, and is not for resale.
User Notes:
(927742022)

.1 Structural Engineer:

Chao & Associates
1728 Main Street
Columbia, SC 29201
803-765-1766

.2 Mechanical Engineer:

Swygert & Associates
1315 State Street
Cayce, SC 29033
803-791-9300

.3 Electrical Engineer:

Belka Engineering Associates
7 Cluster Court
Suite 201
Columbia, SC 29210
803-731-0650

§ 1.1.11.2 Consultants retained under Supplemental Services:

Landscape Architecture: Rebecca M. Looney & Associates, Inc.
Cost Estimating: Matthiessen Cost Consultants, LC

§ 1.1.12 Other Initial Information on which the Agreement is based:

See Attached Proposal from the Architect (Exhibit A)

§ 1.2 The Owner and Architect may rely on the Initial Information. Both parties, however, recognize that the Initial Information may materially change and, in that event, the Owner and the Architect shall appropriately adjust the Architect's services, schedule for the Architect's services, and the Architect's compensation. The Owner shall adjust the Owner's budget for the Cost of the Work and the Owner's anticipated design and construction milestones, as necessary, to accommodate material changes in the Initial Information.

§ 1.3 The parties shall agree upon protocols governing the transmission and use of Instruments of Service or any other information or documentation in digital form. The parties will use AIA Document E203™–2013, Building Information Modeling and Digital Data Exhibit, to establish the protocols for the development, use, transmission, and exchange of digital data.

§ 1.3.1 Any use of, or reliance on, all or a portion of a building information model without agreement to protocols governing the use of, and reliance on, the information contained in the model and without having those protocols set forth in AIA Document E203™–2013, Building Information Modeling and Digital Data Exhibit, and the requisite AIA Document G202™–2013, Project Building Information Modeling Protocol Form, shall be at the using or relying party's sole risk and without liability to the other party and its contractors or consultants, the authors of, or contributors to, the building information model, and each of their agents and employees.

ARTICLE 2 ARCHITECT'S RESPONSIBILITIES

§ 2.1 The Architect shall provide professional services as set forth in this Agreement. The Architect represents that it is properly licensed in the jurisdiction where the Project is located to provide the services required by this Agreement, or shall cause such services to be performed by appropriately licensed design professionals.

§ 2.2 The Architect shall perform its services consistent with the professional skill and care ordinarily provided by architects practicing in the same or similar locality under the same or similar circumstances. The Architect shall

AIA Document B101™ – 2017. Copyright © 1974, 1978, 1987, 1997, 2007 and 2017 by The American Institute of Architects. **All rights reserved. WARNING: This AIA® Document is protected by U.S. Copyright Law and International Treaties. Unauthorized reproduction or distribution of this AIA® Document, or any portion of it, may result in severe civil and criminal penalties, and will be prosecuted to the maximum extent possible under the law.** This document was produced by AIA software at 10:20:31 ET on 10/11/2019 under Order No.1831144354 which expires on 03/12/2020, and is not for resale.
User Notes: (927742022)

perform its services as expeditiously as is consistent with such professional skill and care and the orderly progress of the Project.

§ 2.3 The Architect shall identify a representative authorized to act on behalf of the Architect with respect to the Project.

§ 2.4 Except with the Owner's knowledge and consent, the Architect shall not engage in any activity, or accept any employment, interest or contribution that would reasonably appear to compromise the Architect's professional judgment with respect to this Project.

§ 2.5 The Architect shall maintain the following insurance until termination of this Agreement. If any of the requirements set forth below are in addition to the types and limits the Architect normally maintains, the Owner shall pay the Architect as set forth in Section 11.9.

§ 2.5.1 Commercial General Liability with policy limits of not less than One Million Dollars ($ 1,000,000.00) for each occurrence and Two Million Dollars ($ 2,000,000.00) in the aggregate for bodily injury and property damage.

§ 2.5.2 Automobile Liability covering vehicles owned, and non-owned vehicles used, by the Architect with policy limits of not less than One Million Dollars ($ 1,000,000.00) per accident for bodily injury, death of any person, and property damage arising out of the ownership, maintenance and use of those motor vehicles, along with any other statutorily required automobile coverage.

§ 2.5.3 The Architect may achieve the required limits and coverage for Commercial General Liability and Automobile Liability through a combination of primary and excess or umbrella liability insurance, provided such primary and excess or umbrella liability insurance policies result in the same or greater coverage as the coverages required under Sections 2.5.1 and 2.5.2, and in no event shall any excess or umbrella liability insurance provide narrower coverage than the primary policy. The excess policy shall not require the exhaustion of the underlying limits only through the actual payment by the underlying insurers.

§ 2.5.4 Workers' Compensation at statutory limits.

§ 2.5.5 Employers' Liability with policy limits not less than One Million Dollars ($ 1,000,000.00) each accident, One Million Dollars ($ 1,000,000.00) each employee, and One Million Dollars ($ 1,000,000.00) policy limit.

§ 2.5.6 Professional Liability covering negligent acts, errors and omissions in the performance of professional services with policy limits of not less than One Million Dollars ($ 1,000,000.00) per claim and Two Million Dollars ($ 2,000,000.00) in the aggregate.

§ 2.5.7 Additional Insured Obligations. To the fullest extent permitted by law, the Architect shall cause the primary and excess or umbrella polices for Commercial General Liability and Automobile Liability to include the Owner as an additional insured for claims caused in whole or in part by the Architect's negligent acts or omissions. The additional insured coverage shall be primary and non-contributory to any of the Owner's insurance policies and shall apply to both ongoing and completed operations.

§ 2.5.8 The Architect shall provide certificates of insurance to the Owner that evidence compliance with the requirements in this Section 2.5.

ARTICLE 3 SCOPE OF ARCHITECT'S BASIC SERVICES (Exhibit A)

§ 3.1 The Architect's Basic Services consist of those described in this Article 3 and include usual and customary structural, mechanical, and electrical engineering services. Services not set forth in this Article 3 are Supplemental or Additional Services.

§ 3.1.1 The Architect shall manage the Architect's services, research applicable design criteria, attend Project meetings, communicate with members of the Project team, and report progress to the Owner.

AIA Document B101™ – 2017. Copyright © 1974, 1978, 1987, 1997, 2007 and 2017 by The American Institute of Architects. All rights reserved. WARNING: This AIA® Document is protected by U.S. Copyright Law and International Treaties. Unauthorized reproduction or distribution of this AIA® Document, or any portion of it, may result in severe civil and criminal penalties, and will be prosecuted to the maximum extent possible under the law. This document was produced by AIA software at 10:20:31 ET on 10/11/2019 under Order No.1831144354 which expires on 03/12/2020, and is not for resale.
User Notes:

§ 3.1.2 The Architect shall coordinate its services with those services provided by the Owner and the Owner's consultants. The Architect shall be entitled to rely on, and shall not be responsible for, the accuracy, completeness, and timeliness of, services and information furnished by the Owner and the Owner's consultants. The Architect shall provide prompt written notice to the Owner if the Architect becomes aware of any error, omission, or inconsistency in such services or information.

§ 3.1.3 As soon as practicable after the date of this Agreement, the Architect shall submit for the Owner's approval a schedule for the performance of the Architect's services. The schedule initially shall include anticipated dates for the commencement of construction and for Substantial Completion of the Work as set forth in the Initial Information. The schedule shall include allowances for periods of time required for the Owner's review, for the performance of the Owner's consultants, and for approval of submissions by authorities having jurisdiction over the Project. Once approved by the Owner, time limits established by the schedule shall not, except for reasonable cause, be exceeded by the Architect or Owner. With the Owner's approval, the Architect shall adjust the schedule, if necessary, as the Project proceeds until the commencement of construction.

§ 3.1.4 The Architect shall not be responsible for an Owner's directive or substitution, or for the Owner's acceptance of non-conforming Work, made or given without the Architect's written approval.

§ 3.1.5 The Architect shall contact governmental authorities required to approve the Construction Documents and entities providing utility services to the Project. The Architect shall respond to applicable design requirements imposed by those authorities and entities.

§ 3.1.6 The Architect shall assist the Owner in connection with the Owner's responsibility for filing documents required for the approval of governmental authorities having jurisdiction over the Project.

§ 3.2 Schematic Design Phase Services

§ 3.2.1 The Architect shall review the program and other information furnished by the Owner, and shall review laws, codes, and regulations applicable to the Architect's services.

§ 3.2.2 The Architect shall prepare a preliminary evaluation of the Owner's program, schedule, budget for the Cost of the Work, Project site, the proposed procurement and delivery method, and other Initial Information, each in terms of the other, to ascertain the requirements of the Project. The Architect shall notify the Owner of (1) any inconsistencies discovered in the information, and (2) other information or consulting services that may be reasonably needed for the Project.

§ 3.2.3 The Architect shall present its preliminary evaluation to the Owner and shall discuss with the Owner alternative approaches to design and construction of the Project. The Architect shall reach an understanding with the Owner regarding the requirements of the Project.

§ 3.2.4 Based on the Project requirements agreed upon with the Owner, the Architect shall prepare and present, for the Owner's approval, a preliminary design illustrating the scale and relationship of the Project components.

§ 3.2.5 Based on the Owner's approval of the preliminary design, the Architect shall prepare Schematic Design Documents for the Owner's approval. The Schematic Design Documents shall consist of drawings and other documents including a site plan, if appropriate, and preliminary building plans, sections and elevations; and may include some combination of study models, perspective sketches, or digital representations. Preliminary selections of major building systems and construction materials shall be noted on the drawings or described in writing.

§ 3.2.5.1 The Architect shall consider sustainable design alternatives, such as material choices and building orientation, together with other considerations based on program and aesthetics, in developing a design that is consistent with the Owner's program, schedule and budget for the Cost of the Work. The Owner may obtain more advanced sustainable design services as a Supplemental Service under Section 4.1.1.

§ 3.2.5.2 The Architect shall consider the value of alternative materials, building systems and equipment, together with other considerations based on program and aesthetics, in developing a design for the Project that is consistent with the Owner's program, schedule, and budget for the Cost of the Work.

AIA Document B101™ – 2017. Copyright © 1974, 1978, 1987, 1997, 2007 and 2017 by The American Institute of Architects. **All rights reserved. WARNING: This AIA® Document is protected by U.S. Copyright Law and International Treaties. Unauthorized reproduction or distribution of this AIA® Document, or any portion of it, may result in severe civil and criminal penalties, and will be prosecuted to the maximum extent possible under the law.** This document was produced by AIA software at 10:20:31 ET on 10/11/2019 under Order No.1831144354 which expires on 03/12/2020, and is not for resale.
User Notes:

§ 3.2.6 The Architect shall submit to the Owner an estimate of the Cost of the Work prepared in accordance with Section 6.3.

§ 3.2.7 The Architect shall submit the Schematic Design Documents to the Owner, and request the Owner's approval.

§ 3.3 Design Development Phase Services

§ 3.3.1 Based on the Owner's approval of the Schematic Design Documents, and on the Owner's authorization of any adjustments in the Project requirements and the budget for the Cost of the Work, the Architect shall prepare Design Development Documents for the Owner's approval. The Design Development Documents shall illustrate and describe the development of the approved Schematic Design Documents and shall consist of drawings and other documents including plans, sections, elevations, typical construction details, and diagrammatic layouts of building systems to fix and describe the size and character of the Project as to architectural, structural, mechanical and electrical systems, and other appropriate elements. The Design Development Documents shall also include outline specifications that identify major materials and systems and establish, in general, their quality levels.

§ 3.3.2 The Architect shall update the estimate of the Cost of the Work prepared in accordance with Section 6.3.

§ 3.3.3 The Architect shall submit the Design Development Documents to the Owner, advise the Owner of any adjustments to the estimate of the Cost of the Work, and request the Owner's approval.

§ 3.4 Construction Documents Phase Services

§ 3.4.1 Based on the Owner's approval of the Design Development Documents, and on the Owner's authorization of any adjustments in the Project requirements and the budget for the Cost of the Work, the Architect shall prepare Construction Documents for the Owner's approval. The Construction Documents shall illustrate and describe the further development of the approved Design Development Documents and shall consist of Drawings and Specifications setting forth in detail the quality levels and performance criteria of materials and systems and other requirements for the construction of the Work. The Owner and Architect acknowledge that, in order to perform the Work, the Contractor will provide additional information, including Shop Drawings, Product Data, Samples and other similar submittals, which the Architect shall review in accordance with Section 3.6.4.

§ 3.4.2 The Architect shall incorporate the design requirements of governmental authorities having jurisdiction over the Project into the Construction Documents.

§ 3.4.3 During the development of the Construction Documents, the Architect shall assist the Owner in the development and preparation of (1) procurement information that describes the time, place, and conditions of bidding, including bidding or proposal forms; (2) the form of agreement between the Owner and Contractor; and (3) the Conditions of the Contract for Construction (General, Supplementary and other Conditions). The Architect shall also compile a project manual that includes the Conditions of the Contract for Construction and Specifications, and may include bidding requirements and sample forms.

§ 3.4.4 The Architect shall update the estimate for the Cost of the Work prepared in accordance with Section 6.3.

§ 3.4.5 The Architect shall submit the Construction Documents to the Owner, advise the Owner of any adjustments to the estimate of the Cost of the Work, take any action required under Section 6.5, and request the Owner's approval.

§ 3.5 Procurement Phase Services

§ 3.5.1 General

The Architect shall assist the Owner in establishing a list of prospective contractors. Following the Owner's approval of the Construction Documents, the Architect shall assist the Owner in (1) obtaining either competitive bids or negotiated proposals; (2) confirming responsiveness of bids or proposals; (3) determining the successful bid or proposal, if any; and, (4) awarding and preparing contracts for construction.

§ 3.5.2 Competitive Bidding

§ 3.5.2.1 Bidding Documents shall consist of bidding requirements and proposed Contract Documents.

AIA Document B101™ – 2017. Copyright © 1974, 1978, 1987, 1997, 2007 and 2017 by The American Institute of Architects. **All rights reserved. WARNING: This AIA® Document is protected by U.S. Copyright Law and International Treaties. Unauthorized reproduction or distribution of this AIA® Document, or any portion of it, may result in severe civil and criminal penalties, and will be prosecuted to the maximum extent possible under the law.** This document was produced by AIA software at 10:20:31 ET on 10/11/2019 under Order No.1831144354 which expires on 03/12/2020, and is not for resale.
User Notes:
(927742022)

§ 3.5.2.2 The Architect shall assist the Owner in bidding the Project by:

.1 facilitating the distribution of Bidding Documents to prospective bidders;

.2 organizing and conducting a pre-bid conference for prospective bidders;

.3 preparing responses to questions from prospective bidders and providing clarifications and interpretations of the Bidding Documents to the prospective bidders in the form of addenda; and,

.4 organizing and conducting the opening of the bids, and subsequently documenting and distributing the bidding results, as directed by the Owner.

§ 3.5.2.3 If the Bidding Documents permit substitutions, upon the Owner's written authorization, the Architect shall, as an Additional Service, consider requests for substitutions and prepare and distribute addenda identifying approved substitutions to all prospective bidders.

§ 3.5.3 Negotiated Proposals

§ 3.5.3.1 Proposal Documents shall consist of proposal requirements and proposed Contract Documents.

§ 3.5.3.2 The Architect shall assist the Owner in obtaining proposals by:

.1 facilitating the distribution of Proposal Documents for distribution to prospective contractors and requesting their return upon completion of the negotiation process;

.2 organizing and participating in selection interviews with prospective contractors;

.3 preparing responses to questions from prospective contractors and providing clarifications and interpretations of the Proposal Documents to the prospective contractors in the form of addenda; and,

.4 participating in negotiations with prospective contractors, and subsequently preparing a summary report of the negotiation results, as directed by the Owner.

§ 3.5.3.3 If the Proposal Documents permit substitutions, upon the Owner's written authorization, the Architect shall, as an Additional Service, consider requests for substitutions and prepare and distribute addenda identifying approved substitutions to all prospective contractors.

§ 3.6 Construction Phase Services

§ 3.6.1 General

§ 3.6.1.1 The Architect shall provide administration of the Contract between the Owner and the Contractor as set forth below and in AIA Document A201™–2017, General Conditions of the Contract for Construction. If the Owner and Contractor modify AIA Document A201–2017, those modifications shall not affect the Architect's services under this Agreement unless the Owner and the Architect amend this Agreement.

§ 3.6.1.2 The Architect shall advise and consult with the Owner during the Construction Phase Services. The Architect shall have authority to act on behalf of the Owner only to the extent provided in this Agreement. The Architect shall not have control over, charge of, or responsibility for the construction means, methods, techniques, sequences or procedures, or for safety precautions and programs in connection with the Work, nor shall the Architect be responsible for the Contractor's failure to perform the Work in accordance with the requirements of the Contract Documents. The Architect shall be responsible for the Architect's negligent acts or omissions, but shall not have control over or charge of, and shall not be responsible for, acts or omissions of the Contractor or of any other persons or entities performing portions of the Work.

§ 3.6.1.3 Subject to Section 4.2 and except as provided in Section 3.6.6.5, the Architect's responsibility to provide Construction Phase Services commences with the award of the Contract for Construction and terminates on the date the Architect issues the final Certificate for Payment.

§ 3.6.2 Evaluations of the Work

§ 3.6.2.1 The Architect shall visit the site at intervals appropriate to the stage of construction, or as otherwise required in Section 4.2.3, to become generally familiar with the progress and quality of the portion of the Work completed, and to determine, in general, if the Work observed is being performed in a manner indicating that the Work, when fully completed, will be in accordance with the Contract Documents. However, the Architect shall not be required to make exhaustive or continuous on-site inspections to check the quality or quantity of the Work. On the basis of the site visits, the Architect shall keep the Owner reasonably informed about the progress and quality of the portion of the Work completed, and promptly report to the Owner (1) known deviations from the Contract Documents, (2) known

AIA Document B101™ – 2017. Copyright © 1974, 1978, 1987, 1997, 2007 and 2017 by The American Institute of Architects. All rights reserved. WARNING: This AIA® Document is protected by U.S. Copyright Law and International Treaties. Unauthorized reproduction or distribution of this AIA® Document, or any portion of it, may result in severe civil and criminal penalties, and will be prosecuted to the maximum extent possible under the law. This document was produced by AIA software at 10:20:31 ET on 10/11/2019 under Order No.1831144354 which expires on 03/12/2020, and is not for resale.
User Notes:

deviations from the most recent construction schedule submitted by the Contractor, and (3) defects and deficiencies observed in the Work.

§ 3.6.2.2 The Architect has the authority to reject Work that does not conform to the Contract Documents. Whenever the Architect considers it necessary or advisable, the Architect shall have the authority to require inspection or testing of the Work in accordance with the provisions of the Contract Documents, whether or not the Work is fabricated, installed or completed. However, neither this authority of the Architect nor a decision made in good faith either to exercise or not to exercise such authority shall give rise to a duty or responsibility of the Architect to the Contractor, Subcontractors, suppliers, their agents or employees, or other persons or entities performing portions of the Work.

§ 3.6.2.3 The Architect shall interpret and decide matters concerning performance under, and requirements of, the Contract Documents on written request of either the Owner or Contractor. The Architect's response to such requests shall be made in writing within any time limits agreed upon or otherwise with reasonable promptness.

§ 3.6.2.4 Interpretations and decisions of the Architect shall be consistent with the intent of, and reasonably inferable from, the Contract Documents and shall be in writing or in the form of drawings. When making such interpretations and decisions, the Architect shall endeavor to secure faithful performance by both Owner and Contractor, shall not show partiality to either, and shall not be liable for results of interpretations or decisions rendered in good faith. The Architect's decisions on matters relating to aesthetic effect shall be final if consistent with the intent expressed in the Contract Documents.

§ 3.6.2.5 Unless the Owner and Contractor designate another person to serve as an Initial Decision Maker, as that term is defined in AIA Document A201–2017, the Architect shall render initial decisions on Claims between the Owner and Contractor as provided in the Contract Documents.

§ 3.6.3 Certificates for Payment to Contractor

§ 3.6.3.1 The Architect shall review and certify the amounts due the Contractor and shall issue certificates in such amounts. The Architect's certification for payment shall constitute a representation to the Owner, based on the Architect's evaluation of the Work as provided in Section 3.6.2 and on the data comprising the Contractor's Application for Payment, that, to the best of the Architect's knowledge, information and belief, the Work has progressed to the point indicated, the quality of the Work is in accordance with the Contract Documents, and that the Contractor is entitled to payment in the amount certified. The foregoing representations are subject to (1) an evaluation of the Work for conformance with the Contract Documents upon Substantial Completion, (2) results of subsequent tests and inspections, (3) correction of minor deviations from the Contract Documents prior to completion, and (4) specific qualifications expressed by the Architect.

§ 3.6.3.2 The issuance of a Certificate for Payment shall not be a representation that the Architect has (1) made exhaustive or continuous on-site inspections to check the quality or quantity of the Work, (2) reviewed construction means, methods, techniques, sequences or procedures, (3) reviewed copies of requisitions received from Subcontractors and suppliers and other data requested by the Owner to substantiate the Contractor's right to payment, or (4) ascertained how or for what purpose the Contractor has used money previously paid on account of the Contract Sum.

§ 3.6.3.3 The Architect shall maintain a record of the Applications and Certificates for Payment.

§ 3.6.4 Submittals

§ 3.6.4.1 The Architect shall review the Contractor's submittal schedule and shall not unreasonably delay or withhold approval of the schedule. The Architect's action in reviewing submittals shall be taken in accordance with the approved submittal schedule or, in the absence of an approved submittal schedule, with reasonable promptness while allowing sufficient time, in the Architect's professional judgment, to permit adequate review.

§ 3.6.4.2 The Architect shall review and approve, or take other appropriate action upon, the Contractor's submittals such as Shop Drawings, Product Data and Samples, but only for the limited purpose of checking for conformance with information given and the design concept expressed in the Contract Documents. Review of such submittals is not for the purpose of determining the accuracy and completeness of other information such as dimensions, quantities, and installation or performance of equipment or systems, which are the Contractor's responsibility. The Architect's review

AIA Document B101™ – 2017. Copyright © 1974, 1978, 1987, 1997, 2007 and 2017 by The American Institute of Architects. **All rights reserved. WARNING: This AIA® Document is protected by U.S. Copyright Law and International Treaties. Unauthorized reproduction or distribution of this AIA® Document, or any portion of it, may result in severe civil and criminal penalties, and will be prosecuted to the maximum extent possible under the law.** This document was produced by AIA software at 10:20:31 ET on 10/11/2019 under Order No.1831144354 which expires on 03/12/2020, and is not for resale.
User Notes:

shall not constitute approval of safety precautions or construction means, methods, techniques, sequences or procedures. The Architect's approval of a specific item shall not indicate approval of an assembly of which the item is a component.

§ 3.6.4.3 If the Contract Documents specifically require the Contractor to provide professional design services or certifications by a design professional related to systems, materials, or equipment, the Architect shall specify the appropriate performance and design criteria that such services must satisfy. The Architect shall review and take appropriate action on Shop Drawings and other submittals related to the Work designed or certified by the Contractor's design professional, provided the submittals bear such professional's seal and signature when submitted to the Architect. The Architect's review shall be for the limited purpose of checking for conformance with information given and the design concept expressed in the Contract Documents. The Architect shall be entitled to rely upon, and shall not be responsible for, the adequacy and accuracy of the services, certifications, and approvals performed or provided by such design professionals.

§ 3.6.4.4 Subject to Section 4.2, the Architect shall review and respond to requests for information about the Contract Documents. The Architect shall set forth, in the Contract Documents, the requirements for requests for information. Requests for information shall include, at a minimum, a detailed written statement that indicates the specific Drawings or Specifications in need of clarification and the nature of the clarification requested. The Architect's response to such requests shall be made in writing within any time limits agreed upon, or otherwise with reasonable promptness. If appropriate, the Architect shall prepare and issue supplemental Drawings and Specifications in response to the requests for information.

§ 3.6.4.5 The Architect shall maintain a record of submittals and copies of submittals supplied by the Contractor in accordance with the requirements of the Contract Documents.

§ 3.6.5 Changes in the Work

§ 3.6.5.1 The Architect may order minor changes in the Work that are consistent with the intent of the Contract Documents and do not involve an adjustment in the Contract Sum or an extension of the Contract Time. Subject to Section 4.2, the Architect shall prepare Change Orders and Construction Change Directives for the Owner's approval and execution in accordance with the Contract Documents.

§ 3.6.5.2 The Architect shall maintain records relative to changes in the Work.

§ 3.6.6 Project Completion

§ 3.6.6.1 The Architect shall:

.1 conduct inspections to determine the date or dates of Substantial Completion and the date of final completion;

.2 issue Certificates of Substantial Completion;

.3 forward to the Owner, for the Owner's review and records, written warranties and related documents required by the Contract Documents and received from the Contractor; and,

.4 issue a final Certificate for Payment based upon a final inspection indicating that, to the best of the Architect's knowledge, information, and belief, the Work complies with the requirements of the Contract Documents.

§ 3.6.6.2 The Architect's inspections shall be conducted with the Owner to check conformance of the Work with the requirements of the Contract Documents and to verify the accuracy and completeness of the list submitted by the Contractor of Work to be completed or corrected.

§ 3.6.6.3 When Substantial Completion has been achieved, the Architect shall inform the Owner about the balance of the Contract Sum remaining to be paid the Contractor, including the amount to be retained from the Contract Sum, if any, for final completion or correction of the Work.

§ 3.6.6.4 The Architect shall forward to the Owner the following information received from the Contractor: (1) consent of surety or sureties, if any, to reduction in or partial release of retainage or the making of final payment; (2) affidavits, receipts, releases and waivers of liens, or bonds indemnifying the Owner against liens; and (3) any other documentation required of the Contractor under the Contract Documents.

AIA Document B101™ – 2017. Copyright © 1974, 1978, 1987, 1997, 2007 and 2017 by The American Institute of Architects. **All rights reserved. WARNING: This AIA® Document is protected by U.S. Copyright Law and International Treaties. Unauthorized reproduction or distribution of this AIA® Document, or any portion of it, may result in severe civil and criminal penalties, and will be prosecuted to the maximum extent possible under the law.** This document was produced by AIA software at 10:20:31 ET on 10/11/2019 under Order No.1831144354 which expires on 03/12/2020, and is not for resale.
User Notes:

§ 3.6.6.5 Upon request of the Owner, and prior to the expiration of one year from the date of Substantial Completion, the Architect shall, without additional compensation, conduct a meeting with the Owner to review the facility operations and performance.

ARTICLE 4 SUPPLEMENTAL AND ADDITIONAL SERVICES

§ 4.1 SUPPLEMENTAL OR ADDITIONAL SERVICES

– The City may require supplemental or additional services of the Engineer or recommended by the Engineer and approved by the City in writing.The Engineer must obtain written approval from the City for any supplemental or additional services prior to the work being performed. If the Engineer fails to obtain prior written approval to perform the work, the City is under no obligation to compensate the Engineer for services performed.

Supplemental Services	Responsibility *(Architect, Owner, or not provided)*
§ 4.1.1.1 Programming	Architect – Basic Services
§ 4.1.1.2 Multiple preliminary designs	Architect – Basic Services
§ 4.1.1.3 Measured drawings	NA
§ 4.1.1.4 Existing facilities surveys	NA
§ 4.1.1.5 Site evaluation and planning	Architect – Basic Services
§ 4.1.1.6 Building Information Model management responsibilities	NA
§ 4.1.1.7 Development of Building Information Models for post construction use	NA
§ 4.1.1.8 Civil engineering	Architect – Basic Services
§ 4.1.1.9 Landscape design	Architect – Basic Services
§ 4.1.1.10 Architectural interior design	Architect – Basic Services
§ 4.1.1.11 Value analysis	NA
§ 4.1.1.12 Detailed cost estimating beyond that required in Section 6.3	Architect – Basic Services – estimates provided at SD, DD and CD phases
§ 4.1.1.13 On-site project representation	Architect-Basic Services, see number of site visits in Section 4.2.3
§ 4.1.1.14 Conformed documents for construction	NA
§ 4.1.1.15 As-designed record drawings	NA
§ 4.1.1.16 As-constructed record drawings	NA
§ 4.1.1.17 Post-occupancy evaluation	NA
§ 4.1.1.18 Facility support services	NA
§ 4.1.1.19 Tenant-related services	NA
§ 4.1.1.20 Architect's coordination of the Owner's consultants	NA
§ 4.1.1.21 Telecommunications/data design	Owner / Architect to coordinate with the Owner's Vendor and provide infrastructure design raceways, boxes and conduit for the systems.
§ 4.1.1.22 Security evaluation and planning	Owner / Architect to coordinate with the Owner's Vendor and provide infrastructure design raceways, boxes and conduit for the systems.
§ 4.1.1.23 Commissioning	NA
§ 4.1.1.24 Sustainable Project Services pursuant to Section 4.1.3	NA

AIA Document B101™ – 2017. Copyright © 1974, 1978, 1987, 1997, 2007 and 2017 by The American Institute of Architects. All rights reserved. WARNING: This AIA® Document is protected by U.S. Copyright Law and International Treaties. Unauthorized reproduction or distribution of this AIA® Document, or any portion of it, may result in severe civil and criminal penalties, and will be prosecuted to the maximum extent possible under the law. This document was produced by AIA software at 10:20:31 ET on 10/11/2019 under Order No.1831144354 which expires on 03/12/2020, and is not for resale.
User Notes:
(927742022)

Supplemental Services	Responsibility (Architect, Owner, or not provided)
§ 4.1.1.25 Fast-track design services	NA
§ 4.1.1.26 Multiple bid packages	NA
§ 4.1.1.27 Historic preservation	NA
§ 4.1.1.28 Furniture, furnishings, and equipment design	Owner / Architect to coordinate with the Owner's Vendor and provide infrastructure for owner provided furnishings and equipment.
§ 4.1.1.29 Other services provided by specialty Consultants	Re-Zoning Process – Architect - Basic Services
§ 4.1.1.30 Other Supplemental Services	
§ 4.1.1.31 Flood Plane Mitigation	Architect – Basic Services

(Table deleted)
(Paragraphs deleted)

§ 4.1.2 Description of Supplemental Services

§ 4.1.2.1 A description of each Supplemental Service identified in Section 4.1.1 as the Architect's responsibility is provided below.

(Describe in detail the Architect's Supplemental Services identified in Section 4.1.1 or, if set forth in an exhibit, identify the exhibit. The AIA publishes a number of Standard Form of Architect's Services documents that can be included as an exhibit to describe the Architect's Supplemental Services.)

All Services are provided as part of the Basic Services fee as outlined above and in the attached Fee Proposal (Exhibit D)

§ 4.1.2.2 A description of each Supplemental Service identified in Section 4.1.1 as the Owner's responsibility is provided below.

(Describe in detail the Owner's Supplemental Services identified in Section 4.1.1 or, if set forth in an exhibit, identify the exhibit.)

NA

§ 4.1.3 If the Owner identified a Sustainable Objective in Article 1, the Architect shall provide, as a Supplemental Service, the Sustainability Services required in AIA Document E204™–2017, Sustainable Projects Exhibit, attached to this Agreement. The Owner shall compensate the Architect as provided in Section 11.2.

§ 4.2 Architect's Additional Services

The Architect may provide Additional Services after execution of this Agreement without invalidating the Agreement. Except for services required due to the fault of the Architect, any Additional Services provided in accordance with this Section 4.2 shall entitle the Architect to compensation pursuant to Section 11.3 and an appropriate adjustment in the Architect's schedule.

§ 4.2.1 Upon recognizing the need to perform the following Additional Services, the Architect shall notify the Owner with reasonable promptness and explain the facts and circumstances giving rise to the need. The Architect shall not proceed to provide the following Additional Services until the Architect receives the Owner's written authorization:

.1 Services necessitated by a change in the Initial Information, previous instructions or approvals given by the Owner, or a material change in the Project including size, quality, complexity, the Owner's schedule or budget for Cost of the Work, or procurement or delivery method;

.2 Services necessitated by the enactment or revision of codes, laws, or regulations, including changing or editing previously prepared Instruments of Service;

.3 Changing or editing previously prepared Instruments of Service necessitated by official interpretations of applicable codes, laws or regulations that are either (a) contrary to specific interpretations by the applicable authorities having jurisdiction made prior to the issuance of the building permit, or (b) contrary to requirements of the Instruments of Service when those Instruments of Service were prepared in accordance with the applicable standard of care;

AIA Document B101™ – 2017. Copyright © 1974, 1978, 1987, 1997, 2007 and 2017 by The American Institute of Architects. All rights reserved. WARNING: This AIA® Document is protected by U.S. Copyright Law and International Treaties. Unauthorized reproduction or distribution of this AIA® Document, or any portion of it, may result in severe civil and criminal penalties, and will be prosecuted to the maximum extent possible under the law. This document was produced by AIA software at 10:20:31 ET on 10/11/2019 under Order No.1831144354 which expires on 03/12/2020, and is not for resale.
User Notes: (927742022)

.4 Services necessitated by decisions of the Owner not rendered in a timely manner or any other failure of performance on the part of the Owner or the Owner's consultants or contractors;
.5 Preparing digital models or other design documentation for transmission to the Owner's consultants and contractors, or to other Owner-authorized recipients;
.6 Preparation of design and documentation for alternate bid or proposal requests proposed by the Owner;
.7 Preparation for, and attendance at, a public presentation, meeting or hearing;
.8 Preparation for, and attendance at, a dispute resolution proceeding or legal proceeding, except where the Architect is party thereto;
.9 Evaluation of the qualifications of entities providing bids or proposals;
.10 Consultation concerning replacement of Work resulting from fire or other cause during construction; or,
.11 Assistance to the Initial Decision Maker, if other than the Architect.

§ 4.2.2 To avoid delay in the Construction Phase, the Architect shall provide the following Additional Services, notify the Owner with reasonable promptness, and explain the facts and circumstances giving rise to the need. If, upon receipt of the Architect's notice, the Owner determines that all or parts of the services are not required, the Owner shall give prompt written notice to the Architect of the Owner's determination. The Owner shall compensate the Architect for the services provided prior to the Architect's receipt of the Owner's notice.

.1 Reviewing a Contractor's submittal out of sequence from the submittal schedule approved by the Architect;
.2 Responding to the Contractor's requests for information that are not prepared in accordance with the Contract Documents or where such information is available to the Contractor from a careful study and comparison of the Contract Documents, field conditions, other Owner-provided information, Contractor-prepared coordination drawings, or prior Project correspondence or documentation;
.3 Preparing Change Orders and Construction Change Directives that require evaluation of Contractor's proposals and supporting data, or the preparation or revision of Instruments of Service;
.4 Evaluating an extensive number of Claims as the Initial Decision Maker; or,
.5 Evaluating substitutions proposed by the Owner or Contractor and making subsequent revisions to Instruments of Service resulting therefrom.

§ 4.2.3 The Architect shall provide Construction Phase Services exceeding the limits set forth below as Additional Services. When the limits below are reached, the Architect shall notify the Owner:

.1 Two (2) reviews of each Shop Drawing, Product Data item, sample and similar submittals of the Contractor
.2 Twenty-Two (22) visits to the site by the Architect during construction
.3 One (1) inspections for any portion of the Work to determine whether such portion of the Work is substantially complete in accordance with the requirements of the Contract Documents
.4 One (1) inspections for any portion of the Work to determine final completion.

§ 4.2.4 Except for services required under Section 3.6.6.5 and those services that do not exceed the limits set forth in Section 4.2.3, Construction Phase Services provided more than 60 days after (1) the date of Substantial Completion of the Work or (2) the initial date of Substantial Completion identified in the agreement between the Owner and Contractor, whichever is earlier, shall be compensated as Additional Services to the extent the Architect incurs additional cost in providing those Construction Phase Services.

§ 4.2.5 If the services covered by this Agreement have not been completed within Eighteen (18) months of a Notice to Proceed, through no fault of the Architect, extension of the Architect's services beyond that time shall be compensated as Additional Services, Which will be the current Labor Rates in Qualification Response.

ARTICLE 5 OWNER'S RESPONSIBILITIES

§ 5.1 Unless otherwise provided for under this Agreement, the Owner shall provide information in a timely manner regarding requirements for and limitations on the Project, including a written program, which shall set forth the Owner's objectives; schedule; constraints and criteria, including space requirements and relationships; flexibility; expandability; special equipment; systems; and site requirements.

AIA Document B101™ – 2017. Copyright © 1974, 1978, 1987, 1997, 2007 and 2017 by The American Institute of Architects. All rights reserved. WARNING: This AIA® Document is protected by U.S. Copyright Law and International Treaties. Unauthorized reproduction or distribution of this AIA® Document, or any portion of it, may result in severe civil and criminal penalties, and will be prosecuted to the maximum extent possible under the law. This document was produced by AIA software at 10:20:31 ET on 10/11/2019 under Order No.1831144354 which expires on 03/12/2020, and is not for resale.
User Notes:
(927742022)

§ 5.2 The Owner shall establish the Owner's budget for the Project, including (1) the budget for the Cost of the Work as defined in Section 6.1; (2) the Owner's other costs; and, (3) reasonable contingencies related to all of these costs. The Owner shall update the Owner's budget for the Project as necessary throughout the duration of the Project until final completion. If the Owner significantly increases or decreases the Owner's budget for the Cost of the Work, the Owner shall notify the Architect. The Owner and the Architect shall thereafter agree to a corresponding change in the Project's scope and quality.

§ 5.3 The Owner shall identify a representative authorized to act on the Owner's behalf with respect to the Project. The Owner shall render decisions and approve the Architect's submittals in a timely manner in order to avoid unreasonable delay in the orderly and sequential progress of the Architect's services.

§ 5.4 The Owner shall furnish surveys to describe physical characteristics, legal limitations and utility locations for the site of the Project, and a written legal description of the site. The surveys and legal information shall include, as applicable, grades and lines of streets, alleys, pavements and adjoining property and structures; designated wetlands; adjacent drainage; rights-of-way, restrictions, easements, encroachments, zoning, deed restrictions, boundaries and contours of the site; locations, dimensions, and other necessary data with respect to existing buildings, other improvements and trees; and information concerning available utility services and lines, both public and private, above and below grade, including inverts and depths. All the information on the survey shall be referenced to a Project benchmark.

§ 5.5 The Owner shall furnish services of geotechnical engineers, which may include test borings, test pits, determinations of soil bearing values, percolation tests, evaluations of hazardous materials, seismic evaluation, ground corrosion tests and resistivity tests, including necessary operations for anticipating subsoil conditions, with written reports and appropriate recommendations.

§ 5.6 The Owner shall provide the Supplemental Services designated as the Owner's responsibility in Section 4.1.1.

§ 5.7 If the Owner identified a Sustainable Objective in Article 1, the Owner shall fulfill its responsibilities as required in AIA Document E204™–2017, Sustainable Projects Exhibit, attached to this Agreement.

§ 5.8 The Owner shall coordinate the services of its own consultants with those services provided by the Architect. Upon the Architect's request, the Owner shall furnish copies of the scope of services in the contracts between the Owner and the Owner's consultants. The Owner shall furnish the services of consultants other than those designated as the responsibility of the Architect in this Agreement, or authorize the Architect to furnish them as an Additional Service, when the Architect requests such services and demonstrates that they are reasonably required by the scope of the Project. The Owner shall require that its consultants and contractors maintain insurance, including professional liability insurance, as appropriate to the services or work provided.

§ 5.9 The Owner shall furnish tests, inspections and reports required by law or the Contract Documents, such as structural, mechanical, and chemical tests, tests for air and water pollution, and tests for hazardous materials.

§ 5.10 The Owner shall furnish all legal, insurance and accounting services, including auditing services, that may be reasonably necessary at any time for the Project to meet the Owner's needs and interests.

§ 5.11 The Owner shall provide prompt written notice to the Architect if the Owner becomes aware of any fault or defect in the Project, including errors, omissions or inconsistencies in the Architect's Instruments of Service.

§ 5.12 The Owner shall include the Architect in all communications with the Contractor that relate to or affect the Architect's services or professional responsibilities. The Owner shall promptly notify the Architect of the substance of any direct communications between the Owner and the Contractor otherwise relating to the Project. Communications by and with the Architect's consultants shall be through the Architect.

§ 5.13 Before executing the Contract for Construction, the Owner shall coordinate the Architect's duties and responsibilities set forth in the Contract for Construction with the Architect's services set forth in this Agreement. The Owner shall provide the Architect a copy of the executed agreement between the Owner and Contractor, including the General Conditions of the Contract for Construction.

AIA Document B101™ – 2017. Copyright © 1974, 1978, 1987, 1997, 2007 and 2017 by The American Institute of Architects. **All rights reserved. WARNING: This AIA® Document is protected by U.S. Copyright Law and International Treaties. Unauthorized reproduction or distribution of this AIA® Document, or any portion of it, may result in severe civil and criminal penalties, and will be prosecuted to the maximum extent possible under the law.** This document was produced by AIA software at 10:20:31 ET on 10/11/2019 under Order No.1831144354 which expires on 03/12/2020, and is not for resale.
User Notes:

§ 5.14 The Owner shall provide the Architect access to the Project site prior to commencement of the Work and shall obligate the Contractor to provide the Architect access to the Work wherever it is in preparation or progress.

§ 5.15 Within 15 days after receipt of a written request from the Architect, the Owner shall furnish the requested information as necessary and relevant for the Architect to evaluate, give notice of, or enforce lien rights.

ARTICLE 6 COST OF THE WORK

§ 6.1 For purposes of this Agreement, the Cost of the Work shall be the total cost to the Owner to construct all elements of the Project designed or specified by the Architect and shall include contractors' general conditions costs, overhead and profit. The Cost of the Work also includes the reasonable value of labor, materials, and equipment, donated to, or otherwise furnished by, the Owner. The Cost of the Work does not include the compensation of the Architect; the costs of the land, rights-of-way, financing, or contingencies for changes in the Work; or other costs that are the responsibility of the Owner.

§ 6.2 The Owner's budget for the Cost of the Work is provided in Initial Information, and shall be adjusted throughout the Project as required under Sections 5.2, 6.4 and 6.5. Evaluations of the Owner's budget for the Cost of the Work, and the preliminary estimate of the Cost of the Work and updated estimates of the Cost of the Work, prepared by the Architect, represent the Architect's judgment as a design professional. It is recognized, however, that neither the Architect nor the Owner has control over the cost of labor, materials, or equipment; the Contractor's methods of determining bid prices; or competitive bidding, market, or negotiating conditions. Accordingly, the Architect cannot and does not warrant or represent that bids or negotiated prices will not vary from the Owner's budget for the Cost of the Work, or from any estimate of the Cost of the Work, or evaluation, prepared or agreed to by the Architect.

§ 6.3 In preparing estimates of the Cost of Work, the Architect shall be permitted to include contingencies for design, bidding, and price escalation; to determine what materials, equipment, component systems, and types of construction are to be included in the Contract Documents; to recommend reasonable adjustments in the program and scope of the Project; and to include design alternates as may be necessary to adjust the estimated Cost of the Work to meet the Owner's budget. The Architect's estimate of the Cost of the Work shall be based on current area, volume or similar conceptual estimating techniques. If the Owner requires a detailed estimate of the Cost of the Work, the Architect shall provide such an estimate, if identified as the Architect's responsibility in Section 4.1.1, as a Supplemental Service.

§ 6.4 If, through no fault of the Architect, the Procurement Phase has not commenced within 90 days after the Architect submits the Construction Documents to the Owner, the Owner's budget for the Cost of the Work shall be adjusted to reflect changes in the general level of prices in the applicable construction market.

§ 6.5 If at any time the Architect's estimate of the Cost of the Work exceeds the Owner's budget for the Cost of the Work, the Architect shall make appropriate recommendations to the Owner to adjust the Project's size, quality, or budget for the Cost of the Work, and the Owner shall cooperate with the Architect in making such adjustments.

§ 6.6 If the Owner's budget for the Cost of the Work at the conclusion of the Construction Documents Phase Services is exceeded by the lowest bona fide bid or negotiated proposal, the Owner shall

.1 give written approval of an increase in the budget for the Cost of the Work;
.2 authorize rebidding or renegotiating of the Project within a reasonable time;
.3 terminate in accordance with Section 9.5;
.4 in consultation with the Architect, revise the Project program, scope, or quality as required to reduce the Cost of the Work; or,
.5 implement any other mutually acceptable alternative.

§ 6.7 If the Owner chooses to proceed under Section 6.6.4, the Architect shall modify the Construction Documents as necessary to comply with the Owner's budget for the Cost of the Work at the conclusion of the Construction Documents Phase Services, or the budget as adjusted under Section 6.6.1. If the Owner requires the Architect to modify the Construction Documents because the lowest bona fide bid or negotiated proposal exceeds the Owner's budget for the Cost of the Work due to market conditions the Architect could not reasonably anticipate, the Owner shall compensate the Architect for the modifications as an Additional Service pursuant to Section 11.3; otherwise the Architect's services for modifying the Construction Documents shall be without additional compensation. In any

AIA Document B101™ – 2017. Copyright © 1974, 1978, 1987, 1997, 2007 and 2017 by The American Institute of Architects. All rights reserved. WARNING: This AIA® Document is protected by U.S. Copyright Law and International Treaties. Unauthorized reproduction or distribution of this AIA® Document, or any portion of it, may result in severe civil and criminal penalties, and will be prosecuted to the maximum extent possible under the law. This document was produced by AIA software at 10:20:31 ET on 10/11/2019 under Order No.1831144354 which expires on 03/12/2020, and is not for resale.
User Notes:
(927742022)

event, the Architect's modification of the Construction Documents shall be the limit of the Architect's responsibility under this Article 6.

ARTICLE 7 COPYRIGHTS AND LICENSES

§ 7.1 The Architect and the Owner warrant that in transmitting Instruments of Service, or any other information, the transmitting party is the copyright owner of such information or has permission from the copyright owner to transmit such information for its use on the Project.

§ 7.2 The Architect and the Architect's consultants shall be deemed the authors and owners of their respective Instruments of Service, including the Drawings and Specifications, and shall retain all common law, statutory and other reserved rights, including copyrights. Submission or distribution of Instruments of Service to meet official regulatory requirements or for similar purposes in connection with the Project is not to be construed as publication in derogation of the reserved rights of the Architect and the Architect's consultants.

§ 7.3 The Architect grants to the Owner a nonexclusive license to use the Architect's Instruments of Service solely and exclusively for purposes of constructing, using, maintaining, altering and adding to the Project, provided that the Owner substantially performs its obligations under this Agreement, including prompt payment of all sums due pursuant to Article 9 and Article 11. The Architect shall obtain similar nonexclusive licenses from the Architect's consultants consistent with this Agreement. The license granted under this section permits the Owner to authorize the Contractor, Subcontractors, Sub-subcontractors, and suppliers, as well as the Owner's consultants and separate contractors, to reproduce applicable portions of the Instruments of Service, subject to any protocols established pursuant to Section 1.3, solely and exclusively for use in performing services or construction for the Project. If the Architect rightfully terminates this Agreement for cause as provided in Section 9.4, the license granted in this Section 7.3 shall terminate.

(Paragraph deleted)

§ 7.4 Except for the licenses granted in this Article 7, no other license or right shall be deemed granted or implied under this Agreement. The Owner shall not assign, delegate, sublicense, pledge or otherwise transfer any license granted herein to another party without the prior written agreement of the Architect. Any unauthorized use of the Instruments of Service shall be at the Owner's sole risk and without liability to the Architect and the Architect's consultants.

§ 7.5 Except as otherwise stated in Section 7.3, the provisions of this Article 7 shall survive the termination of this Agreement.

ARTICLE 8 CLAIMS AND DISPUTES

§ 8.1 General

§ 8.1.1 The Owner and Architect shall commence all claims and causes of action against the other and arising out of or related to this Agreement, whether in contract, tort, or otherwise, in accordance with the requirements of the binding dispute resolution method selected in this Agreement and within the period specified by applicable law, but in any case not more than 10 years after the date of Substantial Completion of the Work. The Owner and Architect waive all claims and causes of action not commenced in accordance with this Section 8.1.1.

§ 8.1.2 To the extent damages are covered by property insurance, the Owner and Architect waive all rights against each other and against the contractors, consultants, agents, and employees of the other for damages, except such rights as they may have to the proceeds of such insurance as set forth in AIA Document A201–2017, General Conditions of the Contract for Construction. The Owner or the Architect, as appropriate, shall require of the contractors, consultants, agents, and employees of any of them, similar waivers in favor of the other parties enumerated herein.

§ 8.1.3 The Architect and Owner waive consequential damages for claims, disputes, or other matters in question, arising out of or relating to this Agreement. This mutual waiver is applicable, without limitation, to all consequential damages due to either party's termination of this Agreement, except as specifically provided in Section 9.7.

§ 8.2 Dispute Resolution

§ 8.2.1 If the parties do not resolve a dispute, the method of binding dispute resolution shall be the following:
(Check the appropriate box.)

Init.
/
AIA Document B101™ – 2017. Copyright © 1974, 1978, 1987, 1997, 2007 and 2017 by The American Institute of Architects. All rights reserved. WARNING: This AIA® Document is protected by U.S. Copyright Law and International Treaties. Unauthorized reproduction or distribution of this AIA® Document, or any portion of it, may result in severe civil and criminal penalties, and will be prosecuted to the maximum extent possible under the law. This document was produced by AIA software at 10:20:31 ET on 10/11/2019 under Order No.1831144354 which expires on 03/12/2020, and is not for resale.
User Notes:
(927742022)

[ ] Arbitration pursuant to Section 8.3 of this Agreement

[X] Litigation in a court of competent jurisdiction with both parties expressly waiving their right to a trial by jury.

[ ] Other: *(Specify)*

If the Owner and Architect do not select a method of binding dispute resolution, or do not subsequently agree in writing to a binding dispute resolution method other than litigation, the dispute will be resolved in a court of competent jurisdiction.

(Paragraphs deleted)

§ 8.3 Arbitration

§ 8.3.1 If the parties have selected arbitration as the method for binding dispute resolution in this Agreement, any claim, dispute or other matter in question arising out of or related to this Agreement subject to, but not resolved by, mediation shall be subject to arbitration, which, unless the parties mutually agree otherwise, shall be administered by the American Arbitration Association in accordance with its Construction Industry Arbitration Rules in effect on the date of this Agreement. A demand for arbitration shall be made in writing, delivered to the other party to this Agreement, and filed with the person or entity administering the arbitration.

§ 8.3.1.1 A demand for arbitration shall be made no earlier than concurrently with the filing of a request for mediation, but in no event shall it be made after the date when the institution of legal or equitable proceedings based on the claim, dispute or other matter in question would be barred by the applicable statute of limitations. For statute of limitations purposes, receipt of a written demand for arbitration by the person or entity administering the arbitration shall constitute the institution of legal or equitable proceedings based on the claim, dispute or other matter in question.

§ 8.3.2 The foregoing agreement to arbitrate, and other agreements to arbitrate with an additional person or entity duly consented to by parties to this Agreement, shall be specifically enforceable in accordance with applicable law in any court having jurisdiction thereof.

§ 8.3.3 The award rendered by the arbitrator(s) shall be final, and judgment may be entered upon it in accordance with applicable law in any court having jurisdiction thereof.

§ 8.3.4 Consolidation or Joinder

§ 8.3.4.1 Either party, at its sole discretion, may consolidate an arbitration conducted under this Agreement with any other arbitration to which it is a party provided that (1) the arbitration agreement governing the other arbitration permits consolidation; (2) the arbitrations to be consolidated substantially involve common questions of law or fact; and (3) the arbitrations employ materially similar procedural rules and methods for selecting arbitrator(s).

§ 8.3.4.2 Either party, at its sole discretion, may include by joinder persons or entities substantially involved in a common question of law or fact whose presence is required if complete relief is to be accorded in arbitration, provided that the party sought to be joined consents in writing to such joinder. Consent to arbitration involving an additional person or entity shall not constitute consent to arbitration of any claim, dispute or other matter in question not described in the written consent.

§ 8.3.4.3 The Owner and Architect grant to any person or entity made a party to an arbitration conducted under this Section 8.3, whether by joinder or consolidation, the same rights of joinder and consolidation as the Owner and Architect under this Agreement.

§ 8.4 The provisions of this Article 8 shall survive the termination of this Agreement.

ARTICLE 9 TERMINATION OR SUSPENSION

§ 9.1 If the Owner fails to make payments to the Architect in accordance with this Agreement, such failure shall be considered substantial nonperformance and cause for termination or, at the Architect's option, cause for suspension of

AIA Document B101™ – 2017. Copyright © 1974, 1978, 1987, 1997, 2007 and 2017 by The American Institute of Architects. All rights reserved. WARNING: This AIA® Document is protected by U.S. Copyright Law and International Treaties. Unauthorized reproduction or distribution of this AIA® Document, or any portion of it, may result in severe civil and criminal penalties, and will be prosecuted to the maximum extent possible under the law. This document was produced by AIA software at 10:20:31 ET on 10/11/2019 under Order No.1831144354 which expires on 03/12/2020, and is not for resale.
User Notes:

performance of services under this Agreement. If the Architect elects to suspend services, the Architect shall give seven days' written notice to the Owner before suspending services. In the event of a suspension of services, the Architect shall have no liability to the Owner for delay or damage caused the Owner because of such suspension of services. Before resuming services, the Owner shall pay the Architect all sums due prior to suspension. The Architect's fees for the remaining services and the time schedules shall be equitably adjusted.

§ 9.2 If the Owner suspends the Project, the Architect shall be compensated for services performed prior to notice of such suspension. The Architect's fees for the remaining services and the time schedules shall be equitably adjusted.

§ 9.3 If the Owner suspends the Project for more than 90 cumulative days for reasons other than the fault of the Architect, the Architect may terminate this Agreement by giving not less than seven days' written notice.

§ 9.4 Either party may terminate this Agreement upon not less than seven days' written notice should the other party fail substantially to perform in accordance with the terms of this Agreement through no fault of the party initiating the termination.

§ 9.5 The Owner may terminate this Agreement upon not less than seven days' written notice to the Architect for the Owner's convenience and without cause.

§ 9.6 If the Owner terminates this Agreement for its convenience pursuant to Section 9.5, or the Architect terminates this Agreement pursuant to Section 9.3, the Owner shall compensate the Architect for services performed and Reimbursable Expenses incurred prior to termination.

§ 9.7 In addition to any amounts paid under Section 9.6, if the Owner terminates this Agreement for its convenience pursuant to Section 9.5, or the Architect terminates this Agreement pursuant to Section 9.3, the Owner shall pay to the Architect the following fees:
(Set forth below the amount of any termination or licensing fee, or the method for determining any termination or licensing fee.)

.1 Termination Fee:

Up to the level of completed work with no additional Termination Fee

§ 9.8 Except as otherwise expressly provided herein, this Agreement shall terminate one year from the date of Substantial Completion.

§ 9.9 The Owner's rights to use the Architect's Instruments of Service in the event of a termination of this Agreement are set forth in Article 7 and Section 9.7.

ARTICLE 10 MISCELLANEOUS PROVISIONS

(Paragraph deleted)
§ 10.2 Terms in this Agreement shall have the same meaning as those in AIA Document A201–2017, General Conditions of the Contract for Construction.

§ 10.3 The Owner and Architect, respectively, bind themselves, their agents, successors, assigns, and legal representatives to this Agreement. Neither the Owner nor the Architect shall assign this Agreement without the written consent of the other, except that the Owner may assign this Agreement to a lender providing financing for the Project if the lender agrees to assume the Owner's rights and obligations under this Agreement, including any payments due to the Architect by the Owner prior to the assignment.

§ 10.4 If the Owner requests the Architect to execute certificates, the proposed language of such certificates shall be submitted to the Architect for review at least 14 days prior to the requested dates of execution. If the Owner requests the Architect to execute consents reasonably required to facilitate assignment to a lender, the Architect shall execute all such consents that are consistent with this Agreement, provided the proposed consent is submitted to the Architect

AIA Document B101™ – 2017. Copyright © 1974, 1978, 1987, 1997, 2007 and 2017 by The American Institute of Architects. All rights reserved. WARNING: This AIA® Document is protected by U.S. Copyright Law and International Treaties. Unauthorized reproduction or distribution of this AIA® Document, or any portion of it, may result in severe civil and criminal penalties, and will be prosecuted to the maximum extent possible under the law. This document was produced by AIA software at 10:20:31 ET on 10/11/2019 under Order No.1831144354 which expires on 03/12/2020, and is not for resale.
User Notes:

for review at least 14 days prior to execution. The Architect shall not be required to execute certificates or consents that would require knowledge, services, or responsibilities beyond the scope of this Agreement.

§ 10.5 Nothing contained in this Agreement shall create a contractual relationship with, or a cause of action in favor of, a third party against either the Owner or Architect.

§ 10.6 Unless otherwise required in this Agreement, the Architect shall have no responsibility for the discovery, presence, handling, removal or disposal of, or exposure of persons to, hazardous materials or toxic substances in any form at the Project site.

§ 10.7 The Architect shall have the right to include photographic or artistic representations of the design of the Project among the Architect's promotional and professional materials. The Architect shall be given reasonable access to the completed Project to make such representations. However, the Architect's materials shall not include the Owner's confidential or proprietary information if the Owner has previously advised the Architect in writing of the specific information considered by the Owner to be confidential or proprietary. The Owner shall provide professional credit for the Architect in the Owner's promotional materials for the Project. This Section 10.7 shall survive the termination of this Agreement unless the Owner terminates this Agreement for cause pursuant to Section 9.4.

§ 10.8 If the Architect or Owner receives information specifically designated as "confidential" or "business proprietary," the receiving party shall keep such information strictly confidential and shall not disclose it to any other person except as set forth in Section 10.8.1. This Section 10.8 shall survive the termination of this Agreement.

§ 10.8.1 The receiving party may disclose "confidential" or "business proprietary" information after 7 days' notice to the other party, when required by law, arbitrator's order, or court order, including a subpoena or other form of compulsory legal process issued by a court or governmental entity, or to the extent such information is reasonably necessary for the receiving party to defend itself in any dispute. The receiving party may also disclose such information to its employees, consultants, or contractors in order to perform services or work solely and exclusively for the Project, provided those employees, consultants and contractors are subject to the restrictions on the disclosure and use of such information as set forth in this Section 10.8.

§ 10.9 The invalidity of any provision of the Agreement shall not invalidate the Agreement or its remaining provisions. If it is determined that any provision of the Agreement violates any law, or is otherwise invalid or unenforceable, then that provision shall be revised to the extent necessary to make that provision legal and enforceable. In such case the Agreement shall be construed, to the fullest extent permitted by law, to give effect to the parties' intentions and purposes in executing the Agreement.

ARTICLE 11 COMPENSATION (Exhibit B)

§ 11.1 For the Architect's Basic Services described under Article 3, the Owner shall compensate the Architect as follows:

.1 Stipulated Sum
(Insert amount)

Three Hundred Thirty Thousand Dollars ($330,000.00)

.2 Percentage Basis
(Insert percentage value)

NA (NA) % of the Owner's budget for the Cost of the Work, as calculated in accordance with Section 11.6.

.3 Other
(Describe the method of compensation)

NA

AIA Document B101™ – 2017. Copyright © 1974, 1978, 1987, 1997, 2007 and 2017 by The American Institute of Architects. All rights reserved. WARNING: This AIA® Document is protected by U.S. Copyright Law and International Treaties. Unauthorized reproduction or distribution of this AIA® Document, or any portion of it, may result in severe civil and criminal penalties, and will be prosecuted to the maximum extent possible under the law. This document was produced by AIA software at 10:20:31 ET on 10/11/2019 under Order No.1831144354 which expires on 03/12/2020, and is not for resale.
User Notes: (927742022)

§ 11.2 For the Architect's Supplemental Services designated in Section 4.1.1 and for any Sustainability Services required pursuant to Section 4.1.3, the Owner shall compensate the Architect as follows:
(Insert amount of, or basis for, compensation. If necessary, list specific services to which particular methods of compensation apply.)

All Supplemental Services are included in the Stipulated Sum noted Above

§ 11.3 For Additional Services that may arise during the course of the Project, including those under Section 4.2, the Owner shall compensate the Architect as follows:
(Insert amount of, or basis for, compensation.)

Compensation shall be based upon mutually agreed upon Fee Proposal or hourly rate as noted in the attached hourly rate table.

§ 11.4 Compensation for Supplemental and Additional Services of the Architect's consultants when not included in Section 11.2 or 11.3, shall be the amount invoiced to the Architect plus Ten percent (10 %), or as follows:
(Insert amount of, or basis for computing, Architect's consultants' compensation for Supplemental or Additional Services.)

Compensation shall be based upon mutually agreed upon Fee Proposal plus 10%

§ 11.5 When compensation for Basic Services is based on a stipulated sum or a percentage basis, the proportion of compensation for each phase of services shall be as follows:

Schematic Design Phase	Fifteen	percent (	15	%)
Design Development Phase	Twenty	percent (	20	%)
Construction Documents Phase	Thirty-Five	percent (	35	%)
Procurement Phase	Five	percent (	5	%)
Construction Phase	Twenty-Five	percent (	25	%)
Total Basic Compensation	one hundred	percent (	100	%)

§ 11.6 When compensation identified in Section 11.1 is on a percentage basis, progress payments for each phase of Basic Services shall be calculated by multiplying the percentages identified in this Article by the Owner's most recent budget for the Cost of the Work. Compensation paid in previous progress payments shall not be adjusted based on subsequent updates to the Owner's budget for the Cost of the Work.

§ 11.6.1 When compensation is on a percentage basis and any portions of the Project are deleted or otherwise not constructed, compensation for those portions of the Project shall be payable to the extent services are performed on those portions. The Architect shall be entitled to compensation in accordance with this Agreement for all services performed whether or not the Construction Phase is commenced.

§ 11.7 The hourly billing rates for services of the Architect and the Architect's consultants are set forth below. The rates shall be adjusted in accordance with the Architect's and Architect's consultants' normal review practices.
(If applicable, attach an exhibit of hourly billing rates or insert them below.)

See Attached Exhibit D –GMC Hourly Labor Rates

§ 11.8 Compensation for Reimbursable Expenses

§ 11.8.1 Reimbursable Expenses are in addition to compensation for Basic, Supplemental, and Additional Services and include expenses incurred by the Architect and the Architect's consultants directly related to the Project, as follows:

.1 Transportation and authorized out-of-town travel and subsistence;

Init. /

AIA Document B101™ – 2017. Copyright © 1974, 1978, 1987, 1997, 2007 and 2017 by The American Institute of Architects. All rights reserved. WARNING: This AIA® Document is protected by U.S. Copyright Law and International Treaties. Unauthorized reproduction or distribution of this AIA® Document, or any portion of it, may result in severe civil and criminal penalties, and will be prosecuted to the maximum extent possible under the law. This document was produced by AIA software at 10:20:31 ET on 10/11/2019 under Order No.1831144354 which expires on 03/12/2020, and is not for resale.
User Notes: (927742022)

.2 Long distance services, dedicated data and communication services, teleconferences, Project web sites, and extranets;
.3 Permitting and other fees required by authorities having jurisdiction over the Project;
.4 Printing, reproductions, plots, and standard form documents;
.5 Postage, handling, and delivery;
.6 Expense of overtime work requiring higher than regular rates, if authorized in advance by the Owner;
.7 Renderings, physical models, mock-ups, professional photography, and presentation materials requested by the Owner or required for the Project;
.8 If required by the Owner, and with the Owner's prior written approval, the Architect's consultants' expenses of professional liability insurance dedicated exclusively to this Project, or the expense of additional insurance coverage or limits in excess of that normally maintained by the Architect's consultants;
.9 All taxes levied on professional services and on reimbursable expenses;
.10 Site office expenses;
.11 Registration fees and any other fees charged by the Certifying Authority or by other entities as necessary to achieve the Sustainable Objective; and,
.12 Other similar Project-related expenditures.

§ 11.8.2 For Reimbursable Expenses the compensation shall be the expenses incurred by the Architect and the Architect's consultants plus Ten percent (10 %) of the expenses incurred.

.1 Reimbursable expenses are estimated at $15,500.00. The Architect shall notify the Owner prior to reaching the anticipated expense limit. Reimbursable Expenses include the cost for review fees by various agencies such as DHEC, SCDOT, City of Cayce, Richland and/or Lexington County, and FEMA. Receipts and Back-up for all reimbursable expenses shall be provided with each invoice.

§ 11.9 Architect's Insurance. If the types and limits of coverage required in Section 2.5 are in addition to the types and limits the Architect normally maintains, the Owner shall pay the Architect for the additional costs incurred by the Architect for the additional coverages as set forth below:
(Insert the additional coverages the Architect is required to obtain in order to satisfy the requirements set forth in Section 2.5, and for which the Owner shall reimburse the Architect.)

NA

§ 11.10 Payments to the Architect
§ 11.10.1 Initial Payments
§ 11.10.1.1 An initial payment of Zero ($ 0.00) shall be made upon execution of this Agreement and is the minimum payment under this Agreement. It shall be credited to the Owner's account in the final invoice.

§ 11.10.1.2 If a Sustainability Certification is part of the Sustainable Objective, an initial payment to the Architect of Zero ($ 0.00) shall be made upon execution of this Agreement for registration fees and other fees payable to the Certifying Authority and necessary to achieve the Sustainability Certification. The Architect's payments to the Certifying Authority shall be credited to the Owner's account at the time the expense is incurred.

§ 11.10.2 Progress Payments
§ 11.10.2.1 Unless otherwise agreed, payments for services shall be made monthly in proportion to services performed. Payments are due and payable upon presentation of the Architect's invoice. Amounts unpaid Forty-Five (45) days after the invoice date shall bear interest at the rate entered below, or in the absence thereof at the legal rate prevailing from time to time at the principal place of business of the Architect.
(Insert rate of monthly or annual interest agreed upon.)

Two and a half percent % 2.5

§ 11.10.2.2 The Owner shall not withhold amounts from the Architect's compensation to impose a penalty or liquidated damages on the Architect, or to offset sums requested by or paid to contractors for the cost of changes in the Work, unless the Architect agrees or has been found liable for the amounts in a binding dispute resolution proceeding.

Init. /
AIA Document B101™ – 2017. Copyright © 1974, 1978, 1987, 1997, 2007 and 2017 by The American Institute of Architects. All rights reserved. WARNING: This AIA® Document is protected by U.S. Copyright Law and International Treaties. Unauthorized reproduction or distribution of this AIA® Document, or any portion of it, may result in severe civil and criminal penalties, and will be prosecuted to the maximum extent possible under the law. This document was produced by AIA software at 10:20:31 ET on 10/11/2019 under Order No.1831144354 which expires on 03/12/2020, and is not for resale.
User Notes: (927742022)

§ 11.10.2.3 Records of Reimbursable Expenses, expenses pertaining to Supplemental and Additional Services, and services performed on the basis of hourly rates shall be available to the Owner at mutually convenient times.

ARTICLE 12 SPECIAL TERMS AND CONDITIONS

Special terms and conditions that modify this Agreement are as follows:
(Include other terms and conditions applicable to this Agreement.)

12.1 This project also includes a large covered storage shed for City equipment with proper egress to allow for tractor trailer access located within the plant site beside the Equalization (EQ) basin and a new Guard House and perimeter fencing to secure the site.

12.2 The design team includes coordination with the Owners Vendor for IT /AV and Security. The scope of services to be included in the Construction Documents includes all conduit, raceways, junction boxes and cable tray for IT, AV, and security infrastructure to the building. All wiring, cabling, systems and hardware shall be by the owner.

12.3 The Architect shall distribute plans and specifications for bidding electronically (not printed) and the Architect shall keep a log of plan holders during the bidding process. Drawings and Specifications will be placed in local plans rooms for review by the bidders. The Architect will keep the Owner apprised of all potential bidders and plan holders for the project.

12.4 Every RFQ 013-18-19-JAG exhibit, schedule and appendix attached to this Agreement and referred to herein is hereby incorporated into this Agreement by reference unless this Agreement expressly provides otherwise. This Agreement, exhibits and other documents include, but are not limited to the Conflict of Interest Statement, Non-collusion Affidavit, Business Information Record for Subcontractors/Subcontractors, Local Business Enterprise, and Columbia Disadvantaged Business Enterprise (CDBE) forms are incorporated by reference in this Agreement and set forth the entire understanding between the parties hereto regarding the subject matter thereof.

ARTICLE 13 SCOPE OF THE AGREEMENT

§ 13.1 This Agreement represents the entire and integrated agreement between the Owner and the Architect and supersedes all prior negotiations, representations or agreements, either written or oral. This Agreement may be amended only by written instrument signed by both the Owner and Architect.

§ 13.2 This Agreement is comprised of the following documents identified below:

.1 AIA Document B101™–2017, Standard Form Agreement Between Owner and Architect

.2 AIA Document E203™–2013, Building Information Modeling and Digital Data Exhibit, dated as indicated below:
(Insert the date of the E203-2013 incorporated into this agreement.)

NA

.3 Exhibits:
(Check the appropriate box for any exhibits incorporated into this Agreement.)

[NA] AIA Document E204™–2017, Sustainable Projects Exhibit, dated as indicated below:
(Insert the date of the E204-2017 incorporated into this agreement.)

[NA] Other Exhibits incorporated into this Agreement:
(Clearly identify any other exhibits incorporated into this Agreement, including any exhibits and scopes of services identified as exhibits in Section 4.1.2.)

.4 Other documents:
(List other documents, if any, forming part of the Agreement.)

AIA Document B101™ – 2017. Copyright © 1974, 1978, 1987, 1997, 2007 and 2017 by The American Institute of Architects. **All rights reserved. WARNING: This AIA® Document is protected by U.S. Copyright Law and International Treaties. Unauthorized reproduction or distribution of this AIA® Document, or any portion of it, may result in severe civil and criminal penalties, and will be prosecuted to the maximum extent possible under the law.** This document was produced by AIA software at 10:20:31 ET on 10/11/2019 under Order No.1831144354 which expires on 03/12/2020, and is not for resale.
User Notes:

a. Exhibit A-GMC Proposal Letter Dated Revised July 12, 2019 (Statement of Work)
b. Exhibit B-Compensation
c. Exhibit C-Invoicing Procedures
d. Exhibit D-Hourly Labor Rates (Appendix VI of RFQ)
e. Exhibit E-Prompt Payment Affidavit
f. Exhibit F-Sub Engineering Consultant/Subcontractor Business Information
g. Exhibit G-Proposed Schedule
h. Exhibit H-Location Map

This Agreement entered into as of the day and year first written above.

OWNER *(Signature)*

Teresa Wilson, City Manager
(Printed name and title)
Date:

OWNER *(Signature)*

Joseph D. Jaco, P.E., Director of Utility Operations
(Printed name and title)
Date 10.24.2019

OWNER *(Signature)*

Clint Shealy, P.E., Asst. City Manager Columbia Water
(Printed name and title)
Date 10/24/19

OWNER *(Signature)*

Sandra Wright, CPPB, Purchasing Agent / Director of Procurement and Contracts
(Printed name and title)
Date 10/25/19

ARCHITECT *(Signature)*

Marc Warren, AIA - Vice President / Sr. Architect
(Printed name, title, and license number, if required)
Date 10/15/2019

APPROVED AS TO FORM

Legal Department City of Columbia, SC

Init.
/
AIA Document B101™ – 2017. Copyright © 1974, 1978, 1987, 1997, 2007 and 2017 by The American Institute of Architects. All rights reserved. WARNING: This AIA® Document is protected by U.S. Copyright Law and International Treaties. Unauthorized reproduction or distribution of this AIA® Document, or any portion of it, may result in severe civil and criminal penalties, and will be prosecuted to the maximum extent possible under the law. This document was produced by AIA software at 10:20:31 ET on 10/11/2019 under Order No.1831144354 which expires on 03/12/2020, and is not for resale.
User Notes:
(927742022)

Additions and Deletions Report for
AIA® Document B101™ – 2017

This Additions and Deletions Report, as defined on page 1 of the associated document, reproduces below all text the author has added to the standard form AIA document in order to complete it, as well as any text the author may have added to or deleted from the original AIA text. Added text is shown underlined. Deleted text is indicated with a horizontal line through the original AIA text.

Note: This Additions and Deletions Report is provided for information purposes only and is not incorporated into or constitute any part of the associated AIA document. This Additions and Deletions Report and its associated document were generated simultaneously by AIA software at 10:20:31 ET on 10/11/2019.

PAGE 1

AGREEMENT ~~made as of the day of in the year~~ is entered into as of the date of the last signature affixed hereto.
~~*(In words, indicate day, month and year.)*~~

(Name, legal status, address and other information)

City of Columbia-Purchasing Agent
Office of Procurement and Contracts
1800 Main St, Second Floor
Columbia, SC 29201
(803) 545-3470
procurement@columbiasc.gov

...

Goodwyn Mills & Cawood, Inc. (GMC)
1219 Wayne Street
Columbia, SC 29201

...

SS7382 Wastewater Compliance and Lift Station Maintenance Building
S/S Simmon Tree Lane
Parcel #R11000-01-11, located at the corner of Simmon Tree Lane and Metro Lane
GMC Project No. ACOL190007
City of Columbia Procurement Method: RFQ013-18-19-JAG

PAGE 2

Upon written notification by the City to proceed, the Engineer shall provide the scope of services more fully described in Exhibit A. attached hereto. The Engineer shall perform any and all incidental services not specifically set forth in Exhibit A, which are necessary tofully complete the scope of services described in Exhibit A .

...

A new 7,600 SF Wastewater Compliance and Lift Station Maintenance Facility with an attached 5,000 SF workshop/warehouse located across from the existing MWWT Administration/Laboratory Building located at 1200 Simmon Tree Lane, Columbia, SC 29201. This project also includes a large covered storage shed for City equipment with proper egress to allow for tractor trailer access located within the plant site beside the Equalization (EQ) basin and a new Guard House and perimeter fencing to secure the site.

PAGE 3

Additions and Deletions Report for AIA Document B101™ – 2017. Copyright © 1974, 1978, 1987, 1997, 2007 and 2017 by The American Institute of Architects. **All rights reserved. WARNING: This AIA® Document is protected by U.S. Copyright Law and International Treaties. Unauthorized reproduction or distribution of this AIA® Document, or any portion of it, may result in severe civil and criminal penalties, and will be prosecuted to the maximum extent possible under the law.** This document was produced by AIA software at 10:20:31 ET on 10/11/2019 under Order No.1831144354 which expires on 03/12/2020, and is not for resale.
User Notes:

$4,000,000.00 Construction Budget

§ 1.1.4 The Owner's anticipated design and construction milestone dates: See Exhibit G

...

To be Determined

...

To be Determined

...

To be Determined

...

To be Determined

...

Design / Bid / Build

...

NA

...

Joey D. Jaco
Director of Utilities
1136 Washington Street
Columbia, SC 29201
803-545-3289
joey.jaco@columbiasc.gov

...

Bob Probst, AIA – City Architect
Utilities and Engineering Department
Construction Management Division
1136 Washington Street, Suite 510
PO Box 147
Columbia, SC 29217
(803) 545-4002
Robert.probst@columbiasc.gov

L. Maxwell Morgan, III, PE
Wastewater Project Manager
Columbia Water
Department of Engineering
PO Box 147
Columbia, SC 29217
(803)376-3058
Leon.morgan@columbiasc.gov

Additions and Deletions Report for AIA Document B101™ – 2017. Copyright © 1974, 1978, 1987, 1997, 2007 and 2017 by The American Institute of Architects. **All rights reserved. WARNING: This AIA® Document is protected by U.S. Copyright Law and International Treaties. Unauthorized reproduction or distribution of this AIA® Document, or any portion of it, may result in severe civil and criminal penalties, and will be prosecuted to the maximum extent possible under the law.** This document was produced by AIA software at 10:20:31 ET on 10/11/2019 under Order No.1831144354 which expires on 03/12/2020, and is not for resale.
User Notes:

PAGE 4

To be Determined
GMC will provide a narrative, preliminary site plan, boring locations, and specific project needs to the Geotechnical Engineer to ensure that the project received the necessary information.

...

GMC to provide as part of Basic Services in association with
Flood Plane Mitigation Engineering by:
Chao & Associates
1728 Main Street
Columbia, SC 29201
803-765-1766

...

Surveying: Owner provided service; GMC will coordinate with the provider to determine the specific information required for the project.
Third Party Testing: Owner provided service; GMC will provide specific requirements in the Projet Specification Manual as part of the CD Package.

...

Marc Warren, AIA
1219 Wayne Street
Columbia, SC 29201
803-766-1235
marc.warren@gmcnetwork.com

...

§ 1.1.11.1 Consultants retained under Basic Services: Exhibit F

PAGE 5

Chao & Associates
1728 Main Street
Columbia, SC 29201
803-765-1766

...

Swygert & Associates
1315 State Street
Cayce, SC 29033
803-791-9300

...

Belka Engineering Associates
7 Cluster Court
Suite 201
Columbia, SC 29210
803-731-0650

...

Additions and Deletions Report for AIA Document B101™ – 2017. Copyright © 1974, 1978, 1987, 1997, 2007 and 2017 by The American Institute of Architects. **All rights reserved. WARNING: This AIA® Document is protected by U.S. Copyright Law and International Treaties. Unauthorized reproduction or distribution of this AIA® Document, or any portion of it, may result in severe civil and criminal penalties, and will be prosecuted to the maximum extent possible under the law.** This document was produced by AIA software at 10:20:31 ET on 10/11/2019 under Order No.1831144354 which expires on 03/12/2020, and is not for resale.
User Notes:

Landscape Architecture: Rebecca M. Looney & Associates, Inc.
Cost Estimating: Matthiessen Cost Consultants, LC

...

See Attached Proposal from the Architect (Exhibit A)
PAGE 6

§ 2.5.1 Commercial General Liability with policy limits of not less than One Million Dollars ($ 1,000,000.00) for each occurrence and Two Million Dollars ($ 2,000,000.00) in the aggregate for bodily injury and property damage.

§ 2.5.2 Automobile Liability covering vehicles owned, and non-owned vehicles used, by the Architect with policy limits of not less than One Million Dollars ($ 1,000,000.00) per accident for bodily injury, death of any person, and property damage arising out of the ownership, maintenance and use of those motor vehicles, along with any other statutorily required automobile coverage.

...

§ 2.5.5 Employers' Liability with policy limits not less than One Million Dollars ($ 1,000,000.00) each accident, One Million Dollars ($ 1,000,000.00) each employee, and One Million Dollars ($ 1,000,000.00) policy limit.

§ 2.5.6 Professional Liability covering negligent acts, errors and omissions in the performance of professional services with policy limits of not less than One Million Dollars ($ 1,000,000.00) per claim and Two Million Dollars ($ 2,000,000.00) in the aggregate.

...

ARTICLE 3 SCOPE OF ARCHITECT'S BASIC SERVICES (Exhibit A)
PAGE 12

§ 4.1 ~~Supplemental Services~~SUPPLEMENTAL OR ADDITIONAL SERVICES
– The City may require supplemental or additional services of the Engineer or recommended by the Engineer and approved by the City in writing.The Engineer must obtain written approval from the City for any supplemental or additional services prior to the work being performed. If the Engineer fails to obtain prior written approval to perform the work, the City is under no obligation to compensate the Engineer for services performed.

Supplemental Services	Responsibility *(Architect, Owner, or not provided)*
§ 4.1.1.1 Programming	Architect – Basic Services
§ 4.1.1.2 Multiple preliminary designs	Architect – Basic Services
§ 4.1.1.3 Measured drawings	NA
§ 4.1.1.4 Existing facilities surveys	NA
§ 4.1.1.5 Site evaluation and planning	Architect – Basic Services
§ 4.1.1.6 Building Information Model management responsibilities	NA
§ 4.1.1.7 Development of Building Information Models for post construction use	NA
§ 4.1.1.8 Civil engineering	Architect – Basic Services
§ 4.1.1.9 Landscape design	Architect – Basic Services
§ 4.1.1.10 Architectural interior design	Architect – Basic Services
§ 4.1.1.11 Value analysis	NA

Additions and Deletions Report for AIA Document B101™ – 2017. Copyright © 1974, 1978, 1987, 1997, 2007 and 2017 by The American Institute of Architects. **All rights reserved. WARNING: This AIA® Document is protected by U.S. Copyright Law and International Treaties. Unauthorized reproduction or distribution of this AIA® Document, or any portion of it, may result in severe civil and criminal penalties, and will be prosecuted to the maximum extent possible under the law.** This document was produced by AIA software at 10:20:31 ET on 10/11/2019 under Order No.1831144354 which expires on 03/12/2020, and is not for resale.
User Notes:

Supplemental Services	Responsibility (Architect, Owner, or not provided)
§ 4.1.1.12 Detailed cost estimating beyond that required in Section 6.3	Architect – Basic Services – estimates provided at SD, DD and CD phases
§ 4.1.1.13 On-site project representation	Architect-Basic Services, see number of site visits in Section 4.2.3
§ 4.1.1.14 Conformed documents for construction	NA
§ 4.1.1.15 As-designed record drawings	NA
§ 4.1.1.16 As-constructed record drawings	NA
§ 4.1.1.17 Post-occupancy evaluation	NA
§ 4.1.1.18 Facility support services	NA
§ 4.1.1.19 Tenant-related services	NA
§ 4.1.1.20 Architect's coordination of the Owner's consultants	NA
§ 4.1.1.21 Telecommunications/data design	Owner / Architect to coordinate with the Owner's Vendor and provide infrastructure design raceways, boxes and conduit for the systems.
§ 4.1.1.22 Security evaluation and planning	Owner / Architect to coordinate with the Owner's Vendor and provide infrastructure design raceways, boxes and conduit for the systems.
§ 4.1.1.23 Commissioning	NA
§ 4.1.1.24 Sustainable Project Services pursuant to Section 4.1.3	NA
§ 4.1.1.25 Fast-track design services	NA
§ 4.1.1.26 Multiple bid packages	NA
§ 4.1.1.27 Historic preservation	NA
§ 4.1.1.28 Furniture, furnishings, and equipment design	Owner / Architect to coordinate with the Owner's Vendor and provide infrastructure for owner provided furnishings and equipment.
§ 4.1.1.29 Other services provided by specialty Consultants	Re-Zoning Process – Architect - Basic Services
§ 4.1.1.30 Other Supplemental Services	
§ 4.1.1.31 Flood Plane Mitigation	Architect – Basic Services

~~§ 4.1.1 The services listed below are not included in Basic Services but may be required for the Project. The Architect shall provide the listed Supplemental Services only if specifically designated in the table below as the Architect's responsibility, and the Owner shall compensate the Architect as provided in Section 11.2. Unless otherwise specifically addressed in this Agreement, if neither the Owner nor the Architect is designated, the parties agree that the listed Supplemental Service is not being provided for the Project.~~
~~*(Designate the Architect's Supplemental Services and the Owner's Supplemental Services required for the Project by indicating whether the Architect or Owner shall be responsible for providing the identified Supplemental Service. Insert a description of the Supplemental Services in Section 4.1.2 below or attach the description of services as an exhibit to this Agreement.)*~~

~~Supplemental Services~~	~~Responsibility (Architect, Owner, or not provided)~~
~~§ 4.1.1.1 Programming~~	
~~§ 4.1.1.2 Multiple preliminary designs~~	
~~§ 4.1.1.3 Measured drawings~~	
~~§ 4.1.1.4 Existing facilities surveys~~	
~~§ 4.1.1.5 Site evaluation and planning~~	

Additions and Deletions Report for AIA Document B101™ – 2017. Copyright © 1974, 1978, 1987, 1997, 2007 and 2017 by The American Institute of Architects. **All rights reserved. WARNING: This AIA® Document is protected by U.S. Copyright Law and International Treaties. Unauthorized reproduction or distribution of this AIA® Document, or any portion of it, may result in severe civil and criminal penalties, and will be prosecuted to the maximum extent possible under the law.** This document was produced by AIA software at 10:20:31 ET on 10/11/2019 under Order No.1831144354 which expires on 03/12/2020, and is not for resale.
User Notes:

~~Supplemental Services~~	~~Responsibility~~ *(Architect, Owner, or not provided)*
~~§ 4.1.1.6 Building Information Model management responsibilities~~	
~~§ 4.1.1.7 Development of Building Information Models for post construction use~~	
~~§ 4.1.1.8 Civil engineering~~	
~~§ 4.1.1.9 Landscape design~~	
~~§ 4.1.1.10 Architectural interior design~~	
~~§ 4.1.1.11 Value analysis~~	
~~§ 4.1.1.12 Detailed cost estimating beyond that required in Section 6.3~~	
~~§ 4.1.1.13 On-site project representation~~	
~~§ 4.1.1.14 Conformed documents for construction~~	
~~§ 4.1.1.15 As-designed record drawings~~	
~~§ 4.1.1.16 As-constructed record drawings~~	
~~§ 4.1.1.17 Post-occupancy evaluation~~	
~~§ 4.1.1.18 Facility support services~~	
~~§ 4.1.1.19 Tenant-related services~~	
~~§ 4.1.1.20 Architect's coordination of the Owner's consultants~~	
~~§ 4.1.1.21 Telecommunications/data design~~	
~~§ 4.1.1.22 Security evaluation and planning~~	
~~§ 4.1.1.23 Commissioning~~	
~~§ 4.1.1.24 Sustainable Project Services pursuant to Section 4.1.3~~	
~~§ 4.1.1.25 Fast-track design services~~	
~~§ 4.1.1.26 Multiple bid packages~~	
~~§ 4.1.1.27 Historic preservation~~	
~~§ 4.1.1.28 Furniture, furnishings, and equipment design~~	
~~§ 4.1.1.29 Other services provided by specialty Consultants~~	
~~§ 4.1.1.30 Other Supplemental Services~~	

PAGE 13

All Services are provided as part of the Basic Services fee as outlined above and in the attached Fee Proposal (Exhibit D)

...

NA

PAGE 14

.1 Two (2) reviews of each Shop Drawing, Product Data item, sample and similar submittals of the Contractor

.2 Twenty-Two (22) visits to the site by the Architect during construction

.3 One (1) inspections for any portion of the Work to determine whether such portion of the Work is substantially complete in accordance with the requirements of the Contract Documents

.4 One (1) inspections for any portion of the Work to determine final completion.

Additions and Deletions Report for AIA Document B101™ – 2017. Copyright © 1974, 1978, 1987, 1997, 2007 and 2017 by The American Institute of Architects. **All rights reserved. WARNING: This AIA® Document is protected by U.S. Copyright Law and International Treaties. Unauthorized reproduction or distribution of this AIA® Document, or any portion of it, may result in severe civil and criminal penalties, and will be prosecuted to the maximum extent possible under the law.** This document was produced by AIA software at 10:20:31 ET on 10/11/2019 under Order No.1831144354 which expires on 03/12/2020, and is not for resale.
User Notes:

...

§ 4.2.5 If the services covered by this Agreement have not been completed within Eighteen (18) months of ~~the date of this Agreement,~~ a Notice to Proceed, through no fault of the Architect, extension of the Architect's services beyond that time shall be compensated as Additional ~~Services.~~Services, Which will be the current Labor Rates in Qualification Response.
PAGE 17

~~§ 7.3.1 In the event the Owner uses the Instruments of Service without retaining the authors of the Instruments of Service, the Owner releases the Architect and Architect's consultant(s) from all claims and causes of action arising from such uses. The Owner, to the extent permitted by law, further agrees to indemnify and hold harmless the Architect and its consultants from all costs and expenses, including the cost of defense, related to claims and causes of action asserted by any third person or entity to the extent such costs and expenses arise from the Owner's use of the Instruments of Service under this Section 7.3.1. The terms of this Section 7.3.1 shall not apply if the Owner rightfully terminates this Agreement for cause under Section 9.4.~~

...

§ 8.2 ~~Mediation~~Dispute Resolution
§ 8.2.1 ~~Any claim, dispute or other matter in question arising out of or related to this Agreement shall be subject to mediation as a condition precedent to binding dispute resolution. If such matter relates to or is the subject of a lien arising out of the Architect's services, the Architect may proceed in accordance with applicable law to comply with the lien notice or filing deadlines prior to resolution of the matter by mediation or by binding dispute resolution.~~If the parties do not resolve a dispute, the method of binding dispute resolution shall be the following:
(Check the appropriate box.)

[ ] Arbitration pursuant to Section 8.3 of this Agreement

[X] Litigation in a court of competent jurisdiction with both parties expressly waiving their right to a trial by jury.

[ ] Other: *(Specify)*

If the Owner and Architect do not select a method of binding dispute resolution, or do not subsequently agree in writing to a binding dispute resolution method other than litigation, the dispute will be resolved in a court of competent jurisdiction.

~~§ 8.2.2 The Owner and Architect shall endeavor to resolve claims, disputes and other matters in question between them by mediation, which, unless the parties mutually agree otherwise, shall be administered by the American Arbitration Association in accordance with its Construction Industry Mediation Procedures in effect on the date of this Agreement. A request for mediation shall be made in writing, delivered to the other party to this Agreement, and filed with the person or entity administering the mediation. The request may be made concurrently with the filing of a complaint or other appropriate demand for binding dispute resolution but, in such event, mediation shall proceed in advance of binding dispute resolution proceedings, which shall be stayed pending mediation for a period of 60 days from the date of filing, unless stayed for a longer period by agreement of the parties or court order. If an arbitration proceeding is stayed pursuant to this section, the parties may nonetheless proceed to the selection of the arbitrator(s) and agree upon a schedule for later proceedings.~~

~~§ 8.2.3 The parties shall share the mediator's fee and any filing fees equally. The mediation shall be held in the place where the Project is located, unless another location is mutually agreed upon. Agreements reached in mediation shall be enforceable as settlement agreements in any court having jurisdiction thereof.~~

~~§ 8.2.4 If the parties do not resolve a dispute through mediation pursuant to this Section 8.2, the method of binding dispute resolution shall be the following:~~

Additions and Deletions Report for AIA Document B101™ – 2017. Copyright © 1974, 1978, 1987, 1997, 2007 and 2017 by The American Institute of Architects. **All rights reserved. WARNING: This AIA® Document is protected by U.S. Copyright Law and International Treaties. Unauthorized reproduction or distribution of this AIA® Document, or any portion of it, may result in severe civil and criminal penalties, and will be prosecuted to the maximum extent possible under the law.** This document was produced by AIA software at 10:20:31 ET on 10/11/2019 under Order No.1831144354 which expires on 03/12/2020, and is not for resale.
User Notes:

~~*(Check the appropriate box.)*~~

~~[ ] Arbitration pursuant to Section 8.3 of this Agreement~~

~~[ ] Litigation in a court of competent jurisdiction~~

~~[ ] Other: *(Specify)*~~

~~If the Owner and Architect do not select a method of binding dispute resolution, or do not subsequently agree in writing to a binding dispute resolution method other than litigation, the dispute will be resolved in a court of competent jurisdiction.~~

PAGE 18

§ 9.1 If the Owner fails to make payments to the Architect in accordance with this Agreement, such failure shall be considered substantial nonperformance and cause for termination or, at the Architect's option, cause for suspension of performance of services under this Agreement. If the Architect elects to suspend services, the Architect shall give seven days' written notice to the Owner before suspending services. In the event of a suspension of services, the Architect shall have no liability to the Owner for delay or damage caused the Owner because of such suspension of services. Before resuming services, the Owner shall pay the Architect all sums due prior to ~~suspension and any expenses incurred in the interruption and resumption of the Architect's services.~~ suspension. The Architect's fees for the remaining services and the time schedules shall be equitably adjusted.

§ 9.2 If the Owner suspends the Project, the Architect shall be compensated for services performed prior to notice of such suspension. ~~When the Project is resumed, the Architect shall be compensated for expenses incurred in the interruption and resumption of the Architect's services.~~ The Architect's fees for the remaining services and the time schedules shall be equitably adjusted.

PAGE 19

§ 9.6 If the Owner terminates this Agreement for its convenience pursuant to Section 9.5, or the Architect terminates this Agreement pursuant to Section 9.3, the Owner shall compensate the Architect for services performed ~~prior to termination, Reimbursable Expenses incurred, and costs attributable to termination, including the costs attributable to the Architect's termination of consultant agreements.~~ and Reimbursable Expenses incurred prior to termination.

...

~~.2~~ ~~Licensing Fee if the Owner intends to continue using the Architect's Instruments of Service:~~ Up to the level of completed work with no additional Termination Fee

...

~~**§ 10.1** This Agreement shall be governed by the law of the place where the Project is located, excluding that jurisdiction's choice of law rules. If the parties have selected arbitration as the method of binding dispute resolution, the Federal Arbitration Act shall govern Section 8.3.~~

PAGE 20

ARTICLE 11 COMPENSATION (Exhibit B)

...

Additions and Deletions Report for AIA Document B101™ – 2017. Copyright © 1974, 1978, 1987, 1997, 2007 and 2017 by The American Institute of Architects. **All rights reserved. WARNING: This AIA® Document is protected by U.S. Copyright Law and International Treaties. Unauthorized reproduction or distribution of this AIA® Document, or any portion of it, may result in severe civil and criminal penalties, and will be prosecuted to the maximum extent possible under the law.** This document was produced by AIA software at 10:20:31 ET on 10/11/2019 under Order No.1831144354 which expires on 03/12/2020, and is not for resale.
User Notes:

Three Hundred Thirty Thousand Dollars ($330,000.00)

...

NA (NA) % of the Owner's budget for the Cost of the Work, as calculated in accordance with Section 11.6.

...

NA

PAGE 21

All Supplemental Services are included in the Stipulated Sum noted Above

...

Compensation shall be based upon mutually agreed upon Fee Proposal or hourly rate as noted in the attached hourly rate table.

§ 11.4 Compensation for Supplemental and Additional Services of the Architect's consultants when not included in Section 11.2 or 11.3, shall be the amount invoiced to the Architect plus Ten percent (10 %), or as follows:

...

Compensation shall be based upon mutually agreed upon Fee Proposal plus 10%

...

Schematic Design Phase	Fifteen	percent (	15	%)
Design Development Phase	Twenty	percent (	20	%)
Construction Documents Phase	Thirty-Five	percent (	35	%)
Procurement Phase	Five	percent (	5	%)
Construction Phase	Twenty-Five	percent (	25	%)

...

See Attached Exhibit D –GMC Hourly Labor Rates

~~Employee or Category~~ ~~Rate ($0.00)~~

PAGE 22

§ 11.8.2 For Reimbursable Expenses the compensation shall be the expenses incurred by the Architect and the Architect's consultants plus Ten percent (10 %) of the expenses incurred.

.1 Reimbursable expenses are estimated at $15,500.00. The Architect shall notify the Owner prior to reaching the anticipated expense limit. Reimbursable Expenses include the cost for review fees by various agencies such as DHEC, SCDOT, City of Cayce, Richland and/or Lexington County, and FEMA. Receipts and Back-up for all reimbursable expenses shall be provided with each invoice.

...

NA

...

§ 11.10.1.1 An initial payment of Zero ($ 0.00) shall be made upon execution of this Agreement and is the minimum payment under this Agreement. It shall be credited to the Owner's account in the final invoice.

Additions and Deletions Report for AIA Document B101™ – 2017. Copyright © 1974, 1978, 1987, 1997, 2007 and 2017 by The American Institute of Architects. **All rights reserved. WARNING: This AIA® Document is protected by U.S. Copyright Law and International Treaties. Unauthorized reproduction or distribution of this AIA® Document, or any portion of it, may result in severe civil and criminal penalties, and will be prosecuted to the maximum extent possible under the law.** This document was produced by AIA software at 10:20:31 ET on 10/11/2019 under Order No.1831144354 which expires on 03/12/2020, and is not for resale.
User Notes:

§ 11.10.1.2 If a Sustainability Certification is part of the Sustainable Objective, an initial payment to the Architect of Zero ($ 0.00) shall be made upon execution of this Agreement for registration fees and other fees payable to the Certifying Authority and necessary to achieve the Sustainability Certification. The Architect's payments to the Certifying Authority shall be credited to the Owner's account at the time the expense is incurred.

...

§ 11.10.2.1 Unless otherwise agreed, payments for services shall be made monthly in proportion to services performed. Payments are due and payable upon presentation of the Architect's invoice. Amounts unpaid Forty-Five (45) days after the invoice date shall bear interest at the rate entered below, or in the absence thereof at the legal rate prevailing from time to time at the principal place of business of the Architect.

...

Two and a half percent % 2.5

PAGE 23

12.1 This project also includes a large covered storage shed for City equipment with proper egress to allow for tractor trailer access located within the plant site beside the Equalization (EQ) basin and a new Guard House and perimeter fencing to secure the site.

12.2 The design team includes coordination with the Owners Vendor for IT /AV and Security. The scope of services to be included in the Construction Documents includes all conduit, raceways, junction boxes and cable tray for IT, AV, and security infrastructure to the building. All wiring, cabling, systems and hardware shall be by the owner.

12.3 The Architect shall distribute plans and specifications for bidding electronically (not printed) and the Architect shall keep a log of plan holders during the bidding process. Drawings and Specifications will be placed in local plans rooms for review by the bidders. The Architect will keep the Owner apprised of all potential bidders and plan holders for the project.

12.4 Every RFQ 013-18-19-JAG exhibit, schedule and appendix attached to this Agreement and referred to herein is hereby incorporated into this Agreement by reference unless this Agreement expressly provides otherwise. This Agreement, exhibits and other documents include, but are not limited to the Conflict of Interest Statement, Non-collusion Affidavit, Business Information Record for Subcontractors/Subcontractors, Local Business Enterprise, and Columbia Disadvantaged Business Enterprise (CDBE) forms are incorporated by reference in this Agreement and set forth the entire understanding between the parties hereto regarding the subject matter thereof.

...

NA

...

[NA] AIA Document E204™–2017, Sustainable Projects Exhibit, dated as indicated below:

...

[NA] Other Exhibits incorporated into this Agreement:

PAGE 24

a. Exhibit A-GMC Proposal Letter Dated Revised July 12, 2019 (Statement of Work)
b. Exhibit B-Compensation
c. Exhibit C-Invoicing Procedures
d. Exhibit D-Hourly Labor Rates (Appendix VI of RFQ)

Additions and Deletions Report for AIA Document B101™ – 2017. Copyright © 1974, 1978, 1987, 1997, 2007 and 2017 by The American Institute of Architects. **All rights reserved. WARNING: This AIA® Document is protected by U.S. Copyright Law and International Treaties. Unauthorized reproduction or distribution of this AIA® Document, or any portion of it, may result in severe civil and criminal penalties, and will be prosecuted to the maximum extent possible under the law.** This document was produced by AIA software at 10:20:31 ET on 10/11/2019 under Order No.1831144354 which expires on 03/12/2020, and is not for resale.
User Notes:

e. Exhibit E-Prompt Payment Affidavit
f. Exhibit F-Sub Engineering Consultant/Subcontractor Business Information
g. Exhibit G-Proposed Schedule
h. Exhibit H-Location Map

...

Teresa Wilson, City Manager

Marc Warren, AIA - Vice President / Sr. Architect

...

Date:

Date

OWNER *(Signature)*
Joseph D. Jaco, P.E., Director of Utility Operations
(Printed name and title)
Date

OWNER *(Signature)*
Clint Shealy, P.E., Asst. City Manager Columbia Water
(Printed name and title)
Date

OWNER *(Signature)*
Sandra Wright, CPPB, Purchasing Agent / Director of Procurement and Contracts
(Printed name and title)
Date

Additions and Deletions Report for AIA Document B101™ – 2017. Copyright © 1974, 1978, 1987, 1997, 2007 and 2017 by The American Institute of Architects. **All rights reserved. WARNING: This AIA® Document is protected by U.S. Copyright Law and International Treaties. Unauthorized reproduction or distribution of this AIA® Document, or any portion of it, may result in severe civil and criminal penalties, and will be prosecuted to the maximum extent possible under the law.** This document was produced by AIA software at 10:20:31 ET on 10/11/2019 under Order No.1831144354 which expires on 03/12/2020, and is not for resale.
User Notes:

Certification of Document's Authenticity

AIA® Document D401™ – 2003

I, , hereby certify, to the best of my knowledge, information and belief, that I created the attached final document simultaneously with its associated Additions and Deletions Report and this certification at 10:20:31 ET on 10/11/2019 under Order No. 1831144354 from AIA Contract Documents software and that in preparing the attached final document I made no changes to the original text of AIA® Document B101™ – 2017, Standard Form of Agreement Between Owner and Architect , as published by the AIA in its software, other than those additions and deletions shown in the associated Additions and Deletions Report.

_____

(Signed)

_____

(Title)

_____

(Dated)

AIA Document D401™ – 2003. Copyright © 1992 and 2003 by The American Institute of Architects. **All rights reserved. WARNING: This AIA® Document is protected by U.S. Copyright Law and International Treaties. Unauthorized reproduction or distribution of this AIA® Document, or any portion of it, may result in severe civil and criminal penalties, and will be prosecuted to the maximum extent possible under the law.** This document was produced by AIA software at 10:20:31 ET on 10/11/2019 under Order No.1831144354 which expires on 03/12/2020, and is not for resale.
User Notes:
(927742022)

EXHIBIT A - Statement of Work

Goodwyn Mills Cawood

1219 Wayne Street
Columbia, SC 29201

T (803) 766-1235

www.gmcnetwork.com

City of Columbia
L. Maxwell Morgan, III, P.E.
Wastewater Project Manager
Columbia Water Department of Engineering
P.O. Box 147
Columbia, SC 29217

Date: July 3, 2019 – Revised July 12, 2019

RE: SS7382 Wastewater Compliance & Lift Station Maintenance Bldg.

Mr. Morgan,

Goodwyn Mills Cawood is pleased to have this opportunity to provide a Fee Proposal for the SS7382 Wastewater Compliance & Lift Station Maintenance Building to be located at the corner of Simmon Tree Lane and Metro Lane. This proposal is for the new 7,600 SF Wastewater Compliance and Lift Station Maintenance Facility with an attached 5,000 SF workshop/warehouse and also includes a large covered storage shed for City equipment with proper egress to allow for tractor trailer access located within the plant site beside the Equalization (EQ) basin as well as a new guardhouse and perimeter fencing. This proposal will include Profession Design Services beginning with Program Verification and Schematic Design through the Construction Administration of the Project (CA), including Architecture, Civil Engineering, Flood Plain Mitigation, Plumbing, Mechanical, Fire Protection, and Electrical Engineering as well as Landscape Architecture and Cost Estimating services. GMC, along with the associated consultants, will provide the necessary bid documents to communicate the design intent, facilitate the bidding process and provide CA services during construction.

BASIC SERVICES:

- Civil Engineering: Civil Engineering associated with site grading, storm water system design, paving, and utilities is included herein and shall be performed by GMC. As part of this Civil Engineering Service, GMC will also participate in the Re-Zoning of the existing property to an appropriate designation for the project.
- Flood Plane Mitigation: Engineering Services associated with Flood Plane Modeling, mitigation strategies, and FEMA submission and approval process are included herein and shall be performed by Chao & Associates.
- Architecture: We have included comprehensive architectural design services for the project including 3-D modeling of the building at each stage, interior design services, and multiple rendering view of the proposed facility.
- Structural Engineering: Structural Engineering shall be performed by Chao & Associates for the Building, Large Covered Storage Shed and Guard House under this agreement.
- M&P Engineering: Mechanical and Plumbing Systems design shall be performed by Swygert & Associates under this agreement. A dedicated Air conditioning system will be provided for the Server Room. In addition, the design will include requirements for CMMS Management software that is compatible with the existing systems on campus for systems integration.
- Electrical Engineering: Belka Engineering Associates will perform electrical engineering for the project and shall include an emergency generator for the entire facility and coordination with IT, AV and Security systems. The Construction Documents will include all conduit, raceways, junction boxes and cable tray for IT, AV, and security infrastructure to the building. All wiring, cabling, systems and hardware shall be by the owner.
- Fire Protection Engineering: Basic Services shall include designing of the new sprinkler system for the new building, sprinkler systems for the Large Covered Storage Shed and Guard House are excluded.

GMC

- Landscape Architecture: Landscape Architecture for the project site, including the Large Covered Storage Shed and Guard House is included in this agreement.
- Cost Estimating: Cost estimates at SD, DD and CDs will be provided under this agreement.
- CA Services: GMC will provide CA Services as outlined in the AIA B101-2017 Contract Document as part of basic services including OAC meetings every 2 weeks including a walk-through of the project, Field Reports for each site visit Shop Drawing and RFI review and response, RFI and Submittal Log, Processing of Pay Applications and Change Orders, Substantial Completion Review, Development of Punch List, Final Completion Review and 1-year warranty review. The number of site visits is estimated at 24 and includes approximately an 11-month construction period with 22 regular OAC meetings, 1 Substantial Completion Review, and 1 Final Inspection. We will also attend additional site visits and meetings during construction to coordinate specialty items such as pre-construction and coordination meetings as they arise. We have assumed an additional 5 visits to cover these as they arise. GMC will also review the project closeout documents and record drawings at the end of construction. The consultants will also provide on-site CA services on an as needed basis. GMC will coordinate with each consultant to bring them to the site when their portion of the work reaches certain milestones.

ADDITIONAL SERVICES:

Additional services are those services outside of the scope noted herein, or services that were not anticipated at the writing of this agreement, or are special services requested by the Owner. Should additional Services be required during this project, we will notify the Owner prior to commencing said work. Approved Additional services of our Consultants will be invoiced at 1.10 times our cost. Approved Additional Services for in-house design or administration services will be invoiced in accordance with the Architect's Hourly Rate Schedule attached to the original contract.

- No Additional Services are provided as part of this proposal. All services are listed under basic services and are included.

EXCLUDED SERVICES:

- Geotechnical Exploration: GMC can provide geotechnical services if determined to be necessary for establishing seismic design category, additional footing and exterior paving recommendations. It is our understanding that this service will be procured by the City of Columbia directly. GMC will provide a narrative, preliminary site plan, boring locations, and specific project needs to the Geotechnical Engineer to ensure that the project received the necessary information.
- Surveying: Site Surveying and Construction Staking, including as-built surveying, is excluded. GMC can provide these services and will submit a proposal upon request. It is our understanding that this service will be procured by the City of Columbia directly.
- Hazardous Materials Survey and/ or Environmental Evaluation: We have excluded the identification and/or remediation of hazardous materials. These services, if required, shall be performed by Others under separate contract.
- Presentations and meetings required by outside Governing Authorities are excluded from Basic Services fees as the quantity and duration are unknown. These services can vary widely by jurisdiction, and will be performed on an hourly basis when/where required. We have included the regular correspondence and table top review with the Building Official in our fee structure. If these services exceed the anticipated review and approval process, GMC will advise the City prior to proceeding.
- Off-site Improvements including utilities, roadways and similar infrastructure work required of a project and located outside of the property boundaries are excluded unless specifically included in the Scope of Services.
- Traffic Studies, Wetland Delineations and Similar Impact Assessing Studies which may be required by jurisdictional authorities.

GMC

- Sustainability Design: GMC will design the facility in a manner that complies with the Applicable Building Codes utilizing sustainable building practices, but LEED or Green Globes Certification services are excluded.
- Third Party Testing and Commissioning are services to be provided directly by the owner and are therefore excluded from the scope of services provided by GMC.

PROJECT SCHEDULE:

- We approach each project with professionalism and diligence and strive to maintain project schedule commitments. Our goal is to complete the Construction Documents for the Project by the end of 2019 with submissions to the City at key milestones for your review and approval.
- The project will require several reviews by various agencies including the City of Cayce, Richland County, DHEC, and FEMA. The project team will work with each agency to determine the necessary steps, submissions and approval periods necessary to proceed with construction.
- GMC will produce a project schedule during the program verification phase.

COMPENSATION:

- BASIC SERVICES FEES: GMC proposes to perform the work noted above as Basic Services for a Lump Sum Fee of $330,000.00 (Three Hundred, Thirty Thousand Dollars) including all of the services noted above including Architecture, Civil, Flood Plane Mitigation Mechanical, Plumbing, Fire Protection, Electrical Engineering, Landscape Architecture and Cost Estimating services through the completion of construction.
    - **Lump Sum Phase Fee** **$ 330,000.00**

- ADDITIONAL SERVICES FEES: No Additional Services are included in this Fee Proposal. A separate proposal to modify the Owner / Architect Agreement will be issued if additional become necessary.

REIMBURSABLE EXPENSES:

Reimbursable Expenses are project related expenses that accrue over the course of design of the project. Our estimated reimbursable expenses shall not exceed $15,500.00 for the project. The following expenses are reimbursable, and will be invoiced monthly as incurred at 1.10 times our cost:

- Printing/ mounting and material costs including drawings for presentations, meetings, contractor pricing, permitting, and discussion purposes.
- Travel expenses, lodging, and meals directly associated with the project and incurred by our employees will be considered a reimbursable expense. Automobile travel associated with the project and incurred by our employees and consultants located greater than 30 miles from the project site will be invoiced at $0.48/ mile. Travel to the site from the GMC Greenville office is estimated at $150.00 per visit.
- Professional renderings requested by the Owner outside of those itemized above.
- Reimbursable expenses of our Consultants are Owner reimbursable expenses. Consultant reimbursable expenses include, but are not limited to, travel expenses, plot costs for drawings transmitted to the Architect, mileage, lodging, out-of-town meals and similar project related charges.
- We do not consider telephone charges (including long distance), faxing, scanning, in-house small document copying, costs associated with e-mail correspondence or costs associated with maintaining our CAD software and systems as reimbursable expenses.
- Permit, Submission and Fees to various agencies for design review. Reimbursable Expenses include the cost for review fees by various agencies such as DHEC, SCDOT, City of Cayce, Richland and/or Lexington County, and FEMA. This does not include the cost for any "Building

GMC

Permits" or "Business Licenses" associated with the construction as these will be secured and paid for by the General Contractor and/or the appropriate subcontractor.

DISADVANTAGE BUSINESS PARTICIPATION:

GMC understands the challenges faced by Small, Disadvantaged, Minority and/or Woman-Owned Business Enterprises. We have developed strong working relationships with various DBE, MBE, and WBE firms who are knowledgeable in the engineering and architecture industry and have built reputations for quality, timely service. GMC will partner with Chao and Associates, Inc. and Rebecca M. Looney and Associates, Inc. on this project. To perform various services as follows:

• Flood Plane Mitigation:	Chao & Associates	$23,000.00
• Structural Engineering:	Chao & Associates	$35,000.00
• Landscape Architecture:	Rebecca M. Looney	$ 19,950.00
TOTAL:		**$77,950.00**

For this project, the design team has a Disadvantaged Businesses Participation equals 22.25 percent of the total design fee.

PAYMENT TERMS:

Professional services will be invoiced monthly in accordance with the status of the work. Payments are due 30 days from the invoice date, and are consider past-due thereafter. Past-due invoices will accrue interest at a rate of one percent (1%) per month.

LIABILITY INSURANCE:

Goodwyn Mills & Cawood Inc. maintains Workmen's compensation, comprehensive commercial general liability, and professional liability (E&O) insurance coverage. A copy of our insurance certificate is available upon request.

FORM OF CONTRACT:

Based on a negotiated or competitive bid process for selection of the General Contractor, South Carolina Division of Procurement Services, Office of State Engineer Version of AIA Document Form B-101-2007, Standard Form of Agreement between Owner and Architect shall serve as the basis of our agreement. Our fee structure is based on the use of the standard AIA language. Should the Owner require modification to the standard language which materially changes the Architect's scope of services, liability, or project related costs, we reserve the right to adjust the Basic Services fee structure proposed herein. We will commence work within seven (7) calendar days of the Owner's acceptance of this proposal.

Please feel free to contact us at your convenience to discuss the terms of this proposal and any comments or questions concerning this proposal. We are looking forward to continuing to work with you on this exciting project.

Sincerely,

Marc Warren, AIA LEED AP BD+C
Vice President / Senior Architect

Cc: Bob Probst, City of Columbia
Kevin Laird, GMC
Keith McLeod, GMC

EXHIBIT B

COMPENSATION

City of Columbia

CIP # SS7382

Wastewater Compliance & Lift Station Maintenance Building

Compensation for services provided under Tasks 1 through 5 as outlined in Exhibit A, Statement of Work, has been established at total Fee for Professional Services of $345,500.00. This includes $330,000.00 of lump sum tasks and $15,500.00 of reimbursable expenses billed as expenses occur. Lump Sum costs for each task are clearly labeled in the chart below.

An Estimated breakdown of the fee is shown in the following table:

		CIP # SS7382			
Task	**Description**	**Percentage**	**Fee**	**Subconsultant**	**Total**
Task 1	Schematic Design Phase	15%	$29,850.00	$19,650.00	$49,500.00
Task 2	Design Development Phase	20%	$39,800.00	$26,200.00	$66,000.00
Task 3	Construction Document Phase	35%	$69,650.00	$45,850.00	$115,500.00
Task 4	Procurement Phase	5%	$9,950.00	$6,550.00	$16,500.00
Task 5	Construction Phase	$25	$49,750.00	$32,750.00	$82,500.00
	Total of Contract		$199,000.00	$131,000.00	$330,000.00
	Reimbursable Expenses		$15,500.00	$0.00	$15,500.00
	Total of Contract		$214,500.00	$131,000.00	$345,500.00
	% of Contract to Subconsultants				39.7%
	% of Contract to CDBE				22.4%

*Lump Sum Tasks

The Engineer's requirements for Subconsultant and CDBE Participation is 20%

Invoicing Procedure: Exhibit C

1. The City's Project Manager or his/her designee must review all invoices prior to payment.

2. The Consultant's invoice must contain sufficient detail by task and resource and should be easily traceable to the work completed on the project schedule. Descriptions used in the project schedule shall match those descriptions contained in the Consultant's invoice.

3. The work completed on the Consultant's project schedule must be the basis for full or a percentage of payment for work completed on the Consultant's invoice.

4. The Consultant will not request payment for taxes on Professional Services, labor or installation fees.

5. The Consultant will not invoice, or request payment for any equipment or services that may be specified in this Agreement prior to the delivery of said equipment or performance of said services.

6. The Consultant shall adhere to an agreed-upon delivery schedule for equipment and/or services. This is to ensure that the City does not pay for the advanced delivery of equipment that was not approved for delivery and/or have to warehouse or make space for unanticipated equipment deliveries. Exceptions to this requirement must be approved by the City's designated Project Manager and Purchasing Agent in writing.

7. All invoices shall include a valid Purchase Order number on the bill. If an approved emergency purchases are required for any reason before a purchase order number is available, a copy of the emergency request for purchase should accompany the Consultant's invoice.

8. The Consultant shall name a representative that will be responsible for reviewing all invoicing concerns that the City may have regarding this project.

9. The Consultant shall submit receipts for all actual expenses.

10. Travel expenses including airfare and car rental shall be invoiced at cost, without markup and with approved documentation (Note: This section does not apply to travel within the Columbia region for work being performed for the Agreement. It pertains to ***approved*** travel to and from Columbia if necessary to fulfill the terms of the Agreement.). Travel expenses apply only if applicable and approved by the City.

11. Lodging shall be invoiced up to the per diem rate according to the General Services Administration (GSA) rates established at www.gsa.gov, based on the date of travel. Lodging expenses apply only if applicable and approved by the City.

12. Field documents and other equipment/supplies shall be invoiced at cost only, with no markup, and the invoice must be submitted with approved documentation (packing slip/vendor invoice).

13. Other required non-labor expenses that may be applicable to the project and pre-approved by the City's designated Project Manager shall be invoiced at cost only, with no markup, and the invoice must be submitted with approved documentation (packing slip/vendor invoice).

14. Each invoice/payment request shall identify the percentage and dollar amount that will be paid to the Subconsultant and/or vendor for work performed and materials/products furnished. If required, the Consultant shall submit supporting documentation as required by the designated point of contact to support the amount being invoiced.

15. The Consultant shall provide the names of the Subconsultants and/or vendors and a description of the work performed in the invoice/request for payment. The Consultant shall also provide a breakdown of the supplies and materials being billed by each Subconsultant and/or vendor and the dollar amount to be reimbursed by the City.

Exhibit D

RFQ013-18-19-JAG The Design of Wastewater Compliance and Lift Station Maintenance Facility

APPENDIX VI - LABOR RATES

Firm Name: Goodwyn, Mills and Cawood, Inc.

HOURLY RATES

Please provide Hourly Rate Sheets for all personnel assigned to the Project and for all categories of personnel expected to be assigned to the project.

Principal Kevin Laird, PE	$250 / hour
Project Manager Marc Warren, AIA	$175 / hour
Staff Engineer/Architect Justin Lucas, AIA Harold McLeod, PE David Harding, AIA	$165 / hour
CAD Technician	$110 / hour
Additional: Senior Engineer/Architect Mike Keeshen, AIA Keith McLeod, PE	$185 / hour
Additional: Administrative	$90 / hour

Please provide a brief description of each category including years of experience, certification, etc. You are welcomed to add additional categories if not already listed.

Exhibit E – Prompt Payment Affidavit

Consultant will place a check in the appropriate box below that applies to this payment request.

Re: Payment Request No. _____

I, _____ (Name), the _____ (Title - e.g., President, Vice President, etc.) of _____ ("Company"), do state the following with regard to payments made under Contract No. _____ ("Contract"):

1. ____Consultant, at the first tier, both DBE and non-DBE, who completed work and were listed for payment on the prior Payment Request No. _____, were paid no later than twenty (20) calendar days after Company received payment from the City.

2. ____Copies of invoices and cancelled checks for Consultant at the first tier who were paid under the prior payment request have been delivered or mailed to the Construction Management Division. In addition, Company has attached to the current Payment Request all lien waivers for prior subcontractor payments and any other documentation required by the City. (Failure to attach all required documentation to the Payment Request or forward cancelled checks and invoices to the City's Construction Management Division may cause the Payment Request to be rejected by City.)

3. ____All retainage amounts withheld from any Consultant who satisfactorily completed its portion of the contract work, including punch list items, were paid to the Consultant(s) no later than fourteen (14) calendar days after it satisfactorily completed its work, whether or not City has paid said retainage amounts to Consultant. Attach a copy of the cancelled check evidencing payment of each retainage amount.

4. ____There was no delay in or postponement of any payment owed to a Consultant, whether periodic payment or retainage amount, except for good cause and after receipt of prior written approval from the City's Fleet Division Administrator.

Attach a copy of the written approval from the City of Columbia.

_____
Company Name

_____
Signature

_____
Print Name

Date: _____

Subscribed and sworn to before me this ____ day of _____ 20___.

_____
Notary Public

EXHIBIT F

SUB ENGINEERING CONSULTANT/SUBCONTRACTOR BUSINESS INFORMATION

Project: Wastewater Compliance and Lift Station Maintenance Facility (SS7382-02)

The Bidder shall list all subcontractors and vendors, who will be providing subcontracting services, furnishing materials, etc. for this project. The list shall be submitted in the format provided below. Any proposed changes from the list shall be submitted in writing to the City prior to initiation of any action, with the reason for proposed changes.

MUST BE TYPED AND REFLECT ONLY THOSE PROVIDING A SERVICE "NO LINE STRIKE THROUGH"

Business Name & Address	Contact Name & Telephone	Services and/or Materials Provided	Cost of Services and/or Material ($ Value)	Percentage of Total Agreement	MBE, WBE, SBE, DBE, LBE (indicate all that apply)	Is your Business CDBE Approved? Yes or No
Chao & Associates 1728 Main Street Columbia, SC 29201	Jimmy Chao 803-765-1766	Flood Plane Mitigation Engineering	$22,000.00	6.67%	MBE Cert. #: 201590 Classification 09	Yes
Chao & Associates 1728 Main Street Columbia, SC 29201	Jimmy Chao 803-765-1766	Structural Engineering	$33,000.00	10.00%	MBE Cert. #: 201590 Classification 09	Yes
Swgert & Associates 1315 State Street Cayce, SC 29033	Todd Swygert 803-791-9300	Mechanical Engineer	18,500.00	5.60%	NA	No
Belka Engineering Associates 7 Cluster Court Suite 201 Columbia, SC 29210	Cliff Stingfield 803-731-6050	Electrical Engineer	$30,000.00	9.09%	NA	No
Rebecca M. Looney & Associates (Positivehire) P.O. Box 24 Ballentine, SC 29002	Rebecca Looney 803-240-7990	Landscape Architecture	$19,000.00	5.75%	WBE Cert. #: 201746 Classification 04	Yes
Matthiessen Cost Consultants, LC 125 Bay Point Drive Chapin, SC 29036	Genn Matthiessen 803-960-1866	Cost Estimating	$8,500.00	2.57%	NA	No

TOTAL: $ $131,000.00

I certify this information is true, correct, complete and active.

Business Name: Goodwyn Mills & Cawood

Representative Name / Title: Marc Warren, AIA LEED AP BD+C

Date: July 17, 2019

EXHIBIT G

SS732 Wastewater Compliance & Lift Station Maintenance Building - Project Schedule

City of Columbia

Project Start Date 8/20/2019 (Tuesday) Display Week 1

	TASK	START	END	WORK DAYS
1	**Schematic Design Phase**		-	-
1.1	Project Kick-off / Visioning	Tue 8/20/19	Tue 8/20/19	1
1.1.1	Program Verification	Tue 8/20/19	Wed 9/04/19	12
1.1.2	Concept Design Meeting	Thu 8/29/19	Thu 8/29/19	1
1.2	Schematic Design	Tue 8/27/19	Wed 9/25/19	22
1.2.1	Design Meeting	Wed 9/04/19	Wed 9/04/19	1
1.2.2	Design Meeting	Wed 9/11/19	Wed 9/11/19	1
1.2.3	Design Meeting	Wed 9/18/19	Wed 9/18/19	1
1.3	SD Package Review	Wed 9/25/19	Wed 10/09/19	11
1.4	Cost Estimating	Wed 9/25/19	Wed 10/09/19	11
2	**Design Development Phase**		-	-
2.1	Design Development	Wed 9/25/19	Fri 11/08/19	33
2.1.1	Design Meeting	Wed 10/09/19	Wed 10/09/19	1
2.1.2	Design Meeting	Wed 10/23/19	Wed 10/23/19	1
2.2	DD Package Review	Fri 11/08/19	Mon 11/25/19	12
2.3	Cost Estimating	Fri 11/08/19	Mon 11/25/19	12
3	**Construction Document Phase**		-	-
3.1	Construction Document	Fri 11/08/19	Tue 1/14/20	48
3.1.1	Design Meeting	Tue 11/26/19	Tue 11/26/19	1
3.1.2	Design Meeting	Tue 12/10/19	Tue 12/10/19	1
3.1.3	Design Meeting	Tue 1/07/20	Tue 1/07/20	1
3.2	CD Package Review	Tue 1/14/20	Thu 1/30/20	13
3.3	Cost Estimating	Tue 1/14/20	Thu 1/30/20	13
4	**Procurement Phase**		-	-
4.1	Permitting	Tue 1/14/20	Wed 3/25/20	52
4.2	Bidding and Award	Tue 2/18/20	Wed 3/18/20	22
4.2.1	Bid Advertisement	Tue 2/18/20	Tue 2/18/20	1
4.2.2	Pre-Bid Conference	Wed 2/26/20	Wed 2/26/20	1
4.2.3	Bid Opening	Thu 3/19/20	Thu 3/19/20	1
4.2.4	Contract Negotiations	Mon 3/30/20	Fri 4/10/20	10
5	**Construction Phase**		-	-
5.1	Construction Period	Wed 4/15/20	Wed 2/10/21	216
5.1.1	Substantial Completion	Wed 2/10/21	Wed 2/10/21	1
5.1.2	Final Completion	Wed 3/10/21	Wed 3/10/21	1
5.2	Project Closeout	Wed 3/10/21	Thu 4/15/21	27

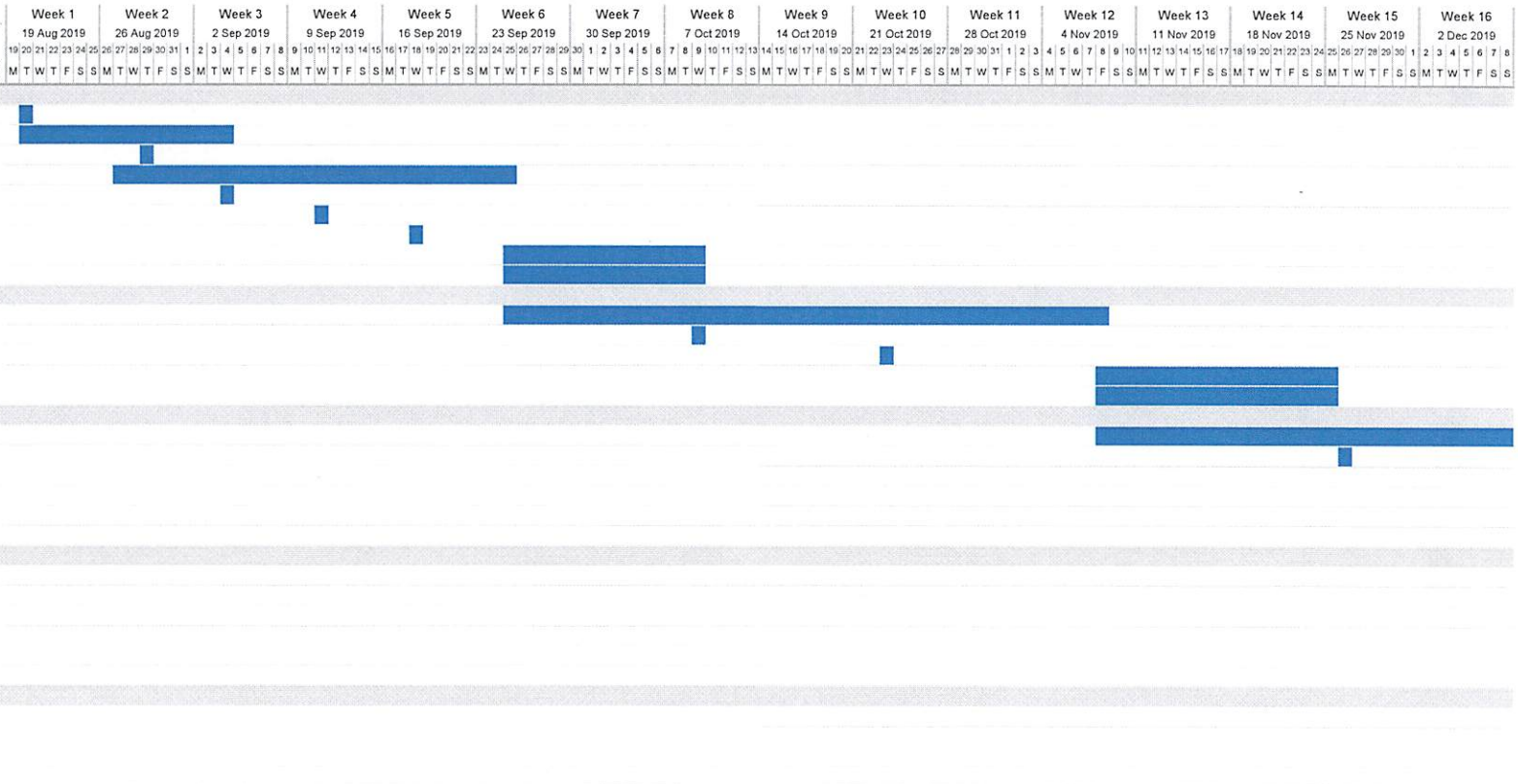

SS732 Wastewater Compliance & Lift Station Maintenance Building - Project Schedule

City of Columbia

Project Start Date 8/20/2019 (Tuesday) Display Week 17

	TASK	START	END	WORK DAYS
1	**Schematic Design Phase**		-	-
1.1	Project Kick-off / Visioning	Tue 8/20/19	Tue 8/20/19	1
1.1.1	Program Verification	Tue 8/20/19	Wed 9/04/19	12
1.1.2	Concept Design Meeting	Thu 8/29/19	Thu 8/29/19	1
1.2	Schematic Design	Tue 8/27/19	Wed 9/25/19	22
1.2.1	Design Meeting	Wed 9/04/19	Wed 9/04/19	1
1.2.2	Design Meeting	Wed 9/11/19	Wed 9/11/19	1
1.2.3	Design Meeting	Wed 9/18/19	Wed 9/18/19	1
1.3	SD Package Review	Wed 9/25/19	Wed 10/09/19	11
1.4	Cost Estimating	Wed 9/25/19	Wed 10/09/19	11
2	**Design Development Phase**		-	-
2.1	Design Development	Wed 9/25/19	Fri 11/08/19	33
2.1.1	Design Meeting	Wed 10/09/19	Wed 10/09/19	1
2.1.2	Design Meeting	Wed 10/23/19	Wed 10/23/19	1
2.2	DD Package Review	Fri 11/08/19	Mon 11/25/19	12
2.3	Cost Estimating	Fri 11/08/19	Mon 11/25/19	12
3	**Construction Document Phase**		-	-
3.1	Construction Document	Fri 11/08/19	Tue 1/14/20	48
3.1.1	Design Meeting	Tue 11/26/19	Tue 11/26/19	1
3.1.2	Design Meeting	Tue 12/10/19	Tue 12/10/19	1
3.1.3	Design Meeting	Tue 1/07/20	Tue 1/07/20	1
3.2	CD Package Review	Tue 1/14/20	Thu 1/30/20	13
3.3	Cost Estimating	Tue 1/14/20	Thu 1/30/20	13
4	**Procurement Phase**		-	-
4.1	Permitting	Tue 1/14/20	Wed 3/25/20	52
4.2	Bidding and Award	Tue 2/18/20	Wed 3/18/20	22
4.2.1	Bid Advertisement	Tue 2/18/20	Tue 2/18/20	1
4.2.2	Pre-Bid Conference	Wed 2/26/20	Wed 2/26/20	1
4.2.3	Bid Opening	Thu 3/19/20	Thu 3/19/20	1
4.2.4	Contract Negotiations	Mon 3/30/20	Fri 4/10/20	10
5	**Construction Phase**		-	-
5.1	Construction Period	Wed 4/15/20	Wed 2/10/21	216
5.1.1	Substantial Completion	Wed 2/10/21	Wed 2/10/21	1
5.1.2	Final Completion	Wed 3/10/21	Wed 3/10/21	1
5.2	Project Closeout	Wed 3/10/21	Thu 4/15/21	27

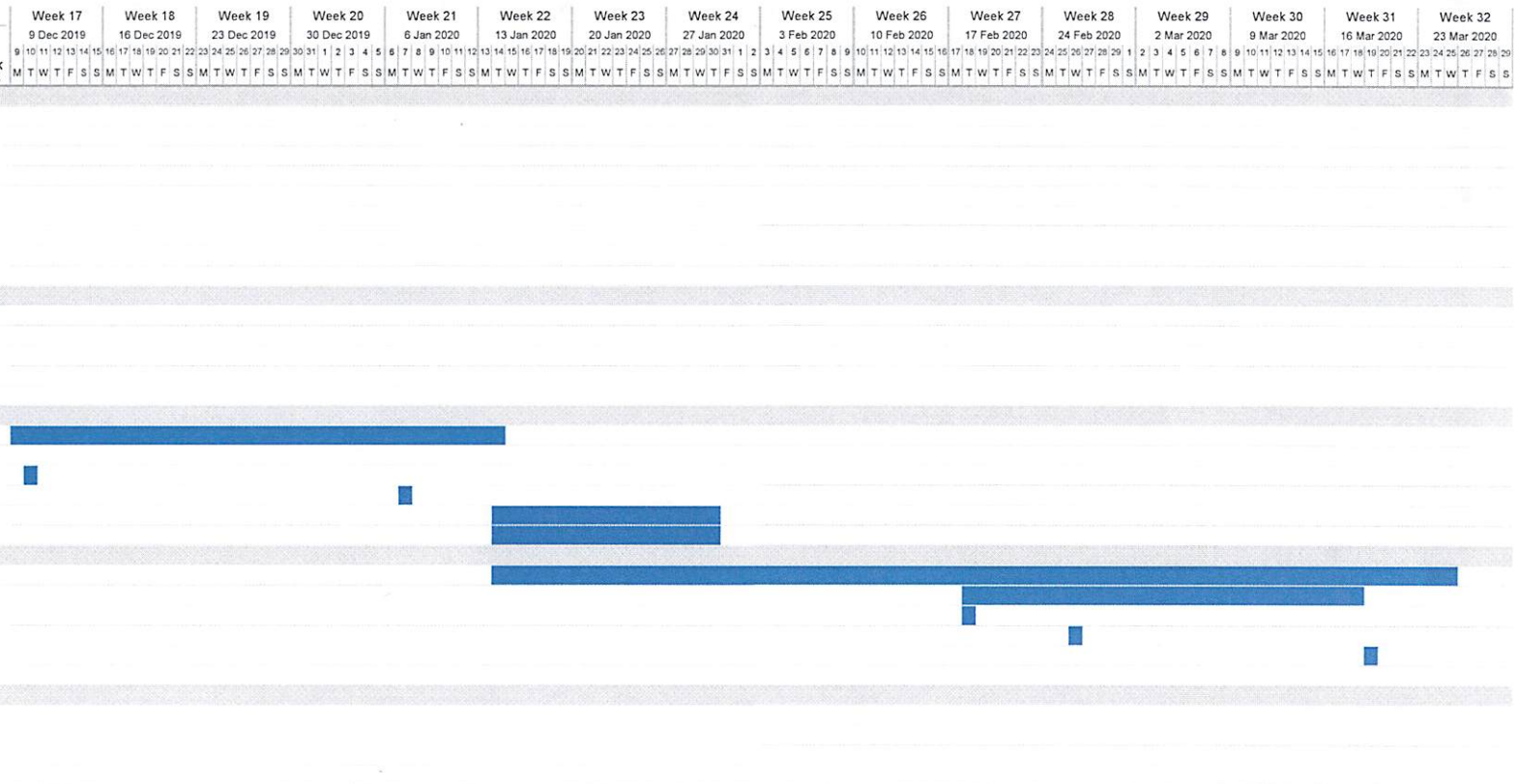

Clean Water 2020
Columbia's Clear Vision For Clean Water

CITY of COLUMBIA, S.C.
RESTITA VIRTUTUM REGINA
We Are Columbia

SAV: JULY 18, 2019
CW2020\Production_Maps\ProjectLocation_Maps\CIP\SS7382

Wastewater Lift Station

WTP Metro WWTP

Basin Boundary

N

1 inch = 500 feet

0 125 250 500 750 Feet

SS738202 Wastewater Compliance and Lift Station Maintenance Facility

Prepared For:

City of Columbia

Inter-Office Memorandum

To: Missy Gentry, Assistant City Manager
Clint Shealy, Assistant City Manager
Teresa Wilson, City Manager

From: Melissa Lindler, OBO Director

Date: 01/25/2019

Project #: SS7382 Design for Wastewater Compliance and Lift Station Maintenance Bldg.

Total Project Amount: $300,000.00

Project Description: New building with a 7,636 SF office building plus an attached 5,084 SF warehouse. This facility & Lift Station Maintenance Facility will house plant staff and the SCADA system for wastewater (This is the design portion only)

Goals for this project are: **CDBE 10%**

Please review the attached:

1.) Estimated subcontracting area/costs provided by the Engineer
2.) Compliance Department recommended goal/percentage for CDBE participation for overall project. (Above)

Please indicate your approval by your signature below and return to the Compliance Department of Office Business Opportunities when you have completed your review. Thank you.

Review Approved:

Missy Gentry, Assistant City Manager Date: 1/28/19

Clint Shealy, Assistant City Manager Date: 1/28/19

Teresa Wilson, City Manager Date: 1/29/19

City Of Columbia – CDBE Project Form

Please complete all items below with your recommendations for subcontractor opportunities and estimated cost for the relative work.
The Office of Business Opportunities - Compliance Department will recommend a CDBE goal to the City Manager for each project.

Project Name & Number:

SS7382 – Wastewater Compliance & Lift Station Maintenance Facility

Brief Project Description:

New building with a 7,636 SF office building plus an attached 5,084 SF warehouse. This facility will house plant staff and the SCADA system for wastewater **(This is the design portion only)**

1. **List of potential subcontracting areas, estimated costs for each subcontracting area, as well as NAICS code (if available):**

	Subcontracting Areas:	Materials / Service	Estimated Costs:	NAICS Code:
1.)	Architecture	M / S	$150,000	541310
2.)	Engineering*	M / S	$150,000	541330
3.)		M / S		
4.)		M / S		
5.)		M / S		
6.)		M / S		
7.)		M / S		
8.)		M / S		

*Engineering consist of civil, structural, geotechnical, mechanical (Plumbing & HVAC), electrical, etc. At this preliminary design stage, we have no way of determining accurate Engineering amounts. Please know the City's contract will be with the Architect and the Architect will have separate contracts with their sub consultants. We do feel there are opportunities for DBE participation for companies who offer building design services. OBO and Engineering have worked together and agreed to a 10% CDBE goal for this project.

2. **Total estimated project cost:**

EST. TOTAL PROJECT COST $_300,000 for architecture/engineering design

Please email this form to the Compliance Team by emailing the completed sheet to jmnelly@columbia.net.

Once received we will send a memo to the City Manager to get approval of our recommendation.

Contract

City of Columbia, South Carolina

CIP #WM3906

Water Main Construction Along Sylvan Drive and Satchel Ford Road (WM3906) MPP

Bid #016-19-20-DS

This Contract is made by and between City of Columbia, South Carolina, hereinafter called Owner, and **Stutts and Williams, LLC** with legal address and principal place of business at 416 Cedarcrest Drive, Lexington, SC 29073, hereinafter called Contractor. Owner and Contractor in consideration of the mutual covenants hereinafter set forth, agree as follows:

ARTICLE 1. WORK.

1.1 Contractor shall perform the Work as specified or indicated in the Contract Documents.

ARTICLE 2. ENGINEER.

2.1 The Project has been designed by the City of Columbia.

ARTICLE 3. CONTRACT TIME.

3.1 The Contract Time shall be two hundred seventy (270) consecutive calendar days from the said date of commencement as defined in the Notice to Proceed (NTP) to substantial completion and an additional thirty (30) consecutive calendar days to final completion for a total construction time of three hundred (300) consecutive calendar days from the commencement date as defined in the Notice to Proceed (NTP).

3.2 Contractor agrees that the Work shall be prosecuted regularly, diligently and uninterruptedly and at such rate of progress as will insure full completion thereof within the Contract Time stated above. It is expressly understood and agreed, by and between Contractor and Owner that the Contract Time is reasonable for the completion of the Work, taking into consideration the average climatic range and usual industrial conditions prevailing in this locality.

ARTICLE 4. CONTRACT PRICE.

4.1 Owner will pay Contractor for performance of the Work in accordance with the Contract Documents in current funds at the contract price agreed upon in the Contractor's Bid Form attached to this Contract which establishes the contract price as **One Million, Five Hundred and Three Thousand, Seven Hundred Seventy-Five Dollars and Zero Cents ($1,503,775.00).**

ARTICLE 5. APPLICATIONS FOR PAYMENT

5.1 Contractor shall submit Applications for Payment in accordance with Part 15 General Specifications of the City's Engineering Regulations. Applications for Payment will be processed as provided in the Conditions of the Contract.

ARTICLE 6. PROGRESS AND FINAL PAYMENTS

6.1 Owner will make progress payments on account of the Contract Price on the basis of Contractor's Applications for Payment, monthly during construction as provided below. All progress payments will be on the basis of the progress of the Work measured by the schedule of values provided for in the General Specifications.

6.2 Upon final inspection and acceptance of the Work, in accordance with Part 15 General Specifications, Owner will pay the remainder of the Contract Price.

ARTICLE 7. LIQUIDATED DAMAGES

7.1 Owner and Contractor recognize that time is of the essence of this Contract and that Owner will suffer financial loss if the Work is not completed within the Contract Time (and specific milestones) specified in Article 3 above, plus any extensions thereof allowed. They also recognize the delays, expense and difficulties involved in proving, in a legal proceeding, the actual loss suffered by Owner if the Work is not completed on time. Accordingly, instead of requiring any such proof, Owner and Contractor agree that as liquidated damages for delay (but not as a penalty) Contractor shall pay Owner **Two Hundred and Fifty Dollars and Zero Cents ($250.00)** per day for each calendar day of delay beyond the date set for substantial completion and **Two Hundred and Fifty Dollars and Zero Cents ($250.00)** per day for each calendar day of delay beyond the date set for final completion until the Work is complete.

7.2 Liquidated damages will be assessed for the above listed amounts for each and every day the Work remains incomplete beyond the date of Substantial Completion and the date of Final Completion, either date being independent of the other.

7.3 This liquidated damages provision is non-exclusive and not intended to limit Owner's remedy for breach of this Contract or delay in Contract Times.

ARTICLE 8. ASSURANCE

8.1 Contractor has familiarized himself with the nature and extent of the Contract Documents, Work, locality, and with all local conditions and Federal, State and local laws, ordinances, rules and regulations that in any manner may affect cost, progress or performance of the Work.

8.2 Contractor has studied carefully all reports of investigations and tests of subsurface and latent physical conditions at the site or otherwise affecting cost, progress or performance of the Work that were relied upon by Engineer in the preparation of the Drawings and Specifications and which have been identified in Contract Documents.

8.3 Contractor has made or caused to be made examinations, investigations and tests and studies of such reports and related data [in addition to those referred to in the above paragraph] as Contractor deems necessary for the performance of the Work at the Contract Price within the Contract Time and in accordance with the other terms and conditions of the Contract Documents; and no additional examinations, investigations, tests, reports or similar data are or will be required for such purposes.

8.4 Contractor has correlated the results of all such observations, examinations, investigations, tests, reports and data with the terms and conditions of the Contract Documents.

8.5 Contractor has given Engineer written notice of any conflict, error or discrepancy that Contractor has discovered in the Contract Documents and the written resolution thereof by Engineer is acceptable to Contractor.

8.6 Contractor agrees that the Contract Documents are sufficient in scope and detail to indicate and convey understanding of all terms and conditions for performance of the Work.

ARTICLE 9. CONTRACT DOCUMENTS.

9.1 Contractor agrees, under the terms as stated in the Specifications and Contract Documents and at his/its/their own proper cost and expense, to furnish all the materials, supplies, machinery, equipment, tools superintendence, labor, insurance, and other accessories and services necessary to complete the said project in accordance with the conditions and prices stated in the Proposal, the Instructions to Bidders, the General Conditions of the Contract or General Specifications, the construction specifications, provisions of the Contract Documents, the plans, which include all maps, plats, blue prints, and other drawings and printed or written explanatory matter thereof.

9.2 The Contract Documents that comprise the Contract between Owner and Contractor are attached hereto and made a part hereof and consist of the following:

9.2.1 Invitation for Bid.

9.2.2 Instructions to Bidders.

9.2.3 Bid Form.

9.2.4 This Contract.

9.2.5 Performance and Payment Bond.

9.2.6 Part 15 "General Specifications", Part 16 "Specifications for Water Distribution System, Materials, and Construction", Part 20 "Specifications for Sodding, Fertilizing and Seeding" of the City of Columbia's Engineering Regulations.

9.2.7 Special Provisions.

9.2.8 Specifications (as listed in the Table of Contents).

9.2.9 Drawings, numbered **1** through **20**, inclusive and dated **June 2, 2016**.

9.2.10 Addenda numbers __1__, inclusive.

9.2.11 Any modification, including Change Orders, duly delivered after execution of Contract.

ARTICLE 10. TERMINATION

The City shall, at its sole option and discretion, have the right to terminate this contract for any reason whatsoever by providing the Contractor with a notice of termination to be sent by registered mail, return receipt requested. Whenever the Contractor is terminated for convenience under this clause or is wrongfully terminated under any other clause of this contract, the Contractor shall only be entitled to the actual direct costs of all labor and material expended on the job prior to the effective date of the termination plus 15% or the Contractor shall be entitled to be paid a pro-rate percentage of the total contract price which is equal to its percent of completion, whichever of the two methods provides the lowest sum to be paid to the Contractor. In no event shall the Contractor be entitled to anticipatory profit or damages for any termination under this clause. In no event shall the Contractor be entitled to assert a claim in quantum meruit or any other measure of damages other than that stated herein.

ARTICLE 11. MISCELLANEOUS

11.1 Terms used in this Contract that are defined in Part 15 General Specifications shall have the meanings assigned in the Conditions of the Contract.

11.2 Neither Owner nor Contractor shall, without the prior written consent of the other, assign or sublet in whole or in part any interest under any of the Contract Documents; and, specifically but without limitation, Contractor shall not assign any monies due or to become due without the prior written consent of Owner. In case Contractor assigns all or any part of any monies due or to become due under this Contract, the instrument of assignment shall contain a clause substantially to the effect that it is agreed that the right of the assignee in and to any monies due or to become due to Contractor shall be subject to prior claims of all persons, firms and corporations for services rendered or materials supplied for the performance of the Work called for in this Contract.

11.3 Owner and Contractor each binds himself, his partners, successors, assigns and legal representatives in respect to all covenants, Contracts and obligations contained in the Contract Documents.

11.4 The Contract Documents constitute the entire Contract between Owner and Contractor and may only be altered, amended or repealed by a Modification.

11.5 This Contract does not commit the City of Columbia to pay for any pre-bid costs. Any costs associated with IFB preparation, pre-bid conferences and any other activity prior to award of a contract shall be at the sole expense of the bidder(s). Rooms, meals, travel, telephone, data processing, administrative and clerical costs associated with the project shall be at the bidder's expense.

This Contract is subject to the final approval of Council and shall become effective on the date listed on the subsequent Notice to Proceed (NTP) and City of Columbia Purchase Order. The Contractor shall not perform work on or incur any costs associated with this contract prior to the commencement date listed on the Notice to Proceed and the City issued purchase order for work outlined herein. The City assumes no liability for any expenses incurred prior to the issuance of the NTP and purchase order.

Contractor	Owner
_____	City of Columbia, SC
BY	BY
_____	_____
	Teresa Wilson, City Manager
(CORPORATE SEAL)	(CORPORATE SEAL)
Attest	Attest
_____	_____
Address for giving notices:	Address for giving notices:
_____	Department of Procurement and Contracts
_____	1800 Main Street, 2nd Floor
_____	Columbia, SC 29201
Date: _____	Date: _____

Note: If Contractor is a corporation, an affidavit giving the principal the right to sign the Contract must accompany the executed Contract.

APPROVED AS TO FORM

Legal Department City of Columbia, SC

Event Number	BID016-19-20-DS Addendum 1	**Organization**	City of Columbia, SC
Event Title	Water Main Construction Along Sylvan Driv	**Workgroup**	Purchasing
Event Description	Information concerning Project's Procureme	**Event Owner**	Debbie Scott
Event Type	IFBs	**Email**	Debbie.Scott@columbiasc.gov
Issue Date	9/11/2019 08:30:00 AM (ET)	**Phone**	
Close Date	10/1/2019 10:00:00 AM (ET)	**Fax**	

Responding Supplier	City	State	Response Submitted	Lines Responded	Response Total
Stutts & Williams, LLC	Lexington	SC	10/1/2019 09:36:34 AM (ET)	1	$1,503,775.00
LAD Construction, LLC	Swansea	SC	10/1/2019 09:44:57 AM (ET)	1	$1,888,115.00
G H Smith Construction, Inc	Columbia	SC	10/1/2019 09:08:24 AM (ET)	1	$1,966,782.00
Carolina Tap & Bore, Inc.	West Columbia	SC	10/1/2019 09:32:59 AM (ET)	1	$2,184,652.00
North American Pipeline Manag	Marietta	GA	10/1/2019 09:39:43 AM (ET)	1	$2,569,777.00

Please note: Lines Responded and Response Total only includes responses to specification. No alternate response data is included.

CITY of COLUMBIA

INTER-OFFICE MEMORANDUM

TO: Juliet Nelly, Compliance Administrator

FROM: Debbie Scott, Procurement Contract Specialist,
Department of Procurement and Contracts

DATE: October 2, 2019

SUBJECT: BID#016-19-20-DS Water Main Construction Along Sylvan Drive and Satchel Ford Road (WM3906)

Bids for this project were opened publicly at 10:00 a.m., October 1, 2019 in the second floor Conference Room, 1800 Main Street.

The bids submitted for this project were in participation with the Mentor Protégé Program. The apparent *responsive* low bidder is Stutts & Williams, LLC, of Lexington, SC at $1,503,775.00.

Please verify the percentages listed on the Business Information Record and check for consistency to the noted dollar amount. Upon completing your review, please sign below indicating that a compliance review has been made and return to me.

Thank You.

Juliet Nelly RS 10/17/19

Juliet Nelly, Compliance Administrator

Date: 10/18/19

CITY OF COLUMBIA

Department of Utilities and Engineering
Compliance Division
P.O. Box 147 | Columbia, South Carolina 29217
Phone: 803-545-3049 Fax: 803-545-4130

MENTOR PROTÉGÉ PROGRAM
Implementation Plan

Date: 10/1/2019

Project Number: WM3906

Mentor: Stutts & Williams, LLC

Project Name: WM - Sylvan Dr & Satchel For

Protégé: Hammerhead Utilities, LLC

Duration of the Project: 300 days

Project Contract Amount: $1,503,775.00

Protégé Amount: $300,755.00

Statement of Commitment: Both Mentor and Protégé are committed to providing an adequate amount of resources and effort to execute the plan below. Mentor and Protégé acknowledge the Implementation Plan is a joint plan and agree to meet at least quarterly to verify compliance with this Plan.

1. How do the Mentor and Protégé intend to work together on the designated project? *Address contractual relationship, general roles and informal teaming arrangements.*

Mentor and protege will work together to break the project into sections and allow the protege to install multiple pipe sizes and complete full portions of the scope of work.

2. How will the specific, quantitative goals in the Annual Business Plan and MPP Agreement be implemented via the work on the project? *Address general goals here and specific goals in question 9.*

Our plan for this project will allow the portege to complete small portions of water line in its entirety with their own resources.

3. How will the team focus on developing protégé's business and implementing the actions necessary to obtain results reflected in the Mentor-Protégé Agreement? *Identify milestones, thresholds, or other indicators team that would indicate success is being achieved.*

This will allow the protege to water lines in rights of way and through neighborhoods. This experience will allow the protege to understand the attention to detail required through yards, to address homeowners' concerns, and be flexible and minimize the disruption to the homeowners.

CITY OF COLUMBIA

We Are Columbia

Department of Utilities and Engineering
Compliance Division
P.O. Box 147 | Columbia, South Carolina 29217
Phone: 803-545-3049 Fax: 803-545-4130

4. Proposed manpower and resources from both the Mentor and the Protégé is required for the project. *Address key personnel, equipment/materials, and insurance/bonding. Address special arrangements where applicable.*

Mentor:

Mentor will provide one fully, equipped crew for this project.

Protégé:

Protege will provide one fully equipped crew for this project.

Subcontractors:

Knights Companies providing flowable fill/concrete. Ferguson Waterworks providing waterline material.

Special Arrangements:

5. What scope of work to be performed by each participant of the MPP team?

a. Description of Mentor's responsibilities:

Mentor will schedule and provide all of the material for the job. Mentor will provide specialty equipment, if needed.

b. Description of Protégé's responsibilities on project:

Protege will complete sections of different line sizes.

c. Description of responsibilities that will be completed as a team:

Mentor and protege will perform live taps together. Mentor will provide the equipment.

6. What is the anticipated duration (in months) of each major phase of the project? During which phases will the Protégé be utilized?

The protege will participate in the project for approximately three months.

CITY OF COLUMBIA

We Are Columbia

Department of Utilities and Engineering
Compliance Division
P.O. Box 147 | Columbia, South Carolina 29217
Phone: 803-545-3049 Fax: 803-545-4130

7. **How will the team comply with and maintain the focus on the requirements of the program for the duration of the project?**

We will ensure the protege completes at least 20% of the project and continues to be exposed to different types of construction methods.

8. **What are the team's specific, quantitative goals and milestones for the current project?**

Complete the project with zero accidents and on schedule. We would like perform the project quickly to minimize any disruptions to the property owners.

9. **Outline of Regularly Scheduled meeting between Mentor and Protégé (Progress reporting).**

Mentor and protege will meet no less than weekly to ensure project is on schedule.

10. **Define payment schedule and financial terms identifying milestones for initial, progress and final payments.**

Protege will be paid on a monthly basis.

CITY OF COLUMBIA

We Are Columbia

Department of Utilities and Engineering
Compliance Division
P.O. Box 147 | Columbia, South Carolina 29217
Phone: 803-545-3049 Fax: 803-545-4130

11. List the Subcontractors that will be used on this project, as well as the information requested below: (The Subcontractor(s) listed below will NOT consist of your Protégé.)

Subcontractor's Name	Telephone	Address	Who will they report to?	Contract Amount	MPP, MBE, WBE, SBE	Percentage of Contract
Ferguson Waterworks	803-934-683	166 Pontiac Center Dr Elgin, SC 29045	Joey Williams	$500,000		33%
Knights Companies	803-513-573	480 Hodge Road Summerville, SC 29454	Joey Williams	$100,000		7%

12. What percentage of the project is being implemented by the Protégé? Must equate to a minimum of 20% of total contract amount.

Protégé Contract Value: $300,755.00

Percentage of Contract: 20% (Minimum of 20% of total contract amount is required)

We Are Columbia

CITY OF COLUMBIA

Department of Utilities and Engineering
Compliance Division
P.O. Box 147 | Columbia, South Carolina 29217
Phone: 803-545-3049 Fax: 803-545-4130

MENTOR-PROTEGE IMPLEMENTATION PLAN SIGNATURE SHEET

IN WITNESS WHEREOF, the parties hereto have caused these presents to be executed by their proper officials thereunto duly authorized as of the dates below indicated:

EXECUTED by Stuart C. Williams, LLC (Mentor Firm) this 1st day of Oct 2019.
Corporate SEAL

By: _____
Title: Owner

ATTEST:
By: _____
Title: Office Manager

EXECUTED by Hammerhead Utilities (Protégé Firm) this 1st day of Oct, 2019.
Corporate SEAL
By: _____
Title: CFO

ATTEST:
By: _____
Title: Bookkeeper

RECOMMENDED FOR APPROVAL:

EXECUTED by the Department of Utilities & Engineering, Compliance Division on this 18 day of October, 2019.

By: _____
Title: Compliance Administrator

Business Information Record

The Bidder shall list all subcontractors and vendors, who will be providing subcontracting services, furnishing materials, etc. for this project. The list shall be submitted in the format provided below. Any proposed changes from the list shall be submitted in writing to the Owner prior to initiation of any action, with the reason for proposed changes.

MUST BE TYPED "NO LINE STRIKE THROUGH"

Business Name and Address	Contract Name and Telephone Number	Services and / or Materials Provided	Cost of Services and / or Material ($ Value) [Column needs to equate accurately to the percentage of total contract column]	Percentage of Total Contract	MBE, WBE, SBE, DBE, LBE (indicate all that apply)	Is Your Business CDBE Approved? Yes or No
Ferguson Waterworks 166 Pontiac Center Dr. Elgin, SC 29045	David Divis (803)934-6830	Waterline material	$500,000.00	33 %		NO
Knights Companies 480 Hodge Road Summerville, SC 29454	Andy Stevenson (803)513-5739	flowable fill/ concrete	$100,000.00	7 %		NO
				%		
				%		
				%		

TOTAL AMOUNT: $ 600,000.00

I certify this information is true, correct, complete and active.

Business Name: Stutts + Williams, LLC

Representative Name / Title: Joey Williams, owner

Date: 10/1/2019

Scott, Debbie L

From:	Culclasure, Susan
Sent:	Wednesday, October 02, 2019 12:30 PM
To:	Scott, Debbie L; Nelly, Juliet M
Cc:	Porth, Gary B
Subject:	RE: IMPORTANT PROJECT: Bid#016-19-20-DS WM Const. Sylvan Drive and Satchel Ford Road WM3906
Attachments:	Rhett Culclasure.vcf

The apparent low bidder is Stutts & Williams at $1,503,775.00. It is recommended that City Council accept the proposed bid and a 10% contingency for a total cost of $1,654,152.50.

Please let me know if you need any additional information. Thanks!

Rhett

Rhett Culclasure
COC
CIVIL ENGINEERING SPECIALIST
ENGINEERING ALL

803-545-3281 Work
Susan.Culclasure@ColumbiaSC.gov
6th Floor, Office 611
1136 Washington Street
Columbia, SC 29201

CONTRACT

City of Columbia, South Carolina

CIP #WM4403 and WM4404

Water Main Upgrades for Hollywood – Rose Hill Subdivision MPP

Bid #012-19-20-DS

This Contract is made by and between City of Columbia, South Carolina, hereinafter called Owner, and **Carolina Tap and Bore, Inc.** with legal address and principal place of business at 2430 Morningside Drive, West Columbia, SC 29169, hereinafter called Contractor. Owner and Contractor in consideration of the mutual covenants hereinafter set forth, agree as follows:

ARTICLE 1. WORK.

1.1 Contractor shall perform the Work as specified or indicated in the Contract Documents.

ARTICLE 2. ENGINEER.

2.1 The Project has been designed by the City of Columbia.

ARTICLE 3. CONTRACT TIME.

3.1 The Contract Time shall be **four hundred fifty (450)** consecutive calendar days from the commencement date as defined in the Notice to Proceed (NTP) to fully complete the amount of work herein contemplated.

3.2 Contractor agrees that the Work shall be prosecuted regularly, diligently and uninterruptedly and at such rate of progress as will insure full completion thereof within the Contract Time stated above. It is expressly understood and agreed, by and between Contractor and Owner that the Contract Time is reasonable for the completion of the Work, taking into consideration the average climatic range and usual industrial conditions prevailing in this locality.

ARTICLE 4. CONTRACT PRICE.

4.1 Owner will pay Contractor for performance of the Work in accordance with the Contract Documents in current funds at the contract price agreed upon in the Contractor's Bid Form attached to this Contract which establishes the contract price as **Two Million, Three Hundred Fifty-Four Thousand, Three Hundred Fifty Dollars and Zero Cents ($2,354,350.00).**

ARTICLE 5. APPLICATIONS FOR PAYMENT

5.1 Contractor shall submit Applications for Payment in accordance with Part 15 General Specifications of the City's Engineering Regulations. Applications for Payment will be processed as provided in the Conditions of the Contract.

ARTICLE 6. PROGRESS AND FINAL PAYMENTS

6.1 Owner will make progress payments on account of the Contract Price on the basis of Contractor's Applications for Payment, monthly during construction as provided below. All progress payments will be

on the basis of the progress of the Work measured by the schedule of values provided for in the General Specifications.

6.2 Upon final inspection and acceptance of the Work, in accordance with Part 15 General Specifications, Owner will pay the remainder of the Contract Price.

ARTICLE 7. LIQUIDATED DAMAGES

7.1 Owner and Contractor recognize that time is of the essence of this Contract and that Owner will suffer financial loss if the Work is not completed within the Contract Time (and specific milestones) specified in Article 3 above, plus any extensions thereof allowed. They also recognize the delays, expense and difficulties involved in proving, in a legal proceeding, the actual loss suffered by Owner if the Work is not completed on time. Accordingly, instead of requiring any such proof, Owner and Contractor agree that as liquidated damages for delay (but not as a penalty) Contractor shall pay Owner **Three Hundred Fifty Dollars and Zero Cents ($350.00)** per day for each calendar day of delay until the work is complete.

7.2 This liquidated damages provision is non-exclusive and not intended to limit Owner's remedy for breach of this Contract or delay in Contract Times.

ARTICLE 8. ASSURANCE

8.1 Contractor has familiarized himself with the nature and extent of the Contract Documents, Work, locality, and with all local conditions and Federal, State and local laws, ordinances, rules and regulations that in any manner may affect cost, progress or performance of the Work.

8.2 Contractor has studied carefully all reports of investigations and tests of subsurface and latent physical conditions at the site or otherwise affecting cost, progress or performance of the Work that were relied upon by Engineer in the preparation of the Drawings and Specifications and which have been identified in Contract Documents.

8.3 Contractor has made or caused to be made examinations, investigations and tests and studies of such reports and related data [in addition to those referred to in the above paragraph] as Contractor deems necessary for the performance of the Work at the Contract Price within the Contract Time and in accordance with the other terms and conditions of the Contract Documents; and no additional examinations, investigations, tests, reports or similar data are or will be required for such purposes.

8.4 Contractor has correlated the results of all such observations, examinations, investigations, tests, reports and data with the terms and conditions of the Contract Documents.

8.5 Contractor has given Engineer written notice of any conflict, error or discrepancy that Contractor has discovered in the Contract Documents and the written resolution thereof by Engineer is acceptable to Contractor.

8.6 Contractor agrees that the Contract Documents are sufficient in scope and detail to indicate and convey understanding of all terms and conditions for performance of the Work.

ARTICLE 9. CONTRACT DOCUMENTS.

9.1 Contractor agrees, under the terms as stated in the Specifications and Contract Documents and at his/its/their own proper cost and expense, to furnish all the materials, supplies, machinery, equipment, tools superintendence, labor, insurance, and other accessories and services necessary to complete the said project in accordance with the conditions and prices stated in the Proposal, the Instructions to Bidders, the General Conditions of the Contract or General Specifications, the construction specifications, provisions

of the Contract Documents, the plans, which include all maps, plats, blue prints, and other drawings and printed or written explanatory matter thereof.

9.2 The Contract Documents that comprise the Contract between Owner and Contractor are attached hereto and made a part hereof and consist of the following:

9.2.1 Invitation To Bid.

9.2.2 Instructions To Bidders.

9.2.3 Bid Form.

9.2.4 This Contract.

9.2.5 Performance and Payment Bond.

9.2.6 Part 15 "General Specifications", Part 16 "Specification for Water Distribution System, Materials and Construction", Part 18 "Specifications for Roadway Improvements, Materials and Construction", Part 20 "Specifications for Sodding, Fertilizing and Seeding", all from the City of Columbia's Engineering Regulations, the Mentor Protégé Program (MPP) Guidelines and the MPP Implementation Plan.

9.2.7 Special Provisions for WM4403 and for WM4404.

9.2.8 Permits for WM4403 and for WM4404.

9.2.9 Drawings, numbered 1 through 11 for WM4403, inclusive and dated May 3, 2019 and drawings, numbered 1 through 15 for WM4404, inclusive and dated April 29, 2019.

9.2.10 Addenda numbers 1 dated August 26, 2019, inclusive.

9.2.11 Any modification, including Change Orders, duly delivered after execution of Contract.

ARTICLE 10. TERMINATION

The City shall, at its sole option and discretion, have the right to terminate this contract for any reason whatsoever by providing the Contractor with a notice of termination to be sent by registered mail, return receipt requested. Whenever the Contractor is terminated for convenience under this clause or is

wrongfully terminated under any other clause of this contract, the Contractor shall only be entitled to the actual direct costs of all labor and material expended on the job prior to the effective date of the termination plus 15% or the Contractor shall be entitled to be paid a pro-rate percentage of the total contract price which is equal to its percent of completion, whichever of the two methods provides the lowest sum to be paid to the Contractor. In no event shall the Contractor be entitled to anticipatory profit or damages for any termination under this clause. In no event shall the Contractor be entitled to assert a claim in quantum meruit or any other measure of damages other than that stated herein.

ARTICLE 11. MISCELLANEOUS

11.1 Terms used in this Contract that are defined in Part 15 General Specifications shall have the meanings assigned in the Conditions of the Contract.

11.2 Neither Owner nor Contractor shall, without the prior written consent of the other, assign or sublet in whole or in part any interest under any of the Contract Documents; and, specifically but without limitation, Contractor shall not assign any monies due or to become due without the prior written consent of Owner. In case Contractor assigns all or any part of any monies due or to become due und

Contract, the instrument of assignment shall contain a clause substantially to the effect that it is agreed that the right of the assignee in and to any monies due or to become due to Contractor shall be subject to prior claims of all persons, firms and corporations for services rendered or materials supplied for the performance of the Work called for in this Contract.

11.3 Owner and Contractor each binds himself, his partners, successors, assigns and legal representatives in respect to all covenants, Contracts and obligations contained in the Contract Documents.

11.4 The Contract Documents constitute the entire Contract between Owner and Contractor and may only be altered, amended or repealed by a Modification.

11.5 This Contract does not commit the City of Columbia to pay for any pre-bid costs. Any costs associated with IFB preparation, pre-bid conferences and any other activity prior to award of a contract shall be at the sole expense of the bidder(s). Rooms, meals, travel, telephone, data processing, administrative and clerical costs associated with the project shall be at the bidder's expense.

This Contract is subject to the final approval of Council and shall become effective on the date listed on the subsequent Notice to Proceed (NTP) and City of Columbia Purchase Order. The Contractor shall not perform work on or incur any costs associated with this contract prior to the commencement date listed on the Notice to Proceed and the City issued purchase order for work outlined herein. The City assumes no liability for any expenses incurred prior to the issuance of the NTP and purchase order.

Contractor
Carolina Tap & Bore Inc

BY Richard Young

(CORPORATE SEAL)

Attest Melissa J Cannon

Address for giving notices:
2430 Morningside Dr.
West Cola, SC
29169

Date: _____

Owner
City of Columbia, SC

BY _____

Teresa Wilson, City Manager

(CORPORATE SEAL)

Attest _____

Address for giving notices:

Department of Procurement and Contracts

1800 Main Street, 2nd Floor

Columbia, SC 29201

Date: _____

Note: If Contractor is a corporation, an affidavit giving the principal the right to sign the Contract must accompany the executed Contract.

APPROVED AS TO FORM

Legal Department City of Columbia, SC

Event Number	Bid012-19-20-DS Addendum 1	**Organization**	City of Columbia, SC
Event Title	Water Main Upgrades for Hollywood - Rose	**Workgroup**	Purchasing
Event Description	Full Detailed Information of Project's Procu	**Event Owner**	Debbie Scott
Event Type	IFBs	**Email**	Debbie.Scott@columbiasc.gov
Issue Date	7/29/2019 01:00:00 PM (ET)	**Phone**	
Close Date	8/28/2019 10:00:00 AM (ET)	**Fax**	

Responding Supplier	City	State	Response Submitted	Lines Responded	Response Total
Johnson Construction Contracto	Blythewood	SC	8/17/2019 05:12:19 PM (ET)	0	
Carolina Tap & Bore, Inc.	West Columbia	SC	8/28/2019 09:34:46 AM (ET)	1	$2,354,350.00
G H Smith Construction, Inc	Columbia	SC	8/28/2019 08:58:23 AM (ET)	1	$2,414,598.00
LAD Construction, LLC	Swansea	SC	8/28/2019 09:55:08 AM (ET)	1	$2,561,589.00
North American Pipeline Manag	Marietta	GA	8/28/2019 09:40:35 AM (ET)	1	$2,742,213.00

Please note: Lines Responded and Response Total only includes responses to specification. No alternate response data is included.

Scott, Debbie L

From: Winburn, David M
Sent: Tuesday, September 03, 2019 9:15 AM
To: Scott, Debbie L; Nelly, Juliet M
Cc: Porth, Gary B
Subject: RE: PROJECT: Bid#012-19-20-DS Hollywood - Rose Hill Subdivision (WM4403 & WM4404) MPP

Follow Up Flag: Follow up
Flag Status: Flagged

Categories: Red Category

The apparent low bidder is Carolina Tap & Bore, Inc. at $2,354,350.00. It is recommended that City Council accept the proposed bid and a 10% contingency for a total cost of $2,589,785.00.

Please let me know if you need any additional information. Thanks!

David

Columbia Water

We Are Columbia

David Winburn
Senior Civil Engineer

Columbia Water
Department of Engineering

PO Box 147 | Columbia, SC 29217
David.Winburn@ColumbiaSC.gov
Phone: (803) 376-3059
Cell: (803) 429-8702

ColumbiaSC.gov

From: Scott, Debbie L
Sent: Wednesday, August 28, 2019 3:55 PM
To: Nelly, Juliet M <Juliet.Nelly@columbiasc.gov>; Winburn, David M <David.Winburn@columbiasc.gov>
Cc: Porth, Gary B <Gary.Porth@columbiasc.gov>
Subject: PROJECT: Bid#012-19-20-DS Hollywood - Rose Hill Subdivision (WM4403 & WM4404) MPP
Importance: High

To: Compliance Division

Please see above attachments for compliance evaluation. Please sign off on Compliance Division Memorandum accordingly and return to me.

To: Project Manager -- David Winburn

Please see the Bid Analysis attachment for your review. Submit your Letter of Recommendation of contractor for Council Agenda Approval and please notate the **contractor's base amount, contingency and total.**

ATTACHMENTS:

- Bid Analysis
- Revised eBid Bid Tabulation
- Carolina Tap & Bore Proposal with MPP Bus.Imp.Plan
- Memorandum To Compliance for Review Sign Off Approval

Thank You

Debbie L. Scott
Construction Procurement Specialist
Department of Procurement & Contracts
803-545-3252 *Debbie.Scott@columbiasc.gov*
1800 Main Street Columbia SC 29201
PO Box 147 Columbia SC 29217

CITY OF COLUMBIA

INTER-OFFICE MEMORANDUM

TO: Juliet Nelly, Compliance Administrator

FROM: Debbie Scott, Procurement Contract Specialist,
Department of Procurement and Contracts

DATE: August 28, 2019

SUBJECT: BID#012-19-20-DS Hollywood – Rose Hill Subdivision WM4403 and WM4404

Bids for this project were opened publicly at 10:00 a.m., August 28, 2019 in the second floor Conference Room, 1800 Main Street.

The bids submitted for this project were in participation with the Mentor Protégé Program. The apparent *responsive* low bidder is Carolina Tap and Bore of West Columbia, SC at $2,354,350.00.

Please verify the percentages listed on the Business Information Record and check for consistency to the noted dollar amount. Upon completing your review, please sign below indicating that a compliance review has been made and return to me.

Thank You.

Juliet M Nelly

Juliet Nelly, Compliance Administrator

Date: 08/30/19

CITY OF COLUMBIA

We Are Columbia

Department of Utilities and Engineering
Compliance Division
P.O. Box 147 | Columbia, South Carolina 29217
Phone: 803-545-3049 Fax: 803-545-4130

MENTOR PROTÉGÉ PROGRAM
Implementation Plan

Date: 8/28/19

Project Number: WM4403 & WM4404

Mentor: Carolina Tap & Bore, Inc.

Project Name: HOLLYWOOD & ROSEHILL

Protégé: LG UTILITIES

Duration of the Project: 450 CONSEC.DA

Project Contract Amount: $2,354,894.00

Protégé Amount: $500,000.00

Statement of Commitment: Both Mentor and Protégé are committed to providing an adequate amount of resources and effort to execute the plan below. Mentor and Protégé acknowledge the Implementation Plan is a joint plan and agree to meet at least quarterly to verify compliance with this Plan.

1. How do the Mentor and Protégé intend to work together on the designated project? *Address contractual relationship, general roles and informal teaming arrangements.*

Both parties will provide manpower, equipment and purchase materials. The work will be segmented such that the mentor will be completely responsible for the piping installation in total along certain streets and the protégé will be completely responsible for the piping installation along his certain streets. Traffic control items will be provided by the Mentor for use by both

2. How will the specific, quantitative goals in the Annual Business Plan and MPP Agreement be implemented via the work on the project? *Address general goals here and specific goals in question 9.*

Obtaining a project from the city allows the parties to work together in a real world application. The protégés personal have the opportunity to work with city inspectors and have the assistance from well conditioned field people. The protégé will purchase materials which will provide the opportunity to increase their creditworthiness. The protégé will gain experience in

3. How will the team focus on developing protégé's business and implementing the actions necessary to obtain results reflected in the Mentor-Protégé Agreement? *Identify milestones, thresholds, or other indicators team that would indicate success is being achieved.*

The mentor and protégé team leaders will meet to discuss the portioning of the work; the identification, scheduling and purchasing of materials; payment planning and applications; equipment and personnel requirements; and establish date sensitive goals.

9. **Has anyone in your company been privy to any information regarding the Water Main Upgrades for Hollywood – Rose Hill Subdivision (WM4403 and WM4404) MPP solicitation prior to July 29, 2019? If so, please explain.**

No

10. **Prior to the solicitation release date on July 29, 2019, has anyone in your company attended any meetings, either internally or externally, where the above referenced solicitation was discussed either in whole or in part?**

No

Company Name: Carolina Tap & Bore, Inc.

By: Richard Young

Print Name: Richard Young

Title: President

Date: 08-20-2019

Subscribed and sworn to before me

this 20th **day of** August **, 20** 19

Krystal Young

(Notary Public)

My commission expires March 18th, 2025

CITY OF COLUMBIA

We Are Columbia

Department of Utilities and Engineering
Compliance Division
P.O. Box 147 | Columbia, South Carolina 29217
Phone: 803-545-3049 Fax: 803-545-4130

4. Proposed manpower and resources from both the Mentor and the Protégé is required for the project. *Address key personnel, equipment/materials, and insurance/bonding. Address special arrangements where applicable.*

Mentor:

The mentor will provide a skilled superintendent who is experienced in pipe installation.

Protégé:

The Protege will provide a the equipment & personnel to complete the task.

Subcontractors:

Special Arrangements:

5. What scope of work to be performed by each participant of the MPP team?

a. Description of Mentor's responsibilities:

The mentor will provide the bonding; accomplish his portion of the work; provide office and field guidance to the protégé; purchase materials; and make payment applications to the city.

b. Description of Protégé's responsibilities on project:

The protégé will accomplish his portion of the work; purchase materials; invoice Carolina Tap and Bore for work achieved;

c. Description of responsibilities that will be completed as a team:

Clean up, asphalt restoration and traffic control

6. What is the anticipated duration (in months) of each major phase of the project? During which phases will the Protégé be utilized?

The major phase will be installing the water main which would be approx. 12 months which the protege' will be utilized.

CITY OF COLUMBIA

We Are Columbia

Department of Utilities and Engineering
Compliance Division
P.O. Box 147 | Columbia, South Carolina 29217
Phone: 803-545-3049 Fax: 803-545-4130

7. **How will the team comply with and maintain the focus on the requirements of the program for the duration of the project?**

The lead field men will meet weekly to discuss the work to be accomplished and any specific requirements need to accomplish those goals. The team leaders will converse as needed to ensure that materials and equipment are available to maintain the work flow.

8. **What are the team's specific, quantitative goals and milestones for the current project?**

Obviously a primary goal was met by obtaining a project which provides work for the companies and their personnel. The protégé will improve his credit worthiness and knowledge of purchasing materials while gaining field experience for the protégés people. As projects are won & completed the Protege's reputation be enhanced.

9. **Outline of Regularly Scheduled meeting between Mentor and Protégé (Progress reporting).**

The mentor and protégé team leaders meet monthly to discuss payment applications; progress; problems; etc

10. **Define payment schedule and financial terms identifying milestones for initial, progress and final payments.**

Typically the protégé will invoice for the work that he has accomplished and the materials that he has purchased on a monthly basis. His billing will be included with the mentor's billing to the city. The funds will be distributed upon receipt from the city.

CITY OF COLUMBIA

Department of Utilities and Engineering
Compliance Division
P.O. Box 147 | Columbia, South Carolina 29217
Phone: 803-545-3049 Fax: 803-545-4130

11. List the Subcontractors that will be used on this project, as well as the information requested below: (The Subcontractor(s) listed below will NOT consist of your Protégé.)

Subcontractor's Name	Telephone	Address	Who will they report to?	Contract Amount	MPP, MBE, WBE, SBE	Percentage of Contract
NONE						

12. What percentage of the project is being implemented by the Protégé? Must equate to a minimum of 20% of total contract amount.

Protégé Contract Value: $500,000.00

Percentage of Contract: 21% (Minimum of 20% of total contract amount is required)

CITY OF COLUMBIA

We Are Columbia

Department of Utilities and Engineering
Compliance Division
P.O. Box 147 | Columbia, South Carolina 29217
Phone: 803-545-3049 Fax: 803-545-4130

MENTOR-PROTEGE IMPLEMENTATION PLAN SIGNATURE SHEET

IN WITNESS WHEREOF, the parties hereto have caused these presents to be executed by their proper officials thereunto duly authorized as of the dates below indicated:

EXECUTED by Carolina Tap & Bore, (Mentor Firm) this ~~20~~ 28 day of August 2019.
Corporate SEAL

By: Richard Young
Title: President

ATTEST:
By: Melba Cannon
Title: Corporate Secretary

EXECUTED by LG Utilities (Protégé Firm) this ~~20~~ 28 day of August, 2019.
Corporate SEAL
By: Susan B. Leitner
Title: President

ATTEST:
By: Krystal M. Young
Title: Administrative Assistant

RECOMMENDED FOR APPROVAL:

EXECUTED by the Department of Utilities & Engineering, Compliance Division on this 30 day of August, 2019.

By: Juliet McKelly
Title: Compliance Administrator

Business Information Record

The Bidder shall list all subcontractors and vendors, who will be providing subcontracting services, furnishing materials, etc. for this project. The list shall be submitted in the format provided below. Any proposed changes from the list shall be submitted in writing to the Owner prior to initiation of any action, with the reason for proposed changes.

MUST BE TYPED - "NO LINE STRIKE THROUGH"

Business Name & Address	Contact Name & Telephone	Services and / or Materials Provided	Cost of Services and / or Material ($ Value)	Percentage of Total Contract	MBE, WBE, SBE, DBE, LBE (indicate all that apply)	Is your Business CDBE Approved? Yes or No
Fortiline Waterworks 221 Laurel Road Lexington, SC 29073	Jason Rapp 803-600-5402	Materials	$500,00.00	21 %	N/A	
				%		
				%		
				%		
				%		

TOTAL: $ 500,000.00

I certify this information is true, correct, complete and active.

Business Name: Carolina Tap & Bore, Inc.

Representative Name / Title: Richard Young - PRESIDENT

Date: 8-28-2019

We Are Columbia

September 9, 2019

Boyd Stanley, Vice-President
Polydyne, Inc.
1 Chemical Plant Road
Riceboro, GA 31323

RE: Contract Extension, BID047-14-15

To Mr. Stanley,

The current awarded period on the above referenced contract expires on September 30, 2019. At this time, the City would like to extend this contract for two (2) months to terminate November 30, 2019, or until a new contract is awarded, whichever occurs first, at the price of $2,100.00 per ton of Polymer.

Any contract entered into by the City resulting from this renewal request shall be subject to cancellation without damages or further obligation when funds are not appropriated or otherwise made available to support the continuation of performance in any fiscal period.

This extension is subject to the approval by the City Manager, City Council for the City of Columbia and/or their authorized designee. If awarded, the maximum amount allowed for the renewal period shall not exceed the total amount approved and listed on the subsequent Purchase Order without prior approval from the City's Department of Procurement & Contracts.

Please annotate on the bottom of this letter, with your signature and date, as to whether you are interested or not in extending the contract for the period stated above with all terms and conditions to remain the same during this extension.

Also, please sign in blue ink, scan and email a copy of this signed letter back to our office no later than 5:00 PM on Friday, September 13, 2019. In addition, please mail the original signed version of this letter back to me while retaining a copy for your files.

I look forward to receiving your prompt response.

La'Toyia T. Davis

La'Toyia T. Davis, Buyer

Department of Procurement and Contracts
1800 Main Street, 2nd Floor
Columbia, SC 29201
Phone: 803-545-3470 Fax: 803-758-1013

I agree to extend the current contract (BID 047-14-15) for two (2) additional months from October 1, 2019 to November 30, 2019, or until a new contract is awarded, whichever occurs first. All other terms and conditions as outlined in BID 047-14-15 are applicable, fully enforceable and will remain unchanged.

X Yes _____ No

Boyd Stanley

Signature/ Date

Boyd Stanley, Vice-President

Printed Name of Signer/ Title

Comments: _____

Sandra A. Wright

Sandra A. Wright
Purchasing Agent Signature

9/12/19

Date

Teresa Wilson

Teresa B. Wilson
City Manager Signature

9/25/2019

Date

APPROVED AS TO FORM

Legal Department City of Columbia, SC

Department of Procurement and Contracts
1800 Main Street, 2nd Floor
Columbia, SC 29201
Phone: 803-545-3470 Fax: 803-758-1013

CITY OF COLUMBIA

Department of Procurement & Contracts
For Internal Use Only

We Are Columbia

PO Change/Modification Order Form

Contract Number:	
Procurement Officer:	
Phone:	803.545.3470
E-Mail Address:	
Address:	1800 Main St., 2nd Floor
	Columbia, SC 29201

Routing Date: 10 / 28 / 2019

Form must be completed for all requested changes/modifications greater than $100.00.

DESCRIPTION: PO Increase

DEPARTMENT NAME AND REQUESTOR: Utilities Metro WWTP; Nancy J.L Morris

CONTRACTOR'S NAME AND ADDRESS: Polydyne Inc.

PURCHASE ORDER NUMBER (if applicable): P178692 CHANGE ORDER # 1

TYPE OF CHANGE (check all applicable boxes):

☑ Purchase Order Increase

☐ Purchase Order Decrease

☐ Project Contingency Funds Utilized - Amount: $ _____

☐ Change to Contract Scope of Work

☐ Administrative Change to Contract (such as changes in paying office, name of Agency Contract Administrator, etc.)

☐ Other Change

Brief Explanation/Justification: PO Increase to cover invoice and extra money for two month extension. 11/30/19

Requested Amount of PO Increase/Decrease: $ 100,000.00 Current PO amount/total: $ 219,780.00

Accounting Information on Original PO: ORG 5516208 OBJ 624800 (Required)

Funding/Account Info for Change Order: ORG 5516208 OBJ 624800 (Required)

List any special instructions if transfers are needed from another account for this Change Order (Include ORG/OBJ codes):

Note: The appropriate Account Verifiers for each Department must review all change orders prior to routing for approvals.

Division/Department ($100.01 - $5,000):

Recommended for Approval: _____ (Signature) Superintendent (Title)

Assistant City Manager Approval ($5,000.01 – 25,000):

Recommended for Approval: _____ (Signature) Assistant City Manager (Title)

**Route this form to the Procurements & Contracts Department

Director of Procurement & Contracts Approval: City Manager Approval Needed (Yes) or No

Recommend for Approval: _____ (Signature) 10/29/19 (Date)

City Manager Approval:

Recommend for Approval: _____ (Signature) _____ (Date)

All change orders over $50,000.01 must be approved by City Council Date approved by City Council: _____

A copy of the final City Council minutes must be maintained with the purchasing file.

The agreement may be executed in one or more counterparts, all of which shall be considered one and the same agreement, and shall become a binding agreement when one or more counterparts have been signed by and delivered to each of the parties. Such delivery may occur by facsimile or email/pdf and any counterparts exchanged in this manner shall be considered originals.

INTERNAL PO Modification /CHANGE ORDER (COC 2/12/19 Updated) Form 0100

Requisition # R200610

JUSTIFICATION FOR SOLE SOURCE PROCUREMENT

Based upon the following determination, the proposed procurement action described below is being procured pursuant to the authority of Section 1.16 of the City of Columbia, S.C. Procurement Regulation.

This Department proposes to procure for the Metro- WWTP (1) Division,

Wastewater Treatment Chemical Magnesium Hydroxide-- Thipguard and Thioguard (2)

Omega S technical grade Magnesium Hydroxide Slurry Products

as a sole source procurement from Premier Magnesium, LLC. (3)

based upon the following justifications Premier Magnesium was the only company to (4)

respond to bid QPL 0021819- LTD.

This sole source is valid through June 30, 2020 Amount $ 849,204.00

Utilities Department	Signature of Department Head	9.18.19 Date
	Signature of Purchasing Agent	10/2/19 Date
Form must be route in the order of the signatures	Signature of Finance Director	10/4/2019 Date
	Signature of Asst. City Manager	10/08/19 Date
	Signature of City Manager	10-10-19 Date

Notes: (1) Enter Division Name
(2) Enter description of goods or services to be produced
(3) Enter name of sole source contractor
(4) Enter the basis of sole source procurement

Distribution: Original attached to requisition (Form PUR 108201) Copy retained in Department's file. (Rev. 07/2018)

This agreement may be executed in one or more counterparts, all of which shall be considered one and the same agreement, and shall become a binding agreement when one or more counterparts have been signed by and delivered to each of the parties. Such delivery may occur by facsimile or email/pdf and any counterparts exchanged in this manner shall be considered originals.

PREMIER
MAGNESIA, LLC

1275 Drummers Lane
Suite 102
Wayne, PA 19087
Tel: (610) 628-6929
Fax: (610) 628-8142
Email: sbecker@premiermagnesia.com

Friday, August 30, 2019

Mr Mike Foisy
Asst. Plant Superintendent
Columbia Metro WWTP
1200 Simmon Tree Lane
Columbia, SC 29217

Re: THIOGUARD® and THIOGUARD® Omega S technical grade magnesium hydroxide slurry products: Sole Source Contract for THIOGUARD®

Dear Mr. Foisy;

The following is a brief summary of the proprietary, patented and trade secret technology surrounding our THIOGUARD® and THIOGUARD® Omega S technical grade magnesium hydroxide slurry products. Premier invented this unique way to achieve superior alkalinity performance characteristics of high-quality magnesium hydroxide slurries with unique improvements to assist in many aspects of water treatment and resource recovery.

Innovative scientists and engineers with Premier were the first to discover and develop the controlled systemic application of reactive magnesium hydroxide in municipal wastewater systems. Trademarked THIOGUARD®, this discovery has since become the most trusted, widely used magnesia product to safely control hydrogen sulfide gas, organic odors, corrosion, total gas emissions, and FOG (fats, oils and grease) applied across the country.

More recently, Premier has developed practical and cost-effective new intellectual property that helps our customers with a range of treatment strategies that measurably improve conveyance efficiency, reduce total gas emissions, reduce biosolids, enhance nutrient and energy recovery and better meet federal discharge standards, while minimizing the occurrence of struvite scale. Proper application of this emerging technology solves many of the most vexing problems facing wastewater professionals today.

Methods involving the use of magnesium hydroxide in municipal wastewater collection systems for total gas production and emission, FOG accumulation, and in wastewater processes for divalent Mg, alkalinity and struvite control are protected under one or more claims contained in the following patents owned by Premier:

United States Patent No. 9,845,258; Dated: December 19, 2017; Titled: Compositions and Methods for Treating Wastewater;

United States Patent No. 10,160,674; Dated: December 25, 2018; Titled: Improving Wastewater Pumping and Conveying Efficiency;

United States Patent No.10,280,100; Dated: May 7, 2019: Titled: Compositions and Methods for Treating Wastewater; and

United States Patent No.10,287,198; Dated: May 14, 2019; Titled: Compositions and Methods for Treating Wastewater.

Copies of the above patents are available online through the USPTO or upon request from Premier.

Premier has spent a great deal of effort, research, time, trial and error, as well as significant funds, in order to obtain the patent rights described above and to develop a product of the quality that our customers require. We believe the efforts expended to obtain such patents is indicative of the effort our Company will put forward to ensure the City of Columbia SC will receive a competitive, efficient and high-quality product that will produce superior results.

I hope that this helps in your understanding of Premier's patent position with respect to our THIOGUARD® family of magnesium hydroxide products, however, if you wish to discuss this letter or have any questions please do not hesitate to contact me or your Premier Sales Representative.

Best regards,

Stephen A. Becker
Vice President, General Counsel & Secretary
Premier Magnesia, LLC

cc: P. Ahl
M. Madolora

Final Bid Submission Report for BID005-19-20-LTD Chemicals for Water & Wastewater Treatment Plants

Started: 10/8/2019 11:00 AM (EDT)

Ended: 10/8/2019 2:22 PM (EDT)

BID005-19-20-LTD Chemicals for Water & Wastewater Treatment Plants

Lot 1: Chlorine - per Specifications, Delivered - Price per TON

Rank	Company	Value	Date/Time
1	JCI Jones Chemicals	$519.00	10/8/2019 11:10:37 AM
2	Allied Universal Corporation	$520.00	10/8/2019 11:10:21 AM

Lot 2: Fluoride/Fluorosilicic Acid/Liquid - per Specifications, Delivered - Price per TON

Rank	Company	Value	Date/Time
1	Univar USA Inc.	$360.00	10/7/2019 11:06:27 AM

Lot 3: Anhydrous Ammonia - per Specifications, Delivered - Price per TON

Rank	Company	Value	Date/Time
1	Tanner Industries, Inc.	$1,440.00	10/7/2019 2:26:19 PM

Lot 4: Aluminum Sulfate - per Specifications, Delivered - Price per TON

Rank	Company	Value	Date/Time
1	Chemtrade Chemicals US LLC	$299.00	10/8/2019 11:00:36 AM
2	C and S Chemicals, Inc.	$299.50	10/4/2019 9:57:27 AM

Lot 5: Sodium Hydroxide/Caustic - per Specifications, Delivered - Price per TON

Rank	Company	Value	Date/Time
1	Univar USA Inc.	$474.00	10/8/2019 1:40:13 PM
2	JCI Jones Chemicals	$475.00	10/8/2019 1:38:44 PM

Lot 6: Liquid Lime (Calcium Hydroxide) - per Specifications, Delivered - Price per TON

Rank	Company	Value	Date/Time
1	Polytec, Inc	$320.00	10/7/2019 1:24:18 PM

Lot 7: Sodium Chlorite - per Specifications, Delivered - Price per TON

Rank	Company	Value	Date/Time
1	International Dioxcide	$1,065.00	10/8/2019 11:36:35 AM
2	Evoqua Water Technologies LLC	$1,067.00	10/8/2019 11:36:16 AM

Lot 8: Blended Phosphate/Corrosion Inhibitor - per Specifications, Delivered - Price per TON

Rank	Company	Value	Date/Time
1	Carus Corporation	$770.00	10/7/2019 7:48:41 AM

Lot 9: Activated Carbon (Powdered) - per Specifications, Delivered - Price per TON

Rank	Company	Value	Date/Time
1	Cabot Purification	$1,600.00	10/8/2019 1:27:50 PM
2	CarbPure Technologies, LLC - 880F	$1,601.00	10/8/2019 1:25:19 PM
3	Donau Carbon, formerly Standard Purification	$1,783.00	10/8/2019 11:24:24 AM
4	CarbPure Technologies, LLC	$1,797.00	10/7/2019 1:57:00 PM

Lot 10: Liquid Polymer/250 Gallon Tote - per Specifications, Delivered - Price per TON

Rank	Company	Value	Date/Time
1	Polydyne Inc.	$2,240.00	10/4/2019 3:56:00 PM

Lot 11: Sodium Chlorate/Purate (Liquid) - per Specifications, Delivered - Price per TON

Rank	Company	Value	Date/Time
1	International Dioxcide	$1,150.00	10/7/2019 11:10:52 AM

Lot 12: Liquid Sulfuric Acid 78% - per Specifications, Delivered - Price per TON

Rank	Company	Value	Date/Time
1	Southern States Chemical, Inc.	$200.00	10/7/2019 9:13:16 AM

Lot 13: Sodium Hypochlorite, 12% - per Specifications, Delivered - price per GALLON

Rank	Company	Value	Date/Time
1	JCI Jones Chemicals	$0.6000	10/8/2019 2:19:15 PM
2	Univar USA Inc.	$0.6018	10/8/2019 2:19:07 PM
3	Water Guard, Inc.	$0.6820	10/8/2019 11:31:01 AM

Lot 13: Sodium Hypochlorite, 15% - per Specifications, Delivered - price per GALLON

Rank	Company	Value	Date/Time
1	JCI Jones Chemicals	$0.6340	10/8/2019 1:19:41 PM
2	Univar USA Inc.	$0.6770	10/8/2019 1:23:34 PM
3	Water Guard, Inc.	$0.7820	10/8/2019 11:22:09 AM

Lot 14: Sodium Bisulfite - per Specifications, Delivered - Price per POUND

Rank	Company	Value	Date/Time
1	Southern Ionics Incorporated	$0.0920	10/8/2019 1:54:11 PM
2	JCI Jones Chemicals	$0.0940	10/8/2019 1:53:50 PM
3	PVS Chemical Solutions	$0.1300	10/8/2019 11:46:15 AM
4	Allied Universal Corporation	$0.1390	10/8/2019 11:30:33 AM

Lot 15: Liquid Polymer - per Specifications, Delivered - Price per POUND

Rank	Company	Value	Date/Time
1	Polydyne Inc.	$1.1200	10/4/2019 3:56:00 PM

We Are Columbia

Department of Procurement and Contracts
1800 Main Street, Columbia, SC 29201 · Phone 803-545-3470 · Fax 803-545-8752

INTER OFFICE MEMORANDUM

TO: Clint Shealy, Assistant City Manager, Columbia Water
Michael Foisy, WWTP Assistant Superintendent, Columbia Water MWWTP
Trey Varn, WTP Superintendent, Columbia Water Lake Murray WTP
Gordon Alexander, WTP Superintendent, Columbia Water Canal WTP

FROM: La'Toyia Davis, Buyer

SUBJECT: Bid 005-19-20-LTD Chemicals for Water and Wastewater Treatment Plants- Bid Tabulation Review and Approval

DATE: October 29, 2019

Please see the Final Bid Submission report from eBridge on the lowest responsive and responsible bid for each lot and give me your approval. After your approval is received it will be placed on Minute Traq for City Council's approval.

If the low bid for each lot is not accepted, you must provide justification as to why the bid does not meet the specification or your needs.

BID005-18-19-LTD bid tabulation and lowest responsive and responsible bid meets with my approval and I authorize it to go to City Council for approval.

Name: Michael Foisy (Print Name) Signature: Michael A. Foisy Date: 10/29/19

We Are Columbia

Department of Procurement and Contracts
1800 Main Street, Columbia, SC 29201 · Phone 803-545-3470 · Fax 803-545-8752

INTER OFFICE MEMORANDUM

TO: Clint Shealy, Assistant City Manager, Columbia Water
Michael Foisy, WWTP Assistant Superintendent, Columbia Water MWWTP
Trey Varn, WTP Superintendent, Columbia Water Lake Murray WTP
Gordon Alexander, WTP Superintendent, Columbia Water Canal WTP

FROM: La'Toyia Davis, Buyer

SUBJECT: Bid 005-19-20-LTD Chemicals for Water and Wastewater Treatment Plants- Bid Tabulation Review and Approval

DATE: October 29, 2019

Please see the Final Bid Submission report from eBridge on the lowest responsive and responsible bid for each lot and give me your approval. After your approval is received it will be placed on Minute Traq for City Council's approval.

If the low bid for each lot is not accepted, you must provide justification as to why the bid does not meet the specification or your needs.

BID005-18-19-LTD bid tabulation and lowest responsive and responsible bid meets with my approval and I authorize it to go to City Council for approval.

Name: Phil Miller (Print Name) Signature: _____ Date: 10-29-19

We Are Columbia

Department of Procurement and Contracts
1800 Main Street, Columbia, SC 29201 · Phone 803-545-3470 · Fax 803-545-8752

INTER OFFICE MEMORANDUM

TO: Clint Shealy, Assistant City Manager, Columbia Water
Michael Foisy, WWTP Assistant Superintendent, Columbia Water MWWTP
Trey Varn, WTP Superintendent, Columbia Water Lake Murray WTP
Gordon Alexander, WTP Superintendent, Columbia Water Canal WTP

FROM: La'Toyia Davis, Buyer

SUBJECT: Bid 005-19-20-LTD Chemicals for Water and Wastewater Treatment Plants- Bid Tabulation Review and Approval

DATE: October 29, 2019

Please see the Final Bid Submission report from eBridge on the lowest responsive and responsible bid for each lot and give me your approval. After your approval is received it will be placed on Minute Traq for City Council's approval.

If the low bid for each lot is not accepted, you must provide justification as to why the bid does not meet the specification or your needs.

BID005-18-19-LTD bid tabulation and lowest responsive and responsible bid meets with my approval and I authorize it to go to City Council for approval.

Name: Trey Varn (Print Name) Signature: _____ Date: 10/29/19

ORDINANCE NO.: 2019-084

Amending the 1998 Code of Ordinances of the City of Columbia, South Carolina, Chapter 20, Special Fees and Taxes, Article IV, Electronic Payment Fees, Sec. 20-102 Fee(s) imposed

BE IT ORDAINED by the Mayor and Council this __ day of _____, 2019, that the 1998 Code of Ordinances of The City of Columbia, South Carolina, Chapter 20, Special Fees and Taxes, Article IV, Electronic Payment Fees, Sec. 20-102 Fee(s) imposed is amended to read as follows:

Sec. 20-102. Fee(s) imposed.

(a) An electronic payment fee ~~shall~~ may be added to the amount due the City for the service provided for customers electing to pay their accounts by credit card, debit card or other electronic funds transfer. Such fee amount shall be equal to the amount charged by the provider of such payment service and shall be remitted to the provider.

(b) Dishonored electronic payments. A charge in the maximum amount permitted by South Carolina law shall be added to a customer's account for each chargeback ordered if payment is made by debit or credit card or other electronic funds transfer and subsequently dishonored.

This ordinance is effective as of final reading.

Requested by:

Assistant City Manager Palen

_____
MAYOR

Approved by:

_____
City Manager

Approved as to form:

_____
Deputy City Attorney

ATTEST:

_____
City Clerk

Introduced:
Final Reading:

DRAFT

Last revised: 10/1/2019
19003164

LEGAL DEPARTMENT DRAFT

RESOLUTION NO.: R-2019-095

Authorizing consumption of beer and wine only within Boyd Plaza adjacent to the Columbia Museum of Art for the CMA Live on Boyd Plaza on Sunday, December 8, 2019

WHEREAS, the Columbia Museum of Art is sponsoring the CMA Live on Boyd Plaza adjacent to the Museum on Sunday, December 8, 2019 from 2:00 p.m. until 5:30 p.m.; and,

WHEREAS, the Museum has requested permission for the temporary closing and use of the courtyard/plaza area adjacent to the Museum on Sunday, December 8, 2019 from 1:00 p.m. until 6:00 p.m. for set up, clean up, and staging of the event to be held on Sunday, December 8, 2019 from 2:00 p.m. until 5:30 p.m.; for patrons to consume beer and wine beverages only during the event hours on Sunday, December 8, 2019 from 2:00 p.m. until 5:00 p.m.; and for crowd control and overflow; and,

WHEREAS, it has been determined that such an event would be in the public interest; NOW, THEREFORE,

BE IT RESOLVED by the Mayor and Council this ___ day of _____, 2019, that the sale of beer and wine beverages only within the Courtyard area adjacent to the Columbia Museum of Art is authorized between the hours of 2:00 p.m. and 5:00 p.m. on Sunday, December 8, 2019; and,

BE IT FURTHER RESOLVED that all vendors be restricted to stationary location; and,

BE IT FURTHER RESOLVED that outdoor possession and consumption of beer and wine beverages, all outdoor musical performances and use of sound-amplifying devices shall end by 10:00 p.m. due to the proximity of the event to residential properties; and,

BE IT FURTHER RESOLVED that only pedestrian traffic will be allowed within the area. All other traffic, including, but not limited to, automobiles, trucks, motorcycles, mopeds, bicycles, skate boards, and horses, except police horses, is prohibited. All pets shall be prohibited. Coolers, glass bottles, breakable glasses and/or cups, large bags and backpacks shall be prohibited; and,

BE IT FURTHER RESOLVED that VIP tents or VIP areas within the event area are prohibited; and,

BE IT FURTHER RESOLVED that organizer is responsible or shall make arrangements for the cleanup of all trash and debris within the festival area and within the designated area of impact as shown on the attached drawing, and shall place same in the roll carts provided by the City. Any overflow of trash and debris shall be placed in garbage bags with the top securely closed and placed beside the City roll carts. The number of roll carts needed for the event shall be determined by organizer and the City Solid Waste Division prior to the event and placed throughout the event area to ensure that trash and debris are well contained. Roll carts and bagged trash and debris shall be returned to the collection point designated by the City in a timely manner. If the organizer has not opted to use City services to clean up the festival area and within the designated area of impact as shown on the attached drawing, any costs incurred by the City in removing loose trash and debris within the festival area and within the designated area of impact as shown on the attached drawing, which the organizer has failed to clean up, shall be billed to and paid by the organizer; and,

BE IT FURTHER RESOLVED that during the designated time the closed portion of the courtyard/plaza area adjacent to the Museum, with the exception of the parking areas, adjacent off-street parking areas and other areas posted as to not allow alcoholic beverages, shall be declared to be a Public Park and provisions of Chapter 15, Parks and Recreation, Sec. 15-1, 15-2 and 15-3, Code of Ordinances of the City of Columbia, South Carolina are in effect. Pursuant to Chapter 14, Offenses and Miscellaneous Provisions, Article IV, Offenses Against the Public Peace and Order, Sec. 14-99, 1998 Code of Ordinances of the City of Columbia, South Carolina, the

courtyard/plaza area adjacent to the Museum, with the exception of the parking areas, adjacent off-street parking areas and any other areas posted as to not allow alcoholic beverages, is deemed to be the site of a public festival at which beer and wine beverages only may be consumed and the prohibition against possession or consumption of alcoholic beverages set forth in Sec. 14-99 shall not apply. Possession and consumption of beer and wine beverages shall be permitted only in plastic cups, plastic or aluminum bottles or aluminum cans provided by vendors within the areas designated.

PROVIDED, FURTHER, that the event organizer shall provide the names and cell phone numbers of a least two contact persons who can receive complaints during the event, including any set up and breakdown times. The cell phones shall remain on at all times during the event and during any set up and breakdown time.

PROVIDED, FURTHER, that failure of the event organizer to strictly comply with the time frames and other requirements and responsibilities set forth in this resolution may result in a denial of subsequent requests to allow the event.

PROVIDED, HOWEVER, that no solicitation or transactions be made in violation of Sec. 14-32, 1998 Code of Ordinances of the City of Columbia, South Carolina.

BE IT FURTHER RESOLVED that in the event of inclement weather on Sunday, December 8, 2019, the City Manager is authorized to approve the rescheduling of the canceled event for another date within one (1) week from the date of the originally scheduled event upon receiving twenty-four (24) hours written notice requesting the rescheduling of the event. The hours of operation for the event, service of beer and wine only at the event and closing of streets for set up, clean up and crowd control of the event shall remain as outlined above.

BE IT FURTHER RESOLVED that should the organizer reschedule the event for another date beyond one (1) week from the date of the originally scheduled event, a request for a resolution of City Council approving the new date of the event shall be required.

Requested by:

Assistant City Manager Shealy

Approved by:

City Manager

Approved as to form:

City Attorney

Mayor

ATTEST:

City Clerk

Introduced:
Final Reading:

LEGAL DEPARTMENT DRAFT

DATE OF REQUEST: 10/9/19

REQUESTOR'S NAME/CONTACT INFORMATION (E-MAIL/ PHONE#/FAX#): Wilson Bame
803-343-2181
Wbame@columbiamuseum.org

EVENT NAME/PURPOSE (i.e., St. Patrick's/Charity Fund-raiser): Live on Boyd Plaza

DATE(S) OF EVENTS: December 8. 2019

LOCATION OF EVENT (i.e., Amphitheater area of Finlay Park; 1300 and 1400 blocks of Main Street between Lady Street and Hampton Street): Columbia Museum of Art
1515 Main St.
Columbia, SC 29201

STREET(S) OR PARK AREA TO BE CLOSED (i.e., 1300 and 1400 blocks of Main Street between Lady Street and Hampton Street; Amphitheater area of Finlay Park; Boyd Plaza): Boyd Plaza

HOURS FOR STREET(S) OR PARK AREA TO BE CLOSED (i.e., 5:00 p.m. - 12:00 a.m. ALLOW TIME FOR SET UP/CLEAN UP): 1:00pm - 6:00pm

HOURS OF EVENT (i.e., 6:00 p.m. - 10:00 p.m.)*: 2:00pm - 5:30pm

HOURS OF SERVICE OF BEER/WINE BEVERAGES ONLY (NO LIQUOR**) (Service should end one-half hour prior to end of event, i.e., event is 6-10 p.m., beer/wine service is 6-9:30 p.m.)*: 2:00pm - 5:00pm

Requests should be submitted by mail, e-mail or fax at least ***NINETY (90) days in advance of the event*** to allow for preparation and review of the Resolution and scheduling on Council's agenda. Requests may be sent by e-mail (slardis@columbiasc.net), fax (803-737-4250) or mailed to City Attorney's Office, ATTN: Shari Ardis, POB 667, Columbia, SC 29202. A draft Resolution will be prepared and forwarded for review to the event organizer, as well as to the City departments for coordination of City services and requirements (i.e., Police, Solid Waste, Parks and Recreation, etc.). Approval from the adjoining business/ property owners must be obtained before your request will be submitted to City Council if streets are to be closed off during business hours. The event organizer is responsible for obtaining a permit or license if required by the South Carolina Department of Revenue.

***Outdoor possession and consumption of beer and wine beverages only, all outdoor musical performances and use of sound-amplifying devices shall end by 10:00 p.m. due to the proximity of the event to residential properties.**

****With the exception of the parks listed in Sec. 15-1 Prohibited acts in parks (8), POSSESSION OF LIQUOR IS STRICTLY PROHIBITED. VIP tents or VIP areas for possession and consumption of alcoholic beverages or alcoholic liquors within the event area are prohibited.**

NOTE: **This form should only be used for public events where beer and/or wine are to be sold and consumed on City property** (i.e., Five After Five, St. Patrick's Festival, Concerts in Finlay Park, etc.).

This form **should not** be used to request use of City property for **private** events (birthday, retirement, anniversary parties, etc.) nor for sidewalk sales or neighborhood block parties. Requests for private events at City parks should be made through the Parks and Recreation Department. Requests for sidewalk sales should be made to the City Manager. Requests for street closings for private neighborhood block parties should be made to the Police Department Special Events and Public Safety.

Fire Marshal George N. Adams, Jr., 545-3703; 413-8553; cfdgadams@columbiasc.net
Legal Department - Shari Ardis; 737-4242; slardis@columbiasc.net - resolution preparation
Police Department Special Events - Officer Robert Hall; 545-3535; rjhall@columbiasc.net parade permit, police
Parks and Recreation - Loretta Coleman; 545-3100; peosborne@columbiasc.net park reservations
Police Department Community Services - Brenda Murphy; 545-3507; bmmurphy@columbiasc.net street closing

Last revised: 11/01/2013

Boyd Plaza Street Clean-up

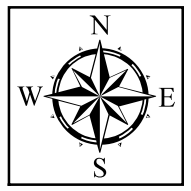

1600 ASSEMBLY ST

1600 MAIN ST

1100 TAYLOR ST

1000 TAYLOR ST

1500 MAIN ST

1500 SUMTER ST

1300 HAMPTON ST

1200 HAMPTON ST

1400 SUMTER ST

1500 ASSEMBLY ST

Boyd Plaza

1100 HAMPTON ST

1000 HAMPTON ST

1400 MAIN ST

1500 PARK ST

1400 ASSEMBLY ST

Both Sides of the Street

Legend

Boyd Plaza

Perimeter Clean-up Boundary

0 37.5 75 150 225 300 Feet

Document Path: W:\GIS\GIS_COC_Projects\Departments\Public_Works\Administration\20140519_Crawfish_jrtinsley\mxd\07132015_BoydPlaza.mxd

LEGAL DEPARTMENT DRAFT

RESOLUTION NO.: R-2019-103

Authorizing consumption of beer and wine only at First Thursday on Main Street

WHEREAS, First Thursday on Main ("Sponsor") is sponsoring First Thursday on Main in the 1200, 1300, 1400, 1500, 1600 and 1700 blocks of Main Street from Gervais Street to Laurel Street, from 6:00 p.m. until 10:00 p.m. on Thursdays, January 2, February 6, March 5, April 2, May 7, June 4, July 2, August 6, September 3, October 1, November 5 and December 3, 2020; and,

WHEREAS, Sponsor has requested permission for use of the 1200, 1300, 1400, 1500, 1600 and 1700 blocks of Main Street from Gervais Street to Laurel Street from 6:00 p.m. until 10:00 p.m. on Thursdays, January 2, February 6, March 5, April 2, May 7, June 4, July 2, August 6, September 3, October 1, November 5 and December 3, 2020, for patrons to consume beer and wine beverages only during the event hours of 6:00 p.m. until 9:30 p.m.; and for crowd control and overflow; and,

WHEREAS, it has been determined that such an event would be in the public interest; NOW, THEREFORE,

BE IT RESOLVED by the Mayor and Council this __ day of _____, 2019 that the sale of beer and wine beverages only is authorized between the hours of 6:00 p.m. and 9:30 p.m. on Thursdays, January 2, February 6, March 5, April 2, May 7, June 4, July 2, August 6, September 3, October 1, November 5 and December 3, 2020; and,

BE IT FURTHER RESOLVED that all vendors be restricted to stationary location; and,

BE IT FURTHER RESOLVED that possession and consumption of alcoholic liquors or alcoholic beverages other than beer and/or wine beverages within the event area is prohibited; and,

BE IT FURTHER RESOLVED that VIP tents or VIP areas for the possession and consumption of alcoholic liquors or alcoholic beverages, other than beer or wine beverages, within the event area are prohibited; and,

BE IT FURTHER RESOLVED that organizer is responsible or shall make arrangements for the cleanup of all trash and debris within the festival area and within the designated area of impact as shown on the attached drawing, and shall place same in the roll carts provided by the City. Any overflow of trash and debris shall be placed in garbage bags with the top securely closed and placed beside the City roll carts. The number of roll carts needed for the event shall be determined by organizer and the City Solid Waste Division prior to the event and placed throughout the event area to ensure that trash and debris are well contained. Roll carts and bagged trash and debris shall be returned to the collection point designated by the City in a timely manner. If the organizer has not opted to use City services to clean up the festival area and within the designated area of impact as shown on the attached drawing, any costs incurred by the City in removing loose trash and debris within the festival area and within the designated area of impact as shown on the attached drawing, which the organizer has failed to clean up, shall be billed to and paid by the organizer; and,

BE IT FURTHER RESOLVED that outdoor possession and consumption of beer and wine beverages, all outdoor musical performances and use of sound-amplifying devices shall end by 10:00 p.m. due to the proximity of the event to residential properties; and,

BE IT FURTHER RESOLVED that only pedestrian traffic will be allowed within the area. All other traffic, including, but not limited to, automobiles, trucks, motorcycles, mopeds, bicycles, skate boards, and horses, except police horses, is prohibited. All pets shall be prohibited. Coolers, glass bottles, breakable glasses and/or cups, large bags and backpacks shall be prohibited; and,

BE IT FURTHER RESOLVED that during the designated dates and times that the 1200, 1300, 1400, 1500, 1600, and 1700 blocks of Main Street from Gervais Street to Laurel Street, with the exception of the parking area and any other areas posted as to not allow alcoholic beverages, shall be declared to be a Public Park and provisions of Chapter 15, Parks and Recreation, Sec. 15-1, 15-2 and 15-3, Code of Ordinances of the City of Columbia, South Carolina are in effect. Pursuant to Chapter 14, Offenses and Miscellaneous Provisions, Article IV, Offenses Against the Public Peace and Order, Sec. 14-99, 1998 Code of Ordinances of the City of Columbia, South Carolina, 1200, 1300, 1400, 1500, 1600 and 1700, with the exception of the parking area and any other areas posted as to not allow alcoholic beverages, is deemed to be the site of a public festival at which beer and wine beverages only may be consumed and the prohibition against possession or consumption of alcoholic beverages set forth in Sec. 14-99 shall not apply. Possession and consumption of beer and wine

beverages shall be permitted only in plastic cups, plastic or aluminum bottles or aluminum cans provided by vendors within the areas designated.

PROVIDED, FURTHER, that the event organizer shall provide the names and cell phone numbers of a least two contact persons who can receive complaints during the event, including any set up and breakdown times. The cell phones shall remain on at all times during the event and during any set up and breakdown time.

PROVIDED, FURTHER, that failure of the event organizer to strictly comply with the time frames and other requirements and responsibilities set forth in this resolution may result in a denial of subsequent requests to allow the event.

PROVIDED, HOWEVER, that no solicitation or transactions be made in violation of Sec. 14-32, 1998 Code of Ordinances of the City of Columbia, South Carolina.

BE IT FURTHER RESOLVED that in the event of inclement weather on Thursdays, January 2, February 6, March 5, April 2, May 7, June 4, July 2, August 6, September 3, October 1, November 5 and December 3, 2020, the City Manager is authorized to approve the rescheduling of that event date for another date within one (1) week from the date of the originally scheduled event upon receiving twenty-four (24) hours written notice requesting the rescheduling of the event. The hours of operation for the event, service of beer and wine at the event and closing of streets for set up, clean up and crowd control of the event shall remain as outlined above.

BE IT FURTHER RESOLVED that should the organizer reschedule an event for another date beyond one (1) week from the date of the originally scheduled event, a request for a resolution of City Council approving the new date of the event shall be required.

Requested by:

Assistant City Manager Shealy

Approved by:

City Manager

Approved as to form:

Deputy City Attorney

Mayor

ATTEST:

City Clerk

Introduced:
Final Reading:

LEGAL DEPARTMENT DRAFT

1st Thursdays

N
W
E
S

We Are Columbia

ST
SUMTER ST
RICHLAND ST
LAUREL ST
BULL ST
BLANDING ST
MARION ST
TAYLOR ST
HAMPTON ST
ASSEMBLY ST
MAIN ST
WASHINGTON ST
PARK ST
GERVAIS ST

Both Sides of the Street

Legend

1st Thursdays

Perimeter Clean-up Boundary

0 125 250 500 750 1,000 Feet

Document Path: W:\GIS\GIS_COC_Projects\Departments\Public_Works\Administration\20140519_Crawfish_jrtinsley\mxd\02032015_Thursdays.mxd

EMPLOYEE OF THE MONTH
NOMINATION FORM

NAME OF NOMINATED EMPLOYEE: Colleen Foster

EMPLOYEE'S DEPARTMENT/DIVISION: Fire Department

Employee's Title: Executive Assistant Date of Hire: 9/24/2002

Name of Nominator: Chief Aubrey Jenkins Date: Oct. 17, 2019

Signatures of supervisor, division head, department head and if applicable, Assistant City Manager:

Name: _____ Title: Supervisor

Name: _____ Title: Division Head

Name: Chief Aubrey D. Jenkins Title: Department Head

Name: _____ Title: City Manager

Nominator should provide three other employees' names who may be contacted concerning the work of the nominated employee.

Name: Assistant Chief Mickey Folsom Division: Fire Admin

Name: Assistant Chief George Adams Division: Fire Prevention

Name: Assistant Chief James Helms Division: Fire HR

CRITERIA FOR BEING NOMINATED EMPLOYEE OF THE MONTH

RECEIVED
OCT 25 2019
HR/EMPLOYMENT

- The nominated employee must have been employed by the City of Columbia for at least one (1) full year.
- The nominated employee must have low absenteeism and tardiness.
- The nominated employee must have maintained and projected a positive attitude and a willingness to get along well with co-workers and the public.
- The nominated employee must have shown a willingness to perform any assigned duties in the highest standards possible and enhanced the department's ability to better serve the citizens of the City of Columbia.
- The nominated employee must have maintained a professional appearance and manner.
- The nominated employee must have demonstrated an allegiance to the City and be a team player who supports others' efforts to achieve the goals of the City of Columbia.
- The nominated employee should have earned the respect of co-workers.
- The nominated employee cannot hold a management position (i.e. ACM, Director, Administrator, Manager, Supervisor) and/or hold a position in which they supervise two (2) or more employees.
- Special considerations may be given to employees who participate in extracurricular activities that benefit the City of Columbia.

THE DETAILED NARRATIVE MUST CITE SPECIFIC EXAMPLES THAT DEMONSTRATE THE CRITERIA FOR NOMINATION OF THIS AWARD. NOMINATIONS RECEIVED THAT DO NOT MEET THE CRITERIA WILL NOT BE CONSIDERED.

Columbia Fire Department

www.columbiasc.net/fire

RECEIVED
OCT 25 2019
HR/EMPLOYMENT

October 18, 2019

Dear Nomination Committee,

I am writing this letter to nominate Mrs. Colleen Foster for the Employee of the Month for November 2019. She is an extraordinary employee, a huge asset to our department daily operations and is so deserving of this award and recognition.

Mrs. Foster is my Executive Assistant. She is directly responsible for managing my calendar, the department calendar, the executive staff annual leave time, take home vehicle mileages log, receiving department complaints and dissemination of complaints, and assisting with fire reports. In her 15 years of experience in the department, Mrs. Foster knowledge of the department is unparalleled. She seems to be a walking databank of knowledge when it comes to Fire-House reports and she loves to share her knowledge with anyone who will listen. She has consistently met established project deadlines and milestones.

Her customer service skills are exemplary. She is one of the friendliest and caring people I know and she always arrives early and has a happy greeting for her co-workers. Mrs. Foster also has an ability to communicate effectively with all of her co-workers, from the executive level to our entry level firefighter. She makes it a point to greet every employee and customer with compassion that walks into her office. Regularly, I can hear her on the phone with our citizens who may have issues or concerns and she makes sure that they are directed to the right channels and followed-up.

Despite the overwhelming amount of work that she has to do, she consistently finds ways to help her co-workers by answering their phone calls, as well as assisting them with their duties. She has also volunteered to coordinate all milestone celebrations for department such as retirement gathering, birthday gatherings, and much more.

Although she has had a big challenge in her life, she still constantly is that encouraging force to all those that come in contact with her. Her loyalty to the city, county and this department is without question. She is a direct image of what any employer would be proud to have as an employee. It is with great pleasure that I respectfully submit this nomination for Colleen Foster to be recognized as the City of Columbia November 2019 Employee of the Month.

Aubrey D. Jenkins,
Fire Chief

Aubrey D. Jenkins

City of Columbia / Fire Department
1800 Laurel Street / Columbia, SC 29201 / 803.545.3700 / Fax 803.733.8311

SODA CITY CERTIFIED APP

WWW.SODACITYCERTIFIED.COM

SODACITYCERTIFIED@GMAIL.COM

Khali Gallman, Soda City Certified App Creator
704.605.1020

What is Soda City Certified?

Soda City Certified is an app designed to encourage residents and tourists to explore Columbia, South Carolina aka Soda City. Columbia is famously known for its great food, warm weather, and burgeoning downtown districts. But there is so much more to explore!

Mission & Vision

We strive to:

- encourage exploration among residents and visitors of Columbia, South Carolina.
- support economic development of Columbia, South Carolina.
- foster professional and personal relationships

by promoting local events, restaurants, historical sites, monuments, and other entertainment attractions.

Download Soon

Download on the App Store

ANDROID APP ON Google play

What We Do

We partner with some of Columbia's most intriguing restaurants, historical sites, and attractions to list the top places to visit in 2020. Coupled with a few notable annual events, being Soda City Certified has its perks.

Why Columbia?

The Columbia metropolitan area is one of the south's fastest growing cities, with more than 700,000 population, according to the 2017 Census. A vibrant college town, approximately 50,000 students attend the local universities.

Tourism/Visitor Traffic

- 5.5 million overnight tourists
- 9.2 million day trip tourists
- $2.1 billion industry
- $107 million in state & local tax revenue generated from tourists
- $11+ million economic impact generated by 43 sports events; attracting 113,432 attendees

Source: Experience Columbia SC's annual report, 2016-17

App Highlights

Business

- *Consumer Frequency*

We can acknowledge every time an app user checks in to your establishment or event.

- *Buying Potential*

The likelihood of sales is increased when a potential consumer is within distance of your establishment.

- *Local Recognition*

We know that word of mouth remains the most significant form of marketing. However, recognition via our partnerships, website, social media, signage, press releases, push notifications, and other promotions are included in your participation of the app.

Consumer

- *Exploration*

Users will have the opportunity to learn more about Columbia, South Carolina by visiting specified events and venues.

- *Earn Money & Discounts*

Users receive points based on a GPS location tracker and can collect points toward being Soda City Certified. The top 3 users will receive $250.00 at the end of the year. Discounts at certain venues may be given at the company's discretion.

- *Local Recognition*

Users who visit all assigned locations for the year will receive a Soda City Certified medallion. They will also be recognized through various marketing sites, including, but not limited to: websites, eblasts, marketing partnerships, push notifications, banner advertisments, social media, etc.

Partner with Us!

We are looking for events, restaurants, historical sites, and government partnerships that want to increase their consumer frequency. We are also looking for companies that want more visibility to promote their [illegible]es on the app.

LEGAL DEPARTMENT DRAFT

ORDINANCE NO.: 2019-081

Consenting to the Inclusion of Property in a Multi-County Industrial/Business Park (North Main Senior, LLC, 3700 North Main Street and 3706 North Main Street, Richland County TMS Numbers 09209-20-04 and 09209-20-03)

WHEREAS, Richland County desires to enlarge the boundaries of a joint county industrial and business park (the "Park") of Richland and Fairfield Counties (together, the "Counties") created pursuant to that certain Amended and Restated Master Agreement Governing the I-77 Corridor Regional Industrial Park dated as of September 1, 2018, as amended, delivered pursuant to Section 4-1-170, Code of Laws of South Carolina 1976, as amended (the "Code"), in order to locate certain parcels of real property in Richland County therein; and

WHEREAS, the parcels described in the attached Exhibit A (the "Parcels") are located within the corporate limits of the City of Columbia (the "City") and are among the parcels of land that the Counties desire to include within the Park in accordance with the Infrastructure Credit Agreement attached hereto as Exhibit B; and,

WHEREAS, pursuant to Section 4-1-170(C) of the Code, the City must consent to the inclusion of the Parcels in the Park.

NOW, THEREFORE, BE IT ORDAINED by the Mayor and City Council this ___ day of _____, 2019, that the City hereby consents to the inclusion of the Property in the Park pursuant to all requirements of South Carolina law, including Section 4-1-170(C) of the Code.

The City Manager is authorized to execute any documents, and take any further action as may be reasonably necessary to further the intent of this Ordinance. Any prior ordinance, resolution or order, the terms of which are in conflict with this Ordinance, is, only to the extent of that conflict, repealed.

Requested by:

Assistant City Manager Gentry

Approved by:

City Manager

Mayor

Approved as to form:

City Attorney

ATTEST:

City Clerk

First Reading:
Second Reading:

ORDINANCE NO.: 2019-081
EXHIBIT A
DESCRIPTION OF PROPERTY

The following real property located in Columbia, Richland County, South Carolina more particularly described as:

All those certain pieces, parcels or lots of land with the improvements thereon, situate, lying and being in the City of Columbia, County of Richland, State of South Carolina, being shown as Parcel "A" containing 1.01 acres, Parcel "B", containing 0.25 acres, Parcel "C", containing 0.19 acre, Parcel "D", containing 0.28 acre, and Parcel "E", containing 0.14 acres, on that certain Plat prepared for Eau Claire Development Corporation by Jay S. Joshi, PLS, dated July 30, 2001 and recorded in the Office of Register of Deeds for Richland County, South Carolina in Book 550, at page 2265.

LESS AND EXCEPT THE FOLLOWING PROPERTIES:

a) That certain 110.19 square feet conveyed to Richland County, South Carolina by deed dated May 26, 2015 and recorded July 8, 2015 in the Office of Register of Deeds for Richland County, South Carolina in Book 2041, at page 1600; and,

b) That certain 194.66 square feet conveyed to Richland County, South Carolina by deed dated May 26, 2015 and recorded July 8, 2015 in the Office of Register of Deeds for Richland County, South Carolina in Book 2041, at page 1588.

MORE PARTICULARLY DESCRIBED AS FOLLOWS:

BEGINNING AT A POINT LOCATED ON THE EASTERN RIGHT OF WAY OF MAIN STREET (U.S. HWY. 21) AT THE NORTHWESTERN END OF A MITERED CORNER MARKING THE INTERSECTION OF SAID EASTERN RIGHT OF WAY OF MAIN STREET (U.S. HWY 21) AND THE NORTHERN RIGHT OF WAY OF MILLER AVENUE, SAID POINT ALSO BEING LOCATED N 15-51-27 E 15.00 FEET FROM AN IRON PIN OLD 3/4" OPEN TOP LOCATED AT THE INTERSECTION OF SAID RIGHTS OF WAY IF EXTENDED; THENCE RUNNING ALONG SAID EASTERN RIGHT OF WAY OF MAIN STREET (U.S. HWY. 21) N 15-51-27 E 144.55 FEET TO AN IRON PIN OLD 1/2" REBAR; THENCE N 15-38-03 E 156.89 FEET TO POINT LOCATED AT THE SOUTHWESTERN END OF A MITERED CORNER MARKING THE INTERSECTION OF THE EASTERN RIGHT OF WAY OF MAIN STREET (U.S. HWY 21) AND THE SOUTHERN RIGHT OF WAY OF ELMORE STREET; THENCE TURNING AND LEAVING SAID EASTERN RIGHT OF WAY AND RUNNING ALONG SAID MITERED CORNER N 54-44-45 E 31.04 FEET TO A POINT LOCATED AT THE NORTHEASTERN END OF SAID MITERED CORNER, SAID POINT BEING LOCATED ON THE SOUTHERN RIGHT OF WAY OF ELMORE STREET; THENCE TURNING AND RUNNING WITH SAID SOUTHERN RIGHT OF WAY S 86-08-32 E 139.18 FEET TO AN IRON PIN OLD 1-1/2" OPEN TOP; THENCE S 87-41-46 E 64.88 FEET TO IRON PIN OLD 1/2" REBAR AT THE JOINT CORNER OF FJ TUCKER PROPERTY, NOW OR FORMERLY; THENCE TURNING AND LEAVING SAID SOUTHERN RIGHT OF WAY AND RUNNING WITH THE COMMON LINES OF THE TUCKER PROPERTY S 15-07-21 W 122.01 FEET TO AN IRON PIN OLD 1/2" REBAR; THENCE S 15-13-29 W 50.06 FEET TO IRON PIN OLD 1/2" REBAR; THENCE S 87-41-55 E 25.38 TO AN IRON PIN OLD 1/2" REBAR AT THE JOINT CORNER OF 1216 MILLER LLC PROPERTY, NOW OR FORMERLY; THENCE TURNING AND RUNNING WITH THE COMMON LINE OF SAID 1216 MILLER LLC PROPERTY S 00-37-38 W 164.18 FEET TO AN IRON PIN OLD 1/2" REBAR (BENT) LOCATED ON THE NORTHERN RIGHT OF WAY OF MILLER AVENUE, CROSSING OVER AN IRON PIN OLD 1" OPEN TOP AT 161.45 FEET; THENCE TURNING AND RUNNING ALONG SAID NORTHERN RIGHT OF WAY N 85-57-12 W 279.24 FEET TO A POINT LOCATED AT THE SOUTHEASTERN END OF A MITERED CORNER MARKING THE INTERSECTION OF SAID NORTHERN RIGHT OF WAY OF MILLER AVENUE AND THE EASTERN RIGHT OF WAY OF MAIN STREET (U.S. HWY. 21); THENCE LEAVING THE NORTHERN RIGHT OF WAY OF MILLER AVENUE AND RUNNING ALONG SAID MITERED CORNER N 36-02-52 W 18.92 FEET TO THE POINT AND PLACE OF BEGINNING.

ORDINANCE NO.: 2019-081
EXHIBIT B
INFRASTRUCTURE CREDIT AGREEMENT

INFRASTRUCTURE CREDIT AGREEMENT

by and between

RICHLAND COUNTY, SOUTH CAROLINA

and

NORTH MAIN SENIOR, LLC, a South Carolina limited liability company

Effective as of: June 18, 2019

INFRASTRUCTURE CREDIT AGREEMENT

This INFRASTRUCTURE CREDIT AGREEMENT, effective as of June 18, 2019 ("Agreement"), is by and between RICHLAND COUNTY, SOUTH CAROLINA, a body politic and corporate, and a political subdivision of the State of South Carolina ("County"), and NORTH MAIN SENIOR, LLC, a South Carolina limited liability company ("Company" together with the County, "Parties," each, a "Party").

W I T N E S S E T H :

WHEREAS, the County, acting by and through its County Council ("County Council"), is authorized and empowered under and pursuant to the provisions of Article VIII, Section 13(D) of the South Carolina Constitution and the provisions of Title 4, Chapter 1 of the Code of Laws of South Carolina, 1976, as amended (collectively, "Act"), to (i) develop multicounty parks with counties having contiguous borders with the County; and (ii) include property in the multicounty park, which inclusion under the terms of the Act (A) makes such property exempt from *ad valorem* property taxes, and (B) changes the character of the annual receipts from such property to fees-in-lieu of *ad valorem* property taxes in an amount equal to the *ad valorem* taxes that would have been due and payable but for the location of the property in such multicounty park ("Fee Payments");

WHEREAS, the County is further authorized by Section 4-1-175 of the Act to grant credits against Fee Payments ("Infrastructure Credit") to pay costs of designing, acquiring, constructing, improving or expanding (i) infrastructure serving a project or the County and (ii) improved and unimproved real estate and personal property used in the operation of a commercial enterprise or manufacturing facility (collectively, "Infrastructure");

WHEREAS, pursuant to the authority provided in the Act, the County has developed with Fairfield County, South Carolina, the I-77 Corridor Regional Industrial Park ("Park") and executed the "Amended and Restated Master Agreement Governing the I-77 Corridor Regional Industrial Park" dated September 1, 2018 ("Park Agreement"), which governs the operation of the Park;

WHEREAS, the Company with the sponsorship and involvement of the Columbia Empowerment Zone, Inc. through its wholly owned subsidiary The Veranda at North Main, LLC (a co-managing member of the Company) has committed to establish a low-income rental housing project for seniors in the County ("Project") on property more particularly identified by Exhibit A ("Land"), consisting of a total investment of greater than $10,000,000, of which $7,000,000 is a taxable investment in real and personal property;

WHEREAS, the Project is encumbered by an Agreement as to Restrictive Covenants between the South Carolina State Housing Finance and Development Authority ("State Housing") and the Company dated December 27, 2017 ("Restrictive Covenants") pursuant to which the Company will agree that at least 40% of the completed dwelling units in the Project will be rented continuously to individuals or families whose total aggregate income at the time of initial occupancy does not exceed 60% of the area median gross income as computed by HUD at rents not in excess of the fair market rent as determined by HUD ("Low Income Rental Restrictions"); and

WHEREAS, by an ordinance enacted on June 18, 2019 ("Ordinance"), the County authorized the expansion of the boundaries of the Park and an amendment to the Park Agreement to include the Land and other real and personal property relating to the Project ("Property") in the Park; and

WHEREAS, pursuant to the Ordinance, the County further authorized the execution and delivery of this Agreement to provide Infrastructure Credits against the Company's Fee Payments with respect to the Project for the purpose of assisting in paying the costs of certain Infrastructure, subject to the terms and conditions below.

NOW, THEREFORE, in consideration of the respective representations and agreements hereinafter contained, the County and the Company agree as follows:

ARTICLE I
REPRESENTATIONS

Section 1.1. ***Representations by the County.*** The County represents to the Company as follows:

(a) The County is a body politic and corporate and a political subdivision of the State of South Carolina;

(b) The County is authorized and empowered by the provisions of the Act to enter into and carry out its obligations under this Agreement;

(c) The County has duly authorized and approved the execution and delivery of this Agreement by adoption of the Ordinance in accordance with the procedural requirements of the Act and any other applicable state law;

(d) The County is not in default of any of its obligations (contractual or otherwise) as a result of entering into and performing its obligations under this Agreement;

(e) The County has approved the inclusion of the Property in the Park; and

(f) Based on representations made by the Company to the County, the County has determined the Project and the Infrastructure will enhance the economic development of the County. Therefore, the County is entering into this Agreement for the purpose of promoting the economic development of the County.

Section 1.2. ***Representations by the Company.*** The Company represents to the County as follows:

(a) The Company is in good standing under the laws of the State of South Carolina, has power to conduct business in the State of South Carolina and enter into this Agreement, and by proper company action has authorized the officials signing this Agreement to execute and deliver it;

(b) The Company will comply with the Restrictive Covenants and will use commercially reasonable efforts to provide low-income housing at the Project for the balance of the units;

(c) The Company will use commercially reasonable efforts to achieve the Company Commitment, as defined below; and

(c) The Company's execution and delivery of this Agreement, and its compliance with the provisions of this Agreement do not result in a default under any agreement or instrument to which the Company is now a party or by which it is bound.

ARTICLE II
INFRASTRUCTURE CREDITS

Section 2.1. ***Company Commitment.*** The Company shall invest not less than $10,000,000 in the Project, of which $7,000,000 shall consist of taxable property, to acquire, construct, furnish and equip the Project ("Company Commitment") by the Certification Date, as defined below. The Company shall certify to the County completion of the Project by no later than December 31, 2019 ("Certification Date"), by providing documentation to the County sufficient to reflect completion of the Project. If the Company fails to achieve and certify the Company Commitment by the Certification Date, the County may terminate this Agreement and, on termination, the Company is no longer entitled to any further benefits under this Agreement. In the event of a default of the Company under the Restrictive Covenants, the Company is subject to the clawback requirements set forth in Section 2.3 below.

Section 2.2. ***Infrastructure Credits.***

(a) To assist in paying for costs of Infrastructure, the County shall provide an Infrastructure Credit against certain of the Company's Fee Payments due with respect to the Project. The term, amount and calculation of the Infrastructure Credit is described in Exhibit B.

(b) For each property tax year in which the Company is entitled to an Infrastructure Credit ("Credit Term"), the County shall prepare and issue the Company's annual property tax bill with respect to the Project net of the Infrastructure Credit set forth in Section 2.2(a) ("Net Fee Payment"). Following receipt of the annual bill, the Company shall timely remit the Net Fee Payment to the County in accordance with applicable law.

(c) THIS AGREEMENT AND THE INFRASTRUCTURE CREDITS PROVIDED BY THIS AGREEMENT ARE LIMITED OBLIGATIONS OF THE COUNTY. THE INFRASTRUCTURE CREDITS ARE DERIVED SOLELY FROM AND TO THE EXTENT OF THE FEE PAYMENTS MADE BY THE COMPANY TO THE COUNTY PURSUANT TO THE ACT AND THE PARK AGREEMENT. THE INFRASTRUCTURE CREDITS DO NOT AND SHALL NOT CONSTITUTE A GENERAL OBLIGATION OF THE COUNTY OR ANY MUNICIPALITY WITHIN THE MEANING OF ANY CONSTITUTIONAL OR STATUTORY LIMITATION AND DO NOT AND SHALL NOT CONSTITUTE OR GIVE RISE TO A PECUNIARY LIABILITY OF THE COUNTY OR ANY MUNICIPALITY OR A CHARGE AGAINST THE GENERAL CREDIT OR TAXING POWER OF THE COUNTY OR ANY MUNICIPALITY. THE FULL FAITH, CREDIT, AND TAXING POWER OF THE COUNTY OR ANY MUNICIPALITY ARE NOT PLEDGED FOR THE PROVISION OF THE INFRASTRUCTURE CREDITS.

Section 2.3. ***Clawback.*** In the event of a default of the Company under the Restrictive Covenants (after the expiration of any notice or remedial period contained thereunder) resulting from the Company's failure to satisfy the Low Income Rental Restrictions for any calendar year, the Company shall repay the Infrastructure Credits received for such year. The portion of the Infrastructure Credit to be repaid ("Repayment Amount") is based on the percentage of the occupied dwelling units in the Project which failed to satisfy the Low Income Rental Restrictions divided by the total number of occupied dwelling units in the Project for the prior calendar year, calculated as follows:

Repayment Amount = Total Received x Clawback Percentage

Clawback Percentage = 100% - Low Income Rental Percentage

Low Income Rental Percentage = Number Of Occupied Dwelling Units Which Failed To Satisfy the Low Income Rental Restrictions Divided By The Total Number Of Occupied Dwelling Units in the Project Subject to the Low Income Rental Restrictions For the Prior Calendar Year.

For example, and by way of example only, if the Company had received $500,000 in Infrastructure Credits, the Project contained 24 occupied dwelling units subject to The Low Income Rental Restrictions in any year and an event of default under the Restrictive Covenants had occurred due to the failure of the Company to satisfy the Low Income Rental Restrictions as to 8 occupied dwelling units in that calendar year, the Repayment Amount would be calculated as follows:

Low Income Rental Percentage = 8/24 = 33.33%

Clawback Percentage = 100% - 33.33% = 66.66%

Repayment Amount = $500,000 x 66.66% = $33,330

All percentages will be rounded to the nearest two decimal places. The Company shall prepare and return the Credit Certificate, attached hereto as Exhibit C ("Credit Certificate"), within 60 days of receiving the Annual Bill certifying that the Company satisfied the Low Income Rental Restrictions or certifying that an event of default occurred under the Restrictive Covenants due to the Company's failure to satisfy the Low income Rental Restrictions. The Credit Certificate shall calculate and set forth the Repayment Amount for the prior calendar year, if any, and the Company shall remit the Repayment Amount along with the Credit Certificate. If not timely paid, the Repayment Amount is subject to the minimum amount of interest that South Carolina law may permit with respect to delinquent *ad valorem* tax payments. The repayment obligation arising under this Section survives termination of this Agreement.

Section 2.4. ***Filings.*** To assist the County in administering the Infrastructure Credits, the Company shall, for the Credit Term, prepare and file a separate schedule to the SCDOR PT-100, PT-300 with respect to the Property.

Section 2.5 ***Cumulative Infrastructure Credit.*** The cumulative dollar amount expended by the Company on Infrastructure shall equal or exceed the cumulative dollar amount of all the Infrastructure Credits received by the Company.

Section 2.6. ***Termination Upon Receipt of Statutory Exemption.*** If the South Carolina law provides that the Project qualifies for an exemption under South Carolina law, the Company shall be required to diligently pursue such exemption. This Agreement shall automatically terminate if the Project is determined to be exempt from ad valorem property taxes under South Carolina law.

ARTICLE III
DEFAULTS AND REMEDIES

Section 3.1. ***Events of Default.*** The following are "Events of Default" under this Fee Agreement:

(a) Failure by the Company to make a Net Fee Payment, which failure has not been cured within 30 days following receipt of written notice from the County specifying the delinquency in payment and requesting that it be remedied;

(b) A Cessation of Operations. For purposes of this Agreement, a "Cessation of Operations means closure of the Project for a continuous period of twelve (12) months or an event of default under the Restrictive Covenants, in which the Company fails to meet the Low Income Rental Restrictions for a period of 12 months;

(c) A representation or warranty made by the Company which is deemed materially incorrect when deemed made;

(d) Failure by the Company to perform any of the terms, conditions, obligations, or covenants under this Agreement (other than those described in Section 2.1 under (a) above), which failure has not been cured within 30 days after written notice from the County to the Company specifying such failure and requesting that it be remedied, unless the Company has instituted corrective action within the 30-day period and is diligently pursuing corrective action until the default is corrected, in which case the 30-day period is extended to include the period during which the Company is diligently pursuing corrective action;

(e) A representation or warranty made by the County which is deemed materially incorrect when deemed made; or

(f) Failure by the County to perform any of the terms, conditions, obligations, or covenants hereunder, which failure has not been cured within 30 days after written notice from the Company to the County specifying such failure and requesting that it be remedied, unless the County has instituted corrective action within the 30-day period and is diligently pursuing corrective action until the default is corrected, in which case the 30-day period is extended to include the period during which the County is diligently pursuing corrective action.

Section 3.2. ***Remedies on Default.***

(a) If an Event of Default by the Company has occurred and is continuing, then the County may take any one or more of the following remedial actions:

(i) terminate the Agreement; or

(ii) take whatever action at law or in equity may appear necessary or desirable to collect amounts due or otherwise remedy the Event of Default or recover its damages.

(b) If an Event of Default by the County has occurred and is continuing, the Company may take one or more of the following actions:

(i) bring an action for specific enforcement;

(ii) terminate the Agreement; or

(iii) in case of a materially incorrect representation or warranty, take such action as is appropriate, including legal action, to recover its damages, to the extent allowed by law.

Section 3.3. ***Reimbursement of Legal Fees and Other Expenses.*** On the occurrence of an Event of Default, if a Party is required to employ attorneys or incur other reasonable expenses for the collection of payments due under this Agreement or for the enforcement of performance or observance of any obligation or agreement, the prevailing Party is entitled to seek reimbursement of the reasonable fees of such attorneys and such other reasonable expenses so incurred.

Section 3.4. ***Remedies Not Exclusive.*** No remedy described in this Agreement is intended to be exclusive of any other remedy or remedies, and each and every such remedy is cumulative and in addition to every other remedy given under this Agreement or existing at law or in equity or by statute.

Section 3.5. ***Nonwaiver.*** A delay or omission by the Company or County to exercise any right or power accruing on an Event of Default does not waive such right or power and is not deemed to be a waiver or acquiescence of the Event of Default. Every power and remedy given to the Company or County by this Agreement may be exercised from time to time and as often as may be deemed expedient.

ARTICLE IV
MISCELLANEOUS

Section 4.1. ***Examination of Records; Confidentiality.***

(a) The County and its authorized agents, at any reasonable time on prior notice, may enter and examine the Project and have access to and examine the Company's books and records relating to the Project for the purposes of (i) identifying the Project; (ii) confirming achievement of the Investment Commitment; and (iii) permitting the County to carry out its duties and obligations in its sovereign capacity (such as, without limitation, for such routine health and safety purposes as would be applied to any other manufacturing or commercial facility in the County).

(b) The County acknowledges that the Company may utilize confidential and proprietary processes and materials, services, equipment, trade secrets, and techniques ("Confidential Information") and that disclosure of the Confidential Information could result in substantial economic harm to the Company. The Company may clearly label any Confidential Information delivered to the County pursuant to this Agreement as "Confidential Information." Except as required by law, the County, or any employee, agent, or contractor of the County, shall not disclose or otherwise divulge any labeled Confidential Information to any other person, firm, governmental body or agency. The Company acknowledges that the County is subject to the South Carolina Freedom of Information Act, and, as a result, must disclose certain documents and information on request, absent an exemption. If the County is required to disclose any Confidential Information to a third party, the County will use its best efforts to provide the Company with as much advance notice as is reasonably possible of such disclosure requirement prior to making such disclosure and to cooperate reasonably with any attempts by the Company to obtain judicial or other relief from such disclosure requirement.

Section 4.2. ***Assignment.*** The Company may assign or otherwise transfer any of its rights and interest in this Agreement on prior written consent of the County, which may be given by resolution, and which consent will not be unreasonably withheld.

Section 4.3. ***Provisions of Agreement for Sole Benefit of County and Company.*** Except as otherwise specifically provided in this Agreement, nothing in this Agreement expressed or implied confers on any person or entity other than the County and the Company any right, remedy, or claim under or by reason of this Agreement, this Agreement being intended to be for the sole and exclusive benefit of the County and the Company.

Section 4.4. ***Severability.*** If any provision of this Agreement is declared illegal, invalid, or unenforceable for any reason, the remaining provisions of this Agreement are unimpaired, and the Parties shall reform such illegal, invalid, or unenforceable provision to effectuate most closely the legal, valid, and enforceable intent of this Agreement.

Section 4.5. ***Limitation of Liability.***

(a) The County is not liable to the Company for any costs, expenses, losses, damages, claims or actions in connection with this Agreement, except from amounts received by the County from the Company under this Agreement.

(b) All covenants, stipulations, promises, agreements and obligations of the County contained in this Agreement are binding on members of the County Council or any elected official, officer, agent, servant or employee of the County only in his or her official capacity and not in his or her individual capacity, and no recourse for the payment of any moneys or performance of any of the covenants and agreements under this Agreement or for any claims based on this Agreement may be had against any member of County Council or any elected official, officer, agent, servant or employee of the County except solely in their official capacity.

Section 4.6. ***Indemnification Covenant.***

(a) Except as provided in paragraph (d) below, the Company shall indemnify and save the County, its employees, elected officials, officers and agents (each, an "Indemnified Party") harmless against and from all liability or claims arising from the County's execution of this Agreement, performance of the County's obligations under this Agreement or the administration of its duties pursuant to this Agreement, or otherwise by virtue of the County having entered into this Agreement.

(b) The County is entitled to use counsel of its choice and the Company shall reimburse the County for all of its costs, including attorneys' fees, incurred in connection with the response to or defense against such liability or claims as described in paragraph (a) above. The County shall provide a statement of the costs incurred in the response or defense, and the Company shall pay the County within 30 days of receipt of the statement. The Company may request reasonable documentation evidencing the costs shown on the statement. However, the County is not required to provide any documentation which may be privileged or confidential to evidence the costs.

(c) The County may request the Company to resist or defend against any claim on behalf of an Indemnified Party. On such request, the Company shall resist or defend against such claim on behalf of the Indemnified Party, at the Company's expense. The Company is entitled to use counsel of its choice, manage and control the defense of or response to such claim for the Indemnified Party; provided the Company is not entitled to settle any such claim without the consent of that Indemnified Party.

(d) Notwithstanding anything herein to the contrary, the Company is not required to indemnify any Indemnified Party against or reimburse the County for costs arising from any claim or liability (i) occasioned by the acts of that Indemnified Party, which are unrelated to the execution of this Agreement, performance of the County's obligations under this Agreement, or the administration of its

duties under this Agreement, or otherwise by virtue of the County having entered into this Agreement; or (ii) resulting from that Indemnified Party's own negligence, bad faith, fraud, deceit, or willful misconduct.

(e) An Indemnified Party may not avail itself of the indemnification or reimbursement of costs provided in this Section unless it provides the Company with prompt notice, reasonable under the circumstances, of the existence or threat of any claim or liability, including, without limitation, copies of any citations, orders, fines, charges, remediation requests, or other claims or threats of claims, in order to afford the Company notice, reasonable under the circumstances, within which to defend or otherwise respond to a claim.

Section 4.7. ***Notices.*** All notices, certificates, requests, or other communications under this Agreement are sufficiently given and are deemed given, unless otherwise required by this Agreement, when (i) delivered and confirmed by United States first-class, registered mail, postage prepaid or (ii) sent by facsimile, and addressed as follows:

if to the County:	Richland County, South Carolina Attn: Director of Economic Development 2020 Hampton Street Columbia, South Carolina 29204 Phone: 803.576.2043 Fax: 803.576.2137
with a copy to (does not constitute notice):	Parker Poe Adams & Bernstein LLP Attn: Ray E. Jones 1221 Main Street, Suite 1100 (29201) Post Office Box 1509 Columbia, South Carolina 29202 Phone: 803.255.8000 Fax: 803.255.8017
if to the Company:	North Main Senior, LLC c/o Integral Development LLC 191 Peachtree Street NE, Suite 4100 Atlanta, Georgia 30303
with a copy to (does not constitute notice):	The Veranda at North Main, LLC c/o Columbia Empowerment Zone, Inc. 3200 Grand Street Columbia, South Carolina 29203
with a copy to (does not constitute notice):	Haynsworth Sinkler Boyd, P.A. Attn: Benton D. Williamson 1201 Main Street, 22nd Floor Columbia, South Carolina 29201

The County and the Company may, by notice given under this Section, designate any further or different addresses to which subsequent notices, certificates, requests or other communications shall be sent.

Section 4.8. ***Administrative Fees.*** The Company will reimburse, or cause reimbursement to, the County for the Administration Expenses in the amount of $3,000. The Company will reimburse the County for its Administration Expenses on receipt of a written request from the County or at the County's direction, which request shall include a statement of the amount and nature of the Administration Expense. The Company shall pay the Administration Expenses as set forth in the written request no later than 60 days following receipt of the written request from the County. For purposes of this Section, "Administration Expenses" means the reasonable expenses incurred by the County in the negotiation, approval and implementation of the terms and provisions of this Agreement, including reasonable attorneys' fees. Administration Expenses do not include any costs, expenses, including attorneys' fees, incurred by the County (i) in defending challenges to the Fee Payments or Infrastructure Credits brought by third parties or the Company or its affiliates and related entities, or (ii) in connection with matters arising at the request of the Company outside of the immediate scope of this Agreement, including amendments to the terms of this Agreement. The payment by the Company of the County's Administration Expenses shall not be construed as prohibiting the County from engaging, at its discretion, the counsel of the County's choice.

Section 4.9. ***Entire Agreement.*** This Agreement expresses the entire understanding and all agreements of the Parties with each other, and neither Party is bound by any agreement or any representation to the other Party which is not expressly set forth in this Agreement or in certificates delivered in connection with the execution and delivery of this Agreement.

Section 4.10 ***Agreement to Sign Other Documents.*** From time to time, and at the expense of the Company, to the extent any expense is incurred, the County agrees to execute and deliver to the Company such additional instruments as the Company may reasonably request and as are authorized by law and reasonably within the purposes and scope of the Act and this Agreement to effectuate the purposes of this Agreement.

Section 4.11. ***Agreement's Construction.*** Each Party and its counsel have reviewed this Agreement and any rule of construction to the effect that ambiguities are to be resolved against a drafting party does not apply in the interpretation of this Agreement or any amendments or exhibits to this Agreement.

Section 4.12. ***Applicable Law.*** South Carolina law, exclusive of its conflicts of law provisions that would refer the governance of this Agreement to the laws of another jurisdiction, governs this Agreement and all documents executed in connection with this Agreement.

Section 4.13. ***Counterparts.*** This Agreement may be executed in any number of counterparts, and all of the counterparts together constitute one and the same instrument.

Section 4.14. ***Amendments.*** This Agreement may be amended only by written agreement of the Parties.

Section 4.15. ***Waiver.*** Either Party may waive compliance by the other Party with any term or condition of this Agreement but the waiver is valid only if it is in a writing signed by the waiving Party.

Section 4.16. ***Termination.*** Unless first terminated under any other provision of this Agreement, this Agreement terminates on the expiration of the Credit Term and payment by the Company of any outstanding Net Fee Payment due on the Project pursuant to the terms of this Agreement.

Section 4.17. ***Business Day.*** If any action, payment, or notice is, by the terms of this Agreement, required to be taken, made, or given on any Saturday, Sunday, or legal holiday in the jurisdiction in which

the Party obligated to act is situated, such action, payment, or notice may be taken, made, or given on the following business day with the same effect as if taken, made or given as required under this Agreement, and no interest will accrue in the interim.

[TWO SIGNATURE PAGES FOLLOW]
[REMAINDER OF PAGE INTENTIONALLY BLANK]

IN WITNESS WHEREOF, Richland County, South Carolina, has caused this Agreement to be executed by the appropriate officials of the County and its corporate seal to be affixed and attested, effective the day and year first above written.

RICHLAND COUNTY, SOUTH CAROLINA

Chair, Richland County Council

(SEAL)
ATTEST:

Clerk to Council, Richland County Council

[SIGNATURE PAGE 1 TO INFRASTRUCTURE CREDIT AGREEMENT]

IN WITNESS WHEREOF, Company has caused this Agreement to be executed by its authorized officer(s), effective the day and year first above written.

NORTH MAIN SENIOR, LLC, A SOUTH CAROLINA LIMITED LIABILITY COMPANY

By: INTEGRAL NORTH MAIN, LLC, a Georgia limited liability company, its co-managing member

By:_____
Name: Daryl C. Jones
Its: Vice President

[SIGNATURE PAGE 2 TO INFRASTRUCTURE CREDIT AGREEMENT]

EXHIBIT A

LAND DESCRIPTION

All those certain pieces, parcels or lots of land with the improvements thereon, known as 3700 North Main Street, Columbia, South Carolina being situate, lying and being in the City of Columbia, County of Richland, State of South Carolina, containing **1.873** acres, more or less, and being shown on that certain plat prepared for Integral Development, LLC by Site Design, Inc. dated November 27, 2017 and last revised December 27, 2017.

AND BEING MORE PARTICULARLY DESCRIBED AS FOLLOWS:

BEGINNING AT A POINT LOCATED ON THE EASTERN RIGHT OF WAY OF MAIN STREET (U.S. HWY. 21) AT THE NORTHWESTERN END OF A MITERED CORNER MARKING THE INTERSECTION OF SAID EASTERN RIGHT OF WAY OF MAIN STREET (U.S. HWY 21) AND THE NORTHERN RIGHT OF WAY OF MILLER AVENUE, SAID POINT ALSO BEING LOCATED N 15-51-27 E 15.00 FEET FROM AN IRON PIN OLD 3/4" OPEN TOP LOCATED AT THE INTERSECTION OF SAID RIGHTS OF WAY IF EXTENDED; THENCE RUNNING ALONG SAID EASTERN RIGHT OF WAY OF MAIN STREET (U.S. HWY. 21) N 15-51-27 E 144.55 FEET TO AN IRON PIN OLD 1/2" REBAR; THENCE N 15-38-03 E 156.89 FEET TO POINT LOCATED AT THE SOUTHWESTERN END OF A MITERED CORNER MARKING THE INTERSECTION OF THE EASTERN RIGHT OF WAY OF MAIN STREET (U.S. HWY 21) AND THE SOUTHERN RIGHT OF WAY OF ELMORE STREET; THENCE TURNING AND LEAVING SAID EASTERN RIGHT OF WAY AND RUNNING ALONG SAID MITERED CORNER N 54-44-45 E 31.04 FEET TO A POINT LOCATED AT THE NORTHEASTERN END OF SAID MITERED CORNER, SAID POINT BEING LOCATED ON THE SOUTHERN RIGHT OF WAY OF ELMORE STREET; THENCE TURNING AND RUNNING WITH SAID SOUTHERN RIGHT OF WAY S 86-08-32 E 139.18 FEET TO AN IRON PIN OLD 1-1/2" OPEN TOP; THENCE S 87-41-46 E 64.88 FEET TO IRON PIN OLD 1/2" REBAR AT THE JOINT CORNER OF FJ TUCKER PROPERTY, NOW OR FORMERLY; THENCE TURNING AND LEAVING SAID SOUTHERN RIGHT OF WAY AND RUNNING WITH THE COMMON LINES OF THE TUCKER PROPERTY S 15-07-21 W 122.01 FEET TO AN IRON PIN OLD 1/2" REBAR; THENCE S 15-13-29 W 50.06 FEET TO IRON PIN OLD 1/2" REBAR; THENCE S 87-41-55 E 25.38 TO AN IRON PIN OLD 1/2" REBAR AT THE JOINT CORNER OF 1216 MILLER LLC PROPERTY, NOW OR FORMERLY; THENCE TURNING AND RUNNING WITH THE COMMON LINE OF SAID 1216 MILLER LLC PROPERTY S 00-37-38 W 164.18 FEET TO AN IRON PIN OLD 1/2" REBAR (BENT) LOCATED ON THE NORTHERN RIGHT OF WAY OF MILLER AVENUE, CROSSING OVER AN IRON PIN OLD 1" OPEN TOP AT 161.45 FEET; THENCE TURNING AND RUNNING ALONG SAID NORTHERN RIGHT OF WAY N 85-57-12 W 279.24 FEET TO A POINT LOCATED AT THE SOUTHEASTERN END OF A MITERED CORNER MARKING THE INTERSECTION OF SAID NORTHERN RIGHT OF WAY OF MILLER AVENUE AND THE EASTERN RIGHT OF WAY OF MAIN STREET (U.S. HWY. 21); THENCE LEAVING THE NORTHERN RIGHT OF WAY OF MILLER AVENUE AND RUNNING ALONG SAID MITERED CORNER N 35-02-52 W 18.92 FEET TO THE POINT AND PLACE OF BEGINNING.

Tax Map Numbers: 09209-20-04 and 09209-20-03

EXHIBIT B

DESCRIPTION OF INFRASTRUCTURE CREDIT

The Company is entitled to an Infrastructure Credit equal to 97% of the annual Fee Payment due with respect to the Project for a period of 30 years commencing with the first Fee Payment due with respect to the Project.

EXHIBIT C

FORM OF CREDIT CERTIFICATE

Reference is made to that certain Infrastructure Credit Agreement effective as of _____, 2019 *("Credit Agreement")*, by and among Richland County, South Carolina *("County")*, and North Main Senior, LLC *("Company")*. Each capitalized term not defined herein has the meaning ascribed thereto in the Credit Agreement. Company shall in each respective tax year, submit this Certification to County.

As set forth in Section 2.2 of the Credit Agreement, County has agreed to provide Infrastructure Credits against Fee Payments made by the Company as part of the Project. Pursuant to Section 2.2 of the Credit Agreement, the Company is entitled to an Infrastructure Credit in an amount equal to 97% of the annual Fee Payment due with respect to the Project for a term of 30 years. Pursuant to Section 2.3 of the Credit Agreement, the Company shall be required to pay the Repayment Amount in the event there is an Event of Default occurring under the Restrictive Covenants. The Repayment Amount shall be calculated based on the percentage of occupied dwelling units in the Project which fail to satisfy the Low Income Rental Restrictions divided by the total number of occupied dwelling units in the Project for the prior calendar year.

In accordance with the terms of the Credit Agreement, the undersigned authorized agent of the Company certifies Items 1 through 5 as follows:

1. For tax year [YEAR], the Company hereby certifies that the Project contains [ ] occupied units.

2. For tax year [YEAR], the Company hereby certifies that _____ occupied units failed to satisfy the Low Income Rental Restrictions.

3. For tax year [YEAR], the Company received $ _____ in Infrastructure Credits, which is the amount required to reduce the Company's tax liability $_____.

4. Pursuant to Section 2.3 of the Credit Agreement, the Repayment Amount shall be calculated as follows:

   Low Income Rental Percentage = _____
   Clawback Percentage = 100% - % _____
   Repayment Amount = $ _____ x _____ % = $ _____

5. For tax year [YEAR], the Company is remitting the Repayment Amount equal to $ _____ _____ along with this Credit Certificate.

Should the County have a genuine dispute as to the validity or accuracy of the Repayment Amount calculations set forth in this Credit Certificate, the Company agrees to pay County's costs and fees, including its attorneys' fees and costs, associated with the certification, calculation, or adjustment of the Credit, in an amount up to $250 per year.

IN WITNESS WHEREOF, Company has caused this Agreement to be executed by its authorized officer(s), effective the day and year first above written.

NORTH MAIN SENIOR, LLC, A SOUTH CAROLINA LIMITED LIABILITY COMPANY

By: INTEGRAL NORTH MAIN, LLC, a Georgia limited liability company, its co-managing member

By:_____
Name: Daryl C. Jones
Its: Vice President

[SIGNATURE PAGE 2 TO INFRASTRUCTURE CREDIT AGREEMENT]

LEGAL DEPARTMENT DRAFT

ORDINANCE NO.: 2019-085

Amending the 1998 Code of Ordinances of the City of Columbia, South Carolina, Chapter 11, Licenses, Permits and Miscellaneous Business Regulations, Article II, Contractors, Sec. 11-71, Permit, indemnification and insurance requirements for work affecting streets or other public property to add (e) Outdoor dining encroachments

BE IT ORDAINED by the Mayor and Council this ____ day of _____, 2019 that the 1998 Code of Ordinances of the City of Columbia, South Carolina, Chapter 11, Licenses, Permits and Miscellaneous Business Regulations, Article II, Contractors, Sec. 11-71 Permit, indemnification and insurance requirements for work affecting streets or other public property is amended to add (e) Outdoor dining encroachments, to read as follows:

Sec. 11-71. Permit, indemnification and insurance requirements for work affecting streets or other public property.

(a) *Permit required; indemnification of city*. Any person who proposes to perform any activity which requires excavation, encroachment, the possibility of encroachment, or temporary use or disruption of any street, easement, public right-of-way or other property owned by or under the control of the city shall be required to obtain a permit before conducting such activity. As a condition for the issuance of such permit, the permittee shall be required to indemnify the city and its agents and employees from and against all claims, damages, losses and expenses, including attorneys' fees, arising out of or resulting from the permitted activity, whether such activity is conducted by the permittee or its agents, employees, contractors or subcontractors, and to comply with the requirements of subsection (b) of this section.

(b) *Liability insurance.*

(1) To ensure the indemnification required by subsection (a) of this section, each permittee, except utility companies regulated by the state public service commission, shall provide the city, prior to the issuance of any permit, proof of liability insurance as follows:

a. An owner's and contractor's protective liability policy issued in the name of the owner for whom the activity is to be performed, with the city named as an additional insured, in an amount not less than $300,000.00 per occurrence limit for bodily injury, personal injury and property damage, with an aggregate liability not less than $600,000.00 (Coverage shall be at least as broad as provided for in the most current version of the Insurance Services Office Form) applicable to such policy;) and

b. A separate general liability policy naming the contractor or other person who will be performing the activity as insured and also naming the city as an additional insured in an amount not less than $300,000.00 per occurrence and $600,000.00 aggregate limit for bodily injury, personal injury and property damage. (Coverage shall be at least as broad as provided for in the most current version of the Insurance Services Office Form applicable to such policy.)

(2) An applicant for a permit may elect not to provide an owner's and contractor's protective liability policy as required by subsection (b)(1)a of this section, but if such election is made the limits of liability required on the general liability policy required by subsection (b)(1)b of this section shall be no less than $1,000,000.00 per occurrence and $2,000,000.00 aggregate limit for bodily injury, personal injury and property damage.

(3) An applicant for a permit may further elect not to provide any proof of liability insurance to the city as required by subsection (b)(1) or (2) of this section, but if such election is made an indemnity surety bond in an amount not less than $4,000,000.00 and approved as to surety and form by the city attorney shall be filed in lieu of the required insurance.

(4) Any insurance policy provided to the city in satisfaction of the requirements of this subsection (b) shall specifically provide that the insurer provide written notice to the city at least 30 days prior to cancellation, termination or modification of the coverage provided to the city.

(5) If it appears that the proposed activity poses unusual hazard or danger to the public, the city manager may require such additional amounts of insurance coverage as he shall deem appropriate.

(6) The insurance requirements of this section shall supersede all other such provisions in this Code.

LEGAL DEPARTMENT DRAFT

(c) *Contractors working for city*.

(1) Contractors performing construction, maintenance or repair work for the city are required to provide proof of liability insurance as follows:

a. An owner's and contractor's protective liability policy issued in the name of the city, in an amount not less than $2,000,000.00 per occurrence limit for bodily injury, personal injury and property damage, with an aggregate liability not less than $2,000.000.00. (Coverage shall be at least as broad as provided for in the most current version of the insurance services office form applicable to such policy);

b. A separate general liability policy naming the contractor or other person who will be performing the activity as insured and also naming the city as an additional insured in an amount not less than $1,000,000.00 per occurrence and $2,000,000.00 aggregate limit for bodily injury, personal injury, property damage and products completed operations. (Coverage shall be at least as broad as provided for in the most current version of the Insurance Services Office Form applicable to such policy); and

c. An excess liability policy naming the contractor or other person who will be performing the activity as insured and also naming the city as an additional insured in an amount not less than $2,000,000.00 for bodily injury, personal injury, property damage and products completed operations. (Coverage shall be at least as broad as provided for in the most current version of the Insurance Services Office Form applicable to such policy.)

(2) Any insurance policy provided to the city in satisfaction of the requirements of this subsection (c) shall specifically provide that the insurer provide written notice to the city at least 30 days prior to cancellation, termination or modification of the coverage provided to the city.

(3) The city manager, or his designee, may require such additional amounts of insurance coverage as he shall deem appropriate under the particular circumstances of the construction, maintenance or repair work to be performed.

(4) Contractors are also required to comply with any other or additional indemnification or insurance requirements as may be stated in the bid documents or their contract with the city.

(d) *Continuing encroachments*. Continuing encroachments into, over or under the streets, rights-of-way or other property owned or controlled by the city shall be authorized only by ordinance duly enacted by the city council. Insurance and indemnification requirements for such continuing encroachments shall be as specified in each authorizing ordinance; provided, however, that for encroachments granted by ordinance prior to December 1, 1987, each such ordinance is hereby amended to require proof of continuous general liability insurance naming the city as an additional insured in an amount not less than $600,000.00 per occurrence.

(e) *Outdoor dining encroachments*. The city manager is authorized to approve outdoor dining encroachments as set out by the policy and procedures for outdoor dining as adopted by City Council.

Requested by:

Assistant City Manager Gentry

Approved by:

City Manager

Approved as to form:

Senior Assistant City Attorney

Introduced:

Final Reading:

_____
Mayor

ATTEST:

_____
City Clerk

Last revised: 11/6/2019
19003217

ORDINANCE NO.: 2019-092

Granting an encroachment to Central Midlands Transit Authority – The COMET for the use of the right of way areas of the 1300 block of Bower Parkway adjacent to 350 Harbison Boulevard, 2300 block of Elmwood Avenue adjacent to 2325 Elmwood Avenue, and 5300 Block of Forest Drive adjacent to 5340 Forest Drive for the installation and maintenance of bus Shelters, Lexington County TMS#002898-01-031, and Richland County TMS#11505-05-01 and 16706-04-09

WHEREAS, the Central Midlands Transit Authority – The COMET (hereinafter "Grantee") desires to utilize a portion of the right of way area of the 1300 block of Bower Parkway adjacent to Sam's at 350 Harbison Boulevard, Lexington County TMS#002898-01-031, for the installation and maintenance of a concrete pad measuring approximately eleven (11′) feet in width eighteen (18′) feet in length, an enclosed aluminum bus shelter approximately five (5′) feet in width, sixteen (16′) feet in length and eight (8′) feet in height, a bench approximately six (6′) feet in length two (2′) feet in width, and a trash receptacle; the right of way area of the 2300 block of Elmwood Avenue adjacent to 2325 Elmwood Avenue, Richland County TMS#11505-05-01, for the installation and maintenance of a concrete pad measuring approximately eleven (11′) feet in width and eighteen (18′) feet in length, an enclosed aluminum bus shelter approximately five (5′) feet in width, sixteen (16′) feet in length and eight (8′) feet in height, a bench approximately six (6′) feet in length two (2′) feet in width, and a trash receptacle; and the right of way area of the 5300 Block of Forest Drive adjacent to Wendy's at 5340 Forest Drive, Richland County TMS#16706-04-09, for the installation and maintenance of a concrete pad measuring approximately nine (9′) feet in width and twelve (12′) feet in length, a concrete ramp approximately six (6′) feet in width and twenty (20′) feet in length, a bench approximately six (6′) feet in length and two (2′) feet in width, and a trash receptacle, as shown on the attached drawings; and,

WHEREAS, it appears that the encroachment will not interfere with the use of the medians or street for traffic, utility locations or other uses within the foreseeable future; NOW, THEREFORE,

BE IT ORDAINED by the Mayor and City Council of the City of Columbia, South Carolina, this _____ day of _____, 2019, that Grantee is hereby granted the right to use the right of way areas of the 1300 block of Bower Parkway adjacent to Sam's at 350 Harbison Boulevard, Lexington County TMS#002898-01-031, for the installation and maintenance of a concrete pad measuring approximately eleven (11′) feet in width eighteen (18′) feet in length, an enclosed aluminum bus shelter approximately five (5′) feet in width, sixteen (16′) feet in length and eight (8′) feet in height, a bench approximately six (6′) feet in length two (2′) feet in width, and a trash receptacle; the right of way area of the 2300 block of Elmwood Avenue adjacent to 2325 Elmwood Avenue, Richland County TMS#11505-05-01, for the installation and maintenance of a concrete pad measuring approximately eleven (11′) feet in width and eighteen (18′) feet in length, an enclosed aluminum bus shelter approximately five (5′) feet in width, sixteen (16′) feet in length and eight (8′) feet in height, a bench approximately six (6′) feet in length two (2′) feet in width, and a trash receptacle; and the right of way area of the 5300 Block of Forest Drive adjacent to Wendy's at 5340 Forest Drive, Richland County TMS#16706-04-09, for the installation and maintenance of a concrete pad measuring approximately nine (9′) feet in width and twelve (12′) feet in length, a concrete ramp approximately six (6′) feet in width and twenty (20′) feet in length, a bench approximately six (6′) feet in length and two (2′) feet in width, and a trash receptacle, as shown on the attached drawings.

ALL WORK SHALL COMPLY with the requirements of The City of Columbia, South Carolina Department of Transportation (SCDOT) and Federal Emergency Management Agency (FEMA) now in existence or hereafter enacted. The materials and type of finish to be used are to be approved by the City Engineer prior to installation. Any damage to the street or sidewalk caused by construction shall be repaired

to the satisfaction of the City Manager. Improvements within the encroachment shall be maintained by the grantee at no cost to the City in a manner approved by the City Manager.

PROVIDED FURTHER that the privilege granted hereby is subject to the Grantee complying with the following conditions, restrictions or limitations:

1. No item, including landscaping, shall be placed, planted or allowed to grow such that it creates a visual impediment to persons safely entering or exiting the driveway or to persons safely walking along the sidewalk. The City reserves the right to remove or cut any item located within the right of way which it deems to be a safety hazard.
2. Grantee is responsible for all maintenance and assuring that all accessibility and ADA requirements are met and maintained.
3. Landscaping to be maintained by property owner.
4. Existing irrigation should not spray walkways, sidewalks and streets and/or creating hazardous conditions upon the walkways, sidewalks and streets.
5. Obstructions of more than be four (4') feet in height are prohibited within the sight-visibility triangle.
6. Forestry and Beautification shall be provided access to trees within the right of way for maintenance purposes.
7. All trees shall be protected and no large tree roots shall be removed from any existing trees.
8. Applicant shall coordinate with Traffic Engineering and Street Division to determine exact locations of the shelters in an effort to avoid stacking issues at adjacent intersections.

PROVIDED FURTHER that the privilege granted hereby may be modified or terminated by Columbia City Council at any time without notice to the Grantee, its successors and assigns.

BE IT FURTHER ORDAINED that Grantee, in consideration of the above privilege, shall at its expense provide for protection and relocation of all utilities that might be within this area to the satisfaction of the City Manager.

Requested by:

Assistant City Manager Shealy

_____
Mayor

Approved by:

_____
City Manager

Approved as to form:

_____
Senior Assistant City Attorney

ATTEST:

_____
City Clerk

Introduced:
Final Reading:

DRAFT

Last revised: 10/31/2019
19003441

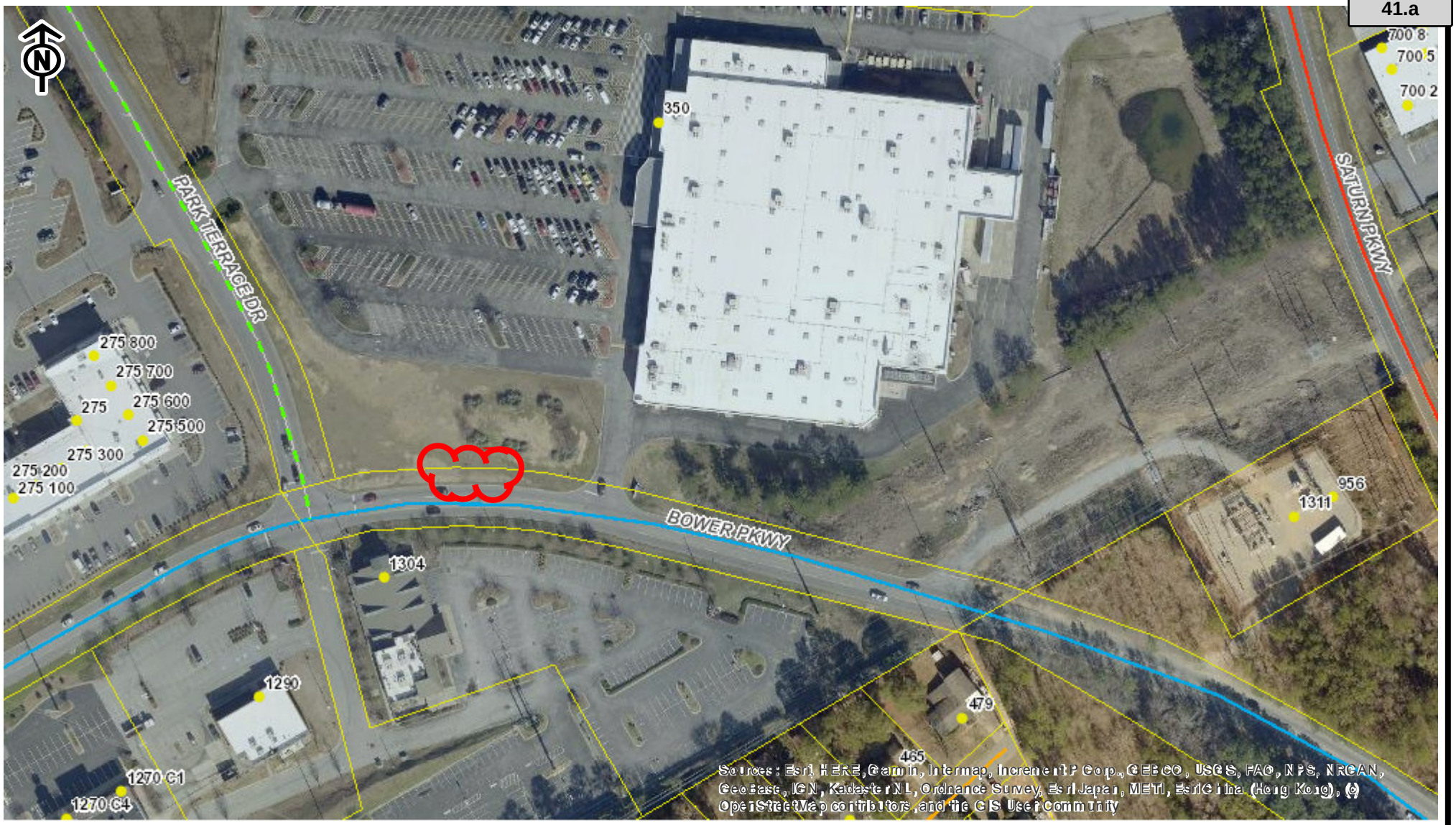

Comet Bus Shelter

City of Columbia

We Are Columbia

This map was prepared using the City GIS Viewer:

City of Columbia - GIS Division
Friday, September 27, 2019

- Address Point
- Tax Parcel

Street Ownership

- City of Columbia
- State
- County
- Federal
- Private
- University of South Carolina
- Working
- Interstates

Highways

- US
- SC
- Arterial Streets
- Columbia City Limits
- Red: Red
- Green: Green
- Blue: Blue

0 0.02 0.04 0.08 mi

CITY OF COLUMBIA
GIS DATA DISCLAIMER:
The City of Columbia GIS data represented on this map or plan is the product of the compilation of data produced by others. It is provided for informational purposes only and the City of Columbia makes no representation as to its accuracy. Its use without field verification is at the sole risk

BUS STOP #385
BOWER PARKWAY &
PARK TERRACE DRIVE

*TIE PROPOSED CONCRETE PAD FLUSH WITH THE BACK OF THE EXISTING SIDEWALK. PAD MUST HAVE A TRANSVERSE SLOPE NO LESS THAN 50:1 AND NO GREATER THAN 12:1. THE LONGITUDINAL SLOPE OF THE NEW PAD SHALL MATCH THE LONGITUDINAL SLOPE OF THE EXISTING SIDEWALK.
*CONCRETE PAD SHALL BE 6" THICK.

*SEE SHOP DRAWINGS FOR ALL DETAILS AND DIMENSIONS OF SHELTER, CONCRETE PAD, AND TRASH CAN.
*BUS SHELTER AND TRASH CAN TO BE MAINTAINED BY THE COMET.
*MOUNT NEW TRASH CAN TO NEW BUS STOP SIGN.

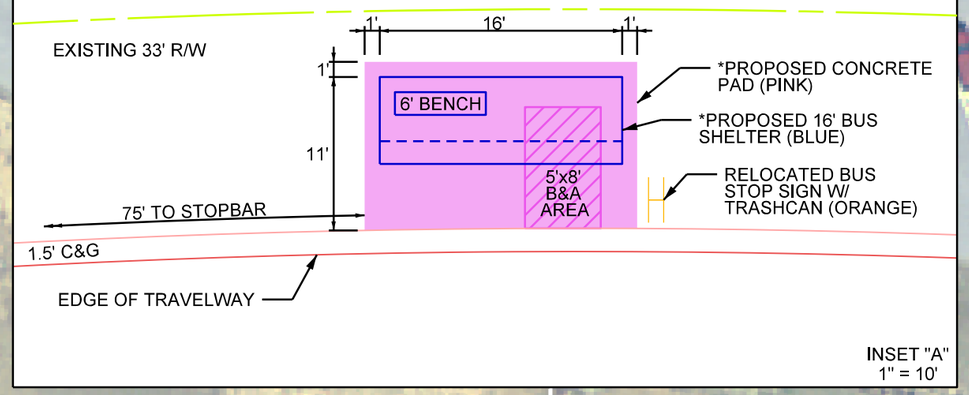

INSET "A"
1" = 10'

DATE: 4/25/2019
PENTABLE: COMET-PDF.tbl
FILE: \\cd-fs1\data\Jobs\Even\13468-00\Production\V_dgn\Phase 8S- Bower & Park Terrace\Bower & Park Terrace.dgn
SCALE: 40.000 ft / in.

REQUEST FOR A PERMANENT COMMERCIAL ENCROACHMENT ORDINANCE (INCLUDING OUTDOOR DINING/LANDSCAPING/STUDENT HOUSING)

For a continuing encroachment on any type of property in which the City has an interest (i.e., rights of way, tree zone, sidewalk, streets), the person or entity is required to have an encroachment ordinance enacted by City Council permitting the encroachment. Encroachment ordinances are required for but not limited to: irrigation systems; landscaping; fencing; walls; pavers; walkways; outdoor dining items (chairs, tables, umbrellas, etc.); awnings; bollards and directional signs (i.e., churches) Business signs are NOT permitted via an encroachment. Encroachments must comply with all existing City codes, rules and regulations, the Americans with Disabilities Act, if applicable, and are subject to review and approval by City staff. Enactment of the encroachment ordinance by a majority vote of City Council, which is a discretionary legislative act, is also required. In order to obtain an encroachment ordinance from the City of Columbia, it will be necessary for the City of Columbia to be named as an additional insured on your insurance policy with limits being increased to $600,000 as required by Sec. 11-71. It is recommended that you contact your insurance provider to determine if it will name the City of Columbia as an additional insured prior to submitting your request for an encroachment ordinance. If you have any questions concerning these requirements, please contact Chip Timmons with Risk Management, (803) 733-8306 or catimmons@columbiasc.net.

Please complete and submit this form along with photographs and drawings or site plan drawn to scale (including a 8-1/2 x11) to Johnathan Chambers by e-mail at jechambers@columbiasc.net; fax at 803-343-8779; or mail to Johnathan Chambers, Development Services, POB 147 Columbia, SC 29217, for preparation of an encroachment ordinance. Copies to City departments should be directed to the contact person for that department as shown below.

All work shall comply with the requirements of the City of Columbia and South Carolina Department of Transportation now in existence or hereafter enacted. The materials and type of finish to be used are to be approved by the City Engineer prior to installation. Any damage to the street or sidewalk caused by construction shall be repaired to the satisfaction of the City Manager. Improvements within the encroachment shall be maintained by the grantee at no cost to the City in a manner approved by the City Manager. Property owned, operated and maintained by SCDOT shall comply with SCDOT encroachment requirements.

Date: 05/29/2019 Property Owner: City of Columbia

Applicant's Name if different from Property Owner: Central Midlands Transit Authority-The COMET

Contact Information: Telephone Number: 803-255-7087 Fax Number:

Mailing address: 3613 Lucius Road, Columbia, SC 29204 E-mail address: zmcghee@davisfloyd.com

Business Name/Development Name for Encroachment: Central Midlands Transit Authority-The COMET

Encroachment type: ___Wall ___ Fence ___ Columns ___ Steps ___ Irrigation System ___ Landscaping ____ Driveway ____ Pavers __X__ Sidewalk/Walkway
Planters Awning Underground Utilities Other: Bus Shelter

Dimensions (height/width/length): 6"x12'x18' Concrete Pad
(i.e. 6'x42' wooden privacy fence; 9'x6'x16' Bus Shelter
two 12'x4'x3' concrete steps)

Construction material: Shelter-Aluminum Frame with Safety Glass Panels

☐ ***OUTDOOR DINING:*** *The Fire Marshal's posted capacity allowed within the business at the time of enactment of the outdoor dining encroachment ordinance shall include the total number of patron seating approved for the outdoor dining encroachment area, if not already included in the posted capacity allowance, so that patrons relocating from inside to the outside or from outside to the inside do not cause the posted capacity to be exceeded.*

Hours/days of operation for outdoor dining: N/A

Posted Maximum Capacity Allowance (inside/outside combined): N/A No. of chairs outdoors: N/A No. of Tables Outdoors: N/A

Do you serve: ☐ Wine ☐ Beer ☐ Liquor SCDOR ABL No.: N/A If not, do you intend to apply for an ABL license? N/A

I acknowledge that the adjoining property owners and businesses have been contacted and approve the addition of outdoor dining at this location to include the service of beer, wine and/or liquor if applicable during the business hours noted above, and that any changes made to the business hours, use of the encroachment area or items allowed within the encroachment area will require an amendment to the encroachment ordinance.

Name/Title:
Date:

I acknowledge that any changes made to the business, hours, use of the encroachment area, or items allowed within the encroachment area, to include obtaining a license to sell beer, wine and/or liquor will require an amendment to the encroachment ordinance.

Name/Title:
Date:

The proposed ordinance will be sent to the requesting party and City offices for review and approval. Johnathan Chambers will compile the recommendations and forward them to the City Clerk for scheduling before City Council. This process may take from 30-90 days.

CONTACT	DEPARTMENT	PHONE	FAX	E-MAIL
Johnathan Chambers	Development Services (Land Development)	803-545-3333	803-343-8779	jechambers@columbiasc.net
John Fellows	Development Services (Planning)	803-545-3222	803-733-8647	jsfellows@columbiasc.net
Brian Cook	Development Services (Zoning)	803-545-3332	803-733-8647	kbcook@columbiasc.net
Jerry Thompson	Development Services (Building Inspections)	803-545-3420	803-733-8699	jlthompson@columbiasc.net
Fanessa Pinckney	Development Services (Permits)	803-545-3420	803-733-8699	fcpinckney@columbiasc.net
Amy Moore	Development Services (Historic Preservation)	803-545-3222	803-733-8647	aemoore@columbiasc.net
Robert Harkins	Development Services (Plans Review)	803-545-3420	803-733-8647	rlharkins@columbiasc.net
Denny Daniels	Utilities & Engineering (Construction Management)	803-545-3400	803-988-8199	jddaniels@columbiasc.net
Robert Anderson	Public Works (Administration)	803-545-3780	803-733-8648	raanderson@columbiasc.net
Robert Sweat	Public Works (Street Division)	803-545-3790	803-545-3785	rgsweatt@columbiasc.net
David Brewer	Public Works (Traffic Engineering)	803-545-3850	803-733-8648	ddbrewer@columbiasc.net
Sara Hollar	Public Works (Forestry & Beautification)	803-545-3860	803-733-8648	sehollar@columbiasc.net
John Hooks	Public Works (Solid Waste)	803-545-3800	803-733-8648	jphooks@columbiasc.net
Chip Timmons	Risk Management	803-733-8306	803-733-8245	catimmons@columbiasc.net
David Koon	Fire Department	803-545-3701	803-401-8839	cfdgkoon@columbiasc.net
John David Spade	Parking Services	803-545-3070	803-733-8523	spade@columbiasc.net

LR: 7/2014

GENERAL NOTES:

1. ALL STRUCTURAL STEEL, UNLESS OTHERWISE NOTED, SHALL BE ASTM A-36, MINIMUM YIELD STRENGTH 36,000 PSI.
2. ALL STRUCTURAL ALUMINUM MEMBERS, UNLESS OTHERWISE NOTED, SHALL BE OF ALLOY 6063-T5 OR GREATER.
3. ALL HOLES TO BE DRILLED OR PUNCHED.
4. STEEL WELDING SHALL CONFORM TO AMERICAN WELDING SOCIETY STANDARD D1. 1-10. ELECTRODES SHALL CONFORM TO AWS 5.1, CLASS E70S-5.
5. ALUMINUM WELDING SHALL CONFORM TO AMERICAN WELDING SOCIETY STANDARD D1. 2-08. ELECTRODES SHALL CONFORM TO AWS/SFA 5.10 CLASS ER4043.
6. ALL WELDING TO BE DONE AT TOLAR MANUFACTURING COMPANY, INC. FACILITY.
7. ALL CORPORATE PROCEDURES, INCLUDING FABRICATION, MUST BE IN COMPLIANCE WITH TOLAR MANUFACTURING CO. INC'S QUALITY CONTROL MANUAL

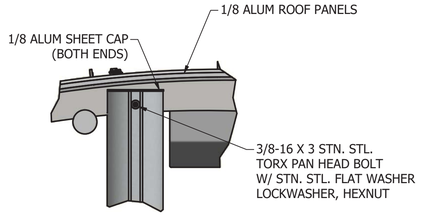

DETAIL H
SCALE 1/6

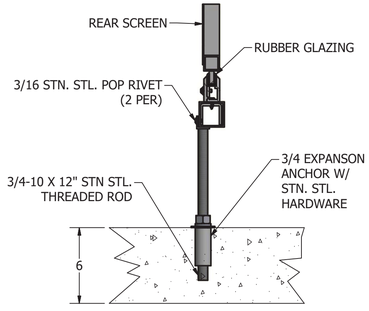

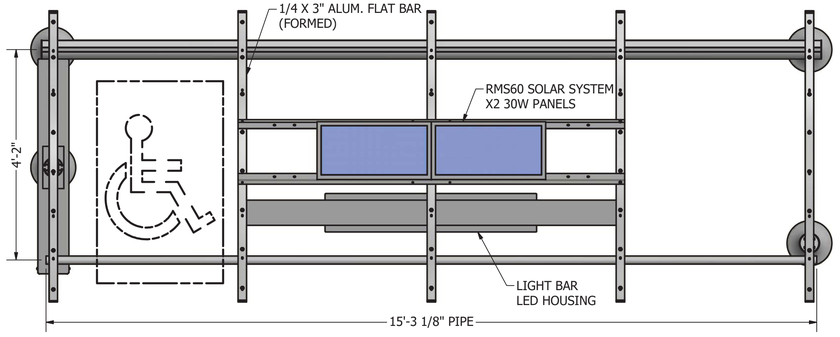

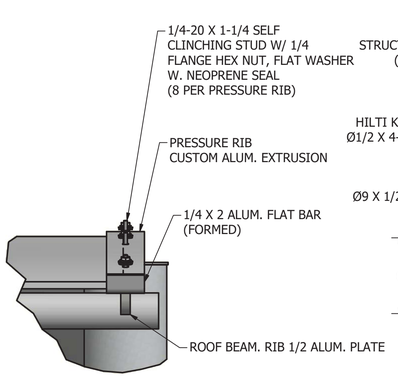

DETAIL B
SCALE 1/4

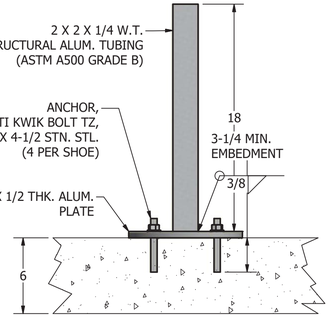

DETAIL F
SCALE 1/6

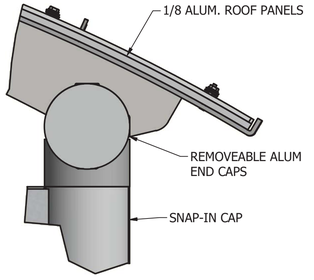

DETAIL C
SCALE 1/4

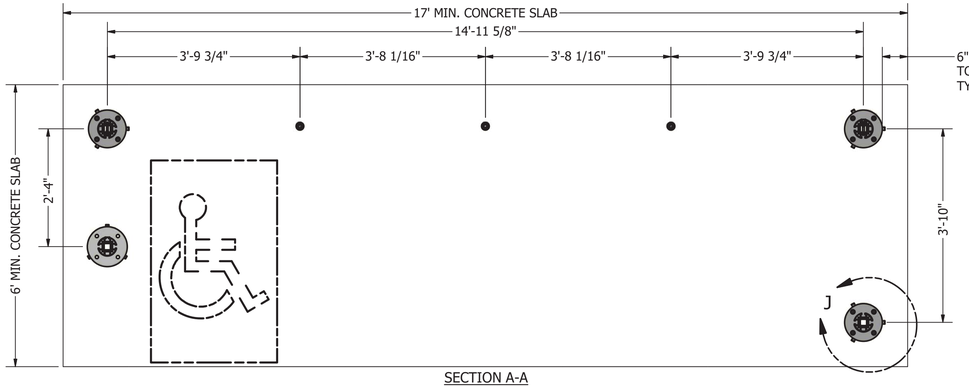

SECTION A-A
SCALE 1/18

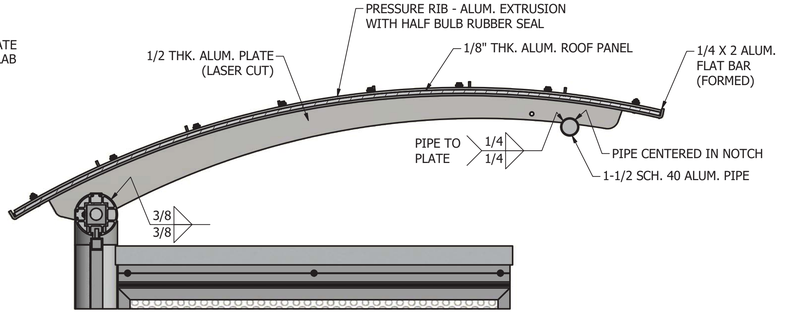

SECTION G-G
SCALE 1/8

SECTION D-D
GLASS SUPPORT
SCALE 1/6

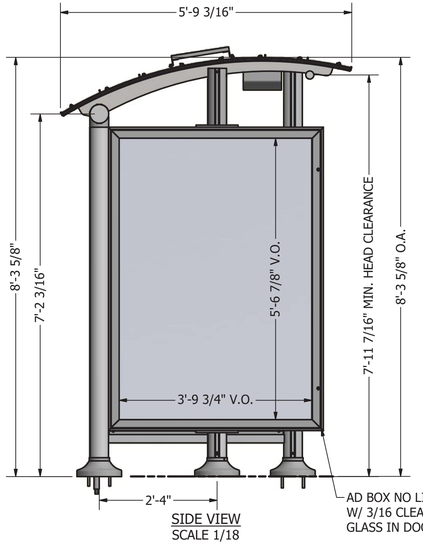

SIDE VIEW
SCALE 1/18

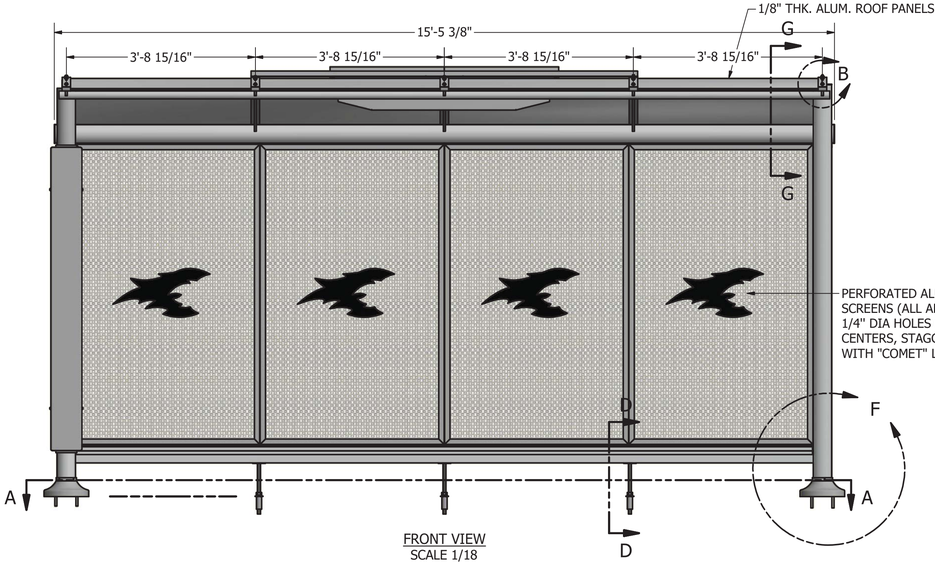

FRONT VIEW
SCALE 1/18

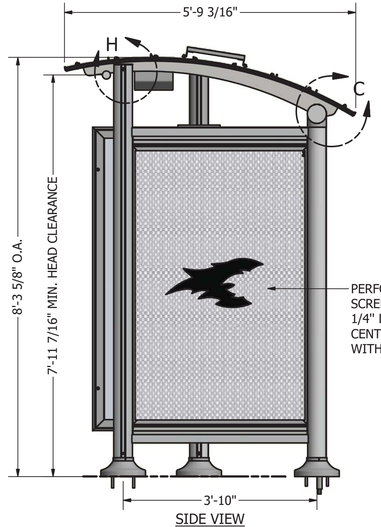

SIDE VIEW
SCALE 1/18

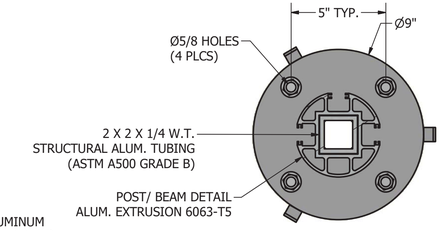

DETAIL J
SCALE 1/4

TOLAR	Tolar Manufacturing Company, Inc 258 Mariah Circle, Corona CA. 92879		
DESCRIPTION	16' AD CUSTOM DOME SHELTER		
CUSTOMER/VENDOR	COLUMBIA, SC		SHEET NO. 1 of 1
SIZE D	MATL. ALL ALUMINUM	DWG NO. 33271-01	REV. NO. -
STOCK #:	DATE 5/14/2019	DRAWN BY: RFarr	

T:\Inventor\Shelters\Ad Custom Dome\33271-01.idw

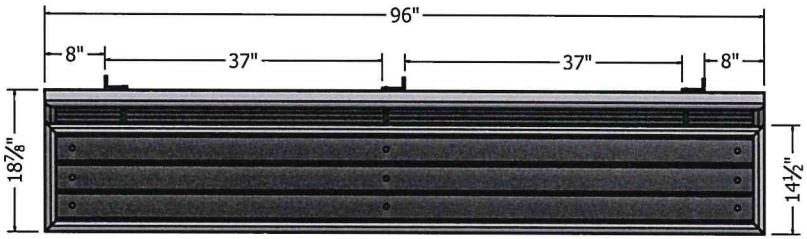

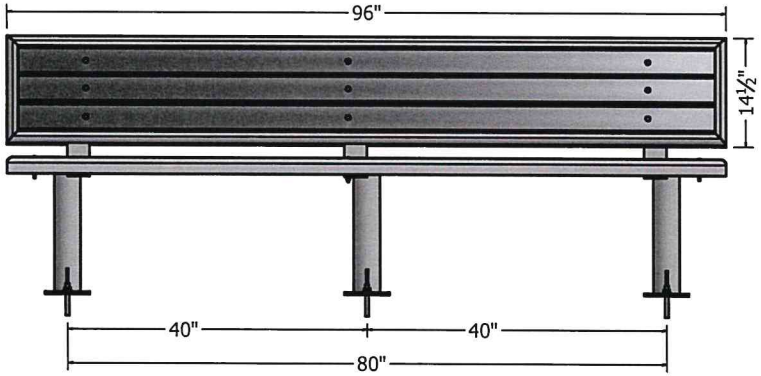

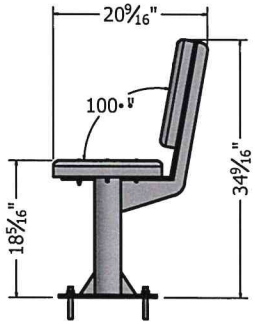

CONFIGURATION A	
1	PLANT 1
2	PLANT 2

CONFIGURATION B - ANCHORS	
0	NO ANCHORS
1	1/2" X 3 3/4" SUP-R ANCHORS, ZINC
2	1/2" X 3 3/4" SUP-R ANCHORS, STN STL
3	1/2" X 4 1/4" SUP-R ANCHORS, ZINC
4	1/2" X 4 1/4" SUP-R ANCHORS, STN STL
5	1/2" X 3 3/4" HILTI TZ ANCHORS, ZINC
6	1/2" X 3 3/4" HILTI TZ ANCHORS, STN STL
7	1/2" X 4 1/2" HILTI TZ ANCHORS, ZINC
8	1/2" X 4 1/2" HILTI TZ ANCHORS, STN STL
9	SPECIAL - SPECIFIED ON SALES ORDER

CONFIGURATION C - FINISH	
0	NONE
1	STANDARD POWDER COAT
2	STANDARD POWDER COAT WITH CLEAR COAT
3	PREMIUM POWDER COAT
4	PREMIUM POWDER COAT WITH CLEAR COAT
5	TBD
6	TBD
7	TBD
8	TBD
9	SPECIAL - SPECIFIED ON SALES ORDER

EXAMPLE: 30827 - 1 2 1

- 30827 - DRAWING NUMBER
- 1 - CONFIGURATION A
- 2 - CONFIGURATION B
- 1 - CONFIGURATION C

TOLAR MANUFACTURING COMPANY, INC
258 Mariah Circle, Corona CA. 92879

DESCRIPTION: ASSEMBLY, 8' EURO BENCH WITH BACK NO VAGRANT BARS

CUSTOMER/VENDOR		PG.
TOLAR STD.		1 OF 3
SIZE: B	MATL.: VARIES	DWG NO.: 30827-00 / REV.: -
SCALE	DATE: 10/5/2017	DRAWN BY: Rfarr

T:\Inventor\Benches\30827-00.idw

PARTS LIST			
ITEM	QTY	PART NUMBER	DESCRIPTION
1	1	30826-00	WELDMENT, 8' EURO BENCH W/ BACK NO VAGRANT BARS
2	6	8124250	BOLT, CARRIAGE 1/4-20 x 2 1/2" STN STL
3	12	8124300	BOLT, CARRIAGE 1/4-20 x 3" STN STL
4	18	8684053	1/4" FLAT WASHER STN. STL.
5	18	8703049	1/4" LOCK WASHER SS, SPRING LOCK
6	18	8155036	HEX NUT, 1/4-20 STN. STL.
7	1	30828-00	WELDMENT, 8' EURO BENCH BACK BAR
8	3	30829-00	RECYCLED MATERIAL BENCH SLAT SEAT
9	3	30831-00	RECYCLED MATERIAL BENCH SLAT BACK REST
10	6	8037450	ANCHOR KWIK BOLT TZ 1/2 X 4 1/2 STN. STL.

TOLAR MANUFACTURING COMPANY, INC
258 Mariah Circle, Corona CA. 92879

DESCRIPTION: ASSEMBLY, 8' EURO BENCH WITH BACK NO VAGRANT BARS

CUSTOMER/VENDOR: ALPINE COUNTY COMMUNITY | PG. 2 OF 3

SIZE	MATL.	DWG NO.	REV
B	VARIES	30827-00	-

SCALE | DATE 10/5/2017 | DRAWN BY: Rfarr

T:\Inventor\Benches\30827-00.idw

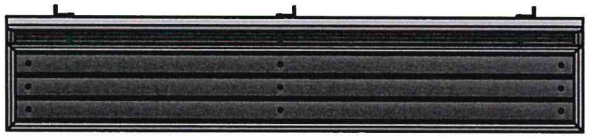

TOP VIEW
SCALE 1/20

FRONT VIEW
SCALE 1/20

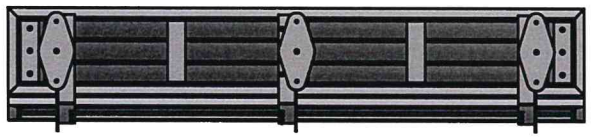

BOTTOM VIEW
SCALE 1/20

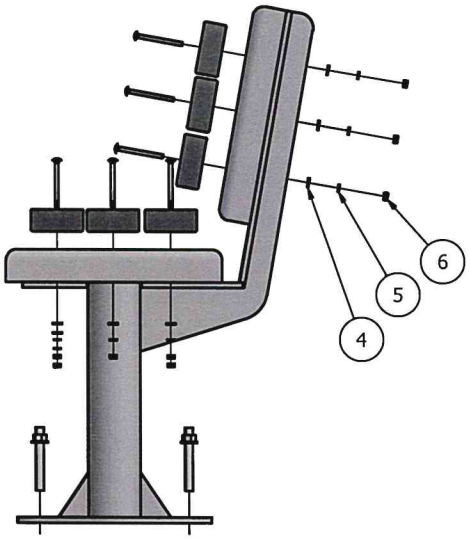

TOLAR MANUFACTURING COMPANY, INC 258 Mariah Circle, Corona CA. 92879			
DESCRIPTION: ASSEMBLY, 8' EURO BENCH WITH BACK NO VAGRANT BARS			
CUSTOMER/VENDOR: ALPINE COUNTY COMMUNITY			PG. 3 OF 3
SIZE: B	MATL.: VARIES	DWG NO.: 30827-00	REV: -
SCALE	DATE: 10/5/2017	DRAWN BY: Rfarr	

T:\Inventor\Benches\30827-00.idw

REVISION HISTORY				
ZONE	REV	DESCRIPTION	DATE	APPROVED

GENERAL NOTES:

1. ALL STRUCTURAL STEEL, UNLESS OTHERWISE NOTED, SHALL BE ASTM A-36, MINIMUM YIELD STRENGTH 36,000 PSI.
2. ALL STRUCTURAL ALUMINUM MEMBERS, UNLESS OTHERWISE NOTED, SHALL BE OF ALLOY 6063-T5 OR GREATER.
3. ALL HOLES TO BE DRILLED OR PUNCHED.
4. STEEL WELDING SHALL CONFORM TO AMERICAN WELDING SOCIETY STANDARD D1. 1-10. ELECTRODES SHALL CONFORM TO AWS 5.1, CLASS E70S-5.5. ALUMINUM WELDING SHALL CONFORM TO AMERICAN WELDING SOCIETY STANDARD D1. 2-08. ELECTRODES SHALL CONFORM TO AWS/SFA 5.10 CLASS ER4043.
6. ALL WELDING TO BE DONE AT TOLAR MANUFACTURING COMPANY, INC. FACILITY.
7. ALL CORPORATE PROCEDURES, INCLUDING FABRICATION, MUST BE IN COMPLIANCE WITH TOLAR MANUFACTURING CO. INC'S QUALITY CONTROL MANUAL

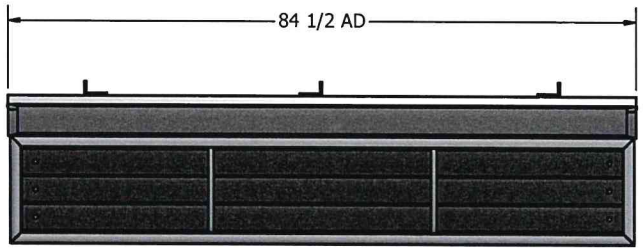

TOP VIEW

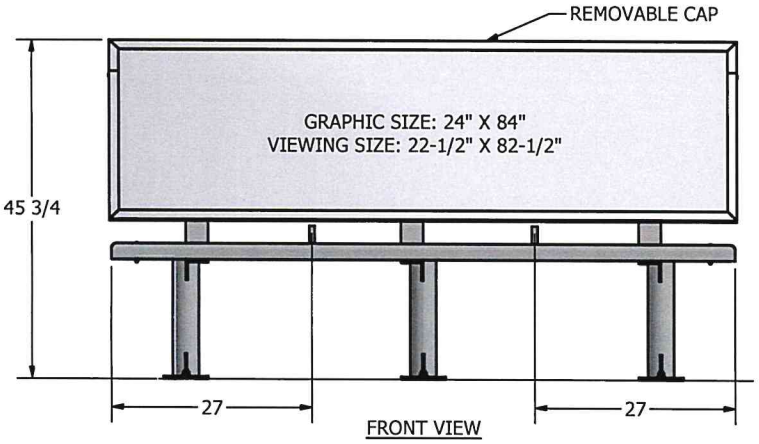

FRONT VIEW

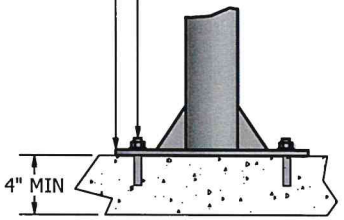

DETAIL A
ANCHORING DETAIL
SCALE 1 / 8

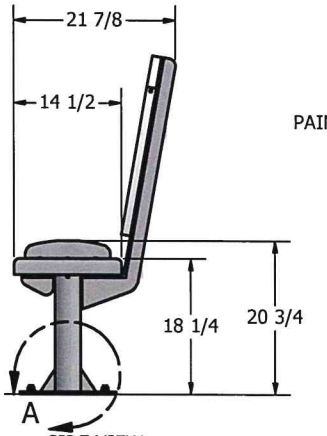

SIDE VIEW

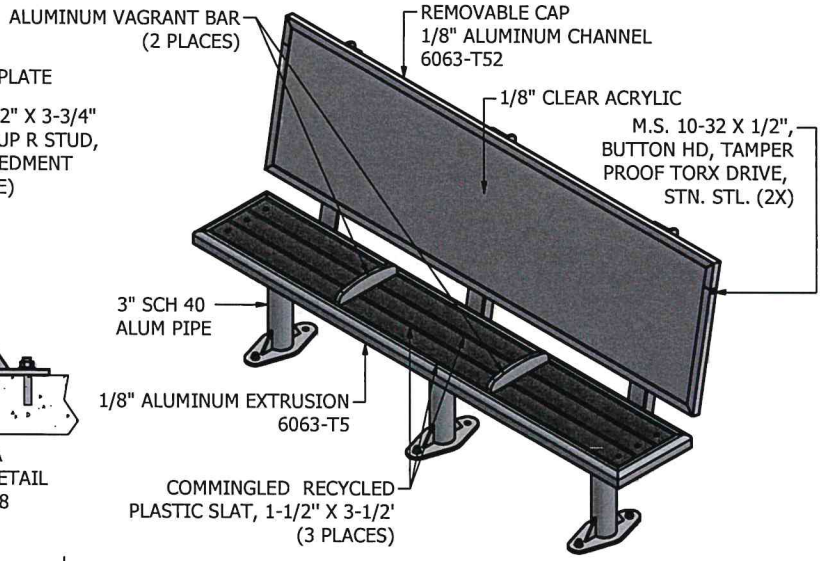

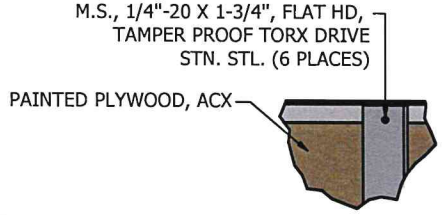

BACK OF AD SHOWN FOR DETAL
SCALE 1/8

TOLAR	Tolar Manufacturing Company, Inc 258 Mariah Circle, Corona CA. 92879		
DESCRIPTION	7' MESA AD BENCH WITH 2 V-BARS		
CUSTOMER/VENDOR	MTS		SHEET NO. 1 OF 1
SIZE B	MATL.	DWG NO. 25659-00	REV. NO.
SCALE 1/16	DATE 7/23/2015	DRAWN BY: MFUENTES	

THE DESIGN AND DRAWINGS REMAIN THE INTELLECTUAL PROPERTY OF **TOLAR MFG.** AND ARE PROTECTED BY LAW. THEY MAY NOT BE ALTERED, REPRODUCED OR USED FOR FABRICATION WITHOUT EXPRESSED WRITTEN CONSENT FROM **TOLAR MFG.**
ALL DOCUMENTS TO BE RETURNED TO TOLAR **MFG.**. AT COMPLETION OF WORK. CONTRACTOR TO SITE VERIFY ALL DETAILS AND DIMENSIONS AND REPORT ANY AND ALL DISCREPANCIES TO **TOLAR MFG.**. BEFORE COMMENCING WITH THAT RELATED PORTION OF THE WORK.

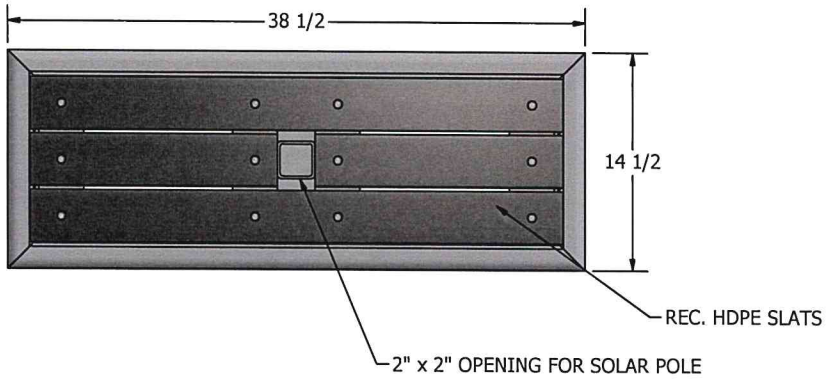

ISO VIEW
SCALE 1/8

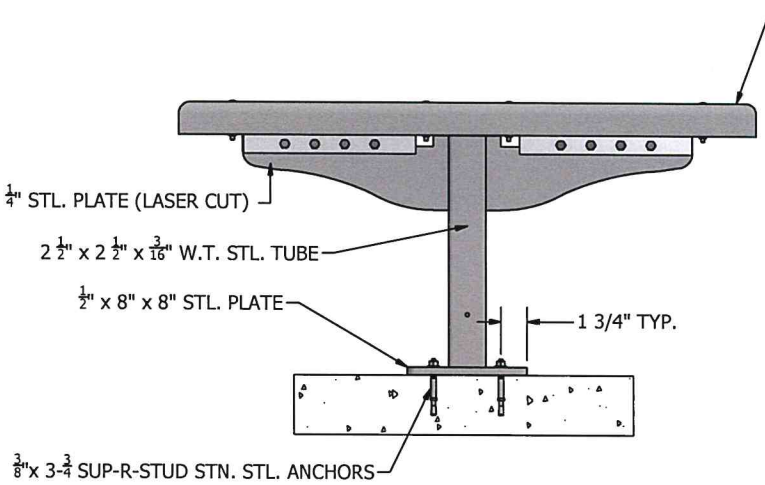

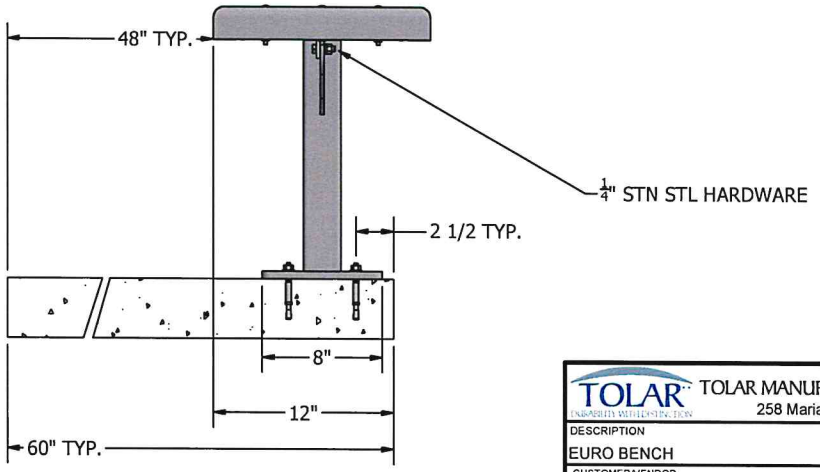

TOLAR MANUFACTURING COMPANY, INC 258 Mariah Circle, Corona CA. 92879			
DESCRIPTION: EURO BENCH			
CUSTOMER/VENDOR: TOLAR STD			PG.: 1 OF 1
SIZE: B	MATL.	DWG NO.: 30413-01	REV: -
SCALE	DATE: 8/16/2017	DRAWN BY: rfarr	

T:\Inventor\Benches\30413-01.idw

REVISION HISTORY				
ZONE	REV	DESCRIPTION	DATE	APPROVED
		SUPERCEDES DWG #1578 REV. B	6/4/07	
	A	ADDED REF. DWG'S	1/17/08	
	B	SIZE CHANGE (REF. #E0270)	8/18/10	VB

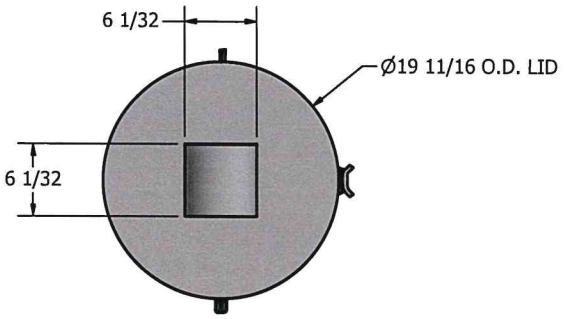

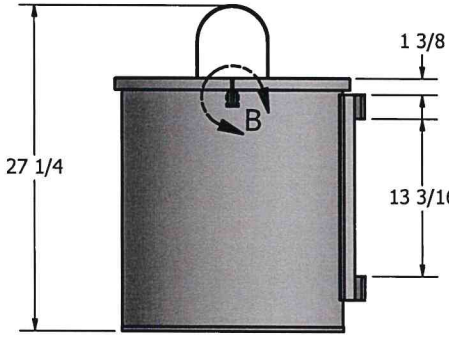

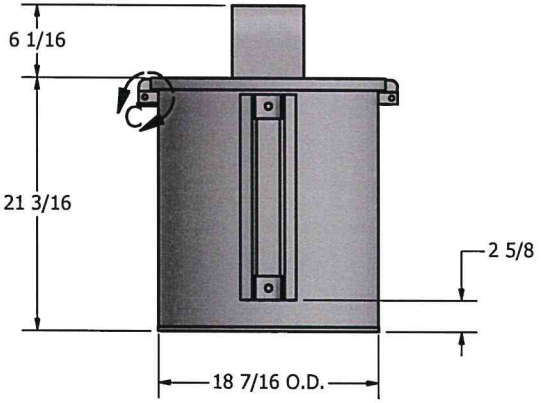

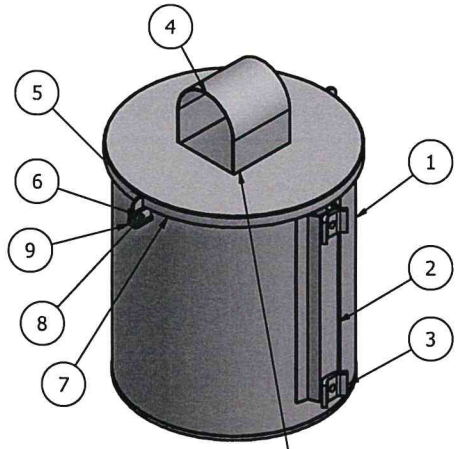

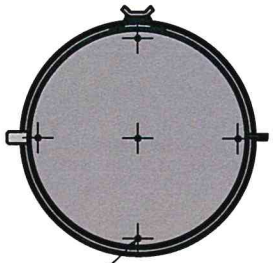

PARTS LIST			
ITEM	QTY	PART NUMBER	DESCRIPTION
1	1	1115020	STEEL DRUM, 20 GAL, 21" HIGH
2	1	1823-01	BRACKET, TRASH CAN CHANNEL
3	2	1824-00	BRACKET, TRASH CAN
4	1	7736-00	WATER DEFLECTOR, TRASH
5	2	7345-00	TOP TRASH CAN LOCK PLATE
6	3	7346-00	BOTTOM TRASH CAN LOCK PLATE
7	1	1345-00	TOP, TRASH RECEP, 20 GAL.
8	1	4030020	ROD, 3/8" O.D., STEEL, 20' LONG HR
9	1	20136-00	TAB, FOR LID SUPPORT

Tolar Manufacturing Company, Inc
258 Mariah Circle, Corona CA. 92879

DESCRIPTION: TRASH CAN 20 GAL SMOOTH, POST MOUNTED

CUSTOMER/VENDOR			SHEET NO.
STD.			1 OF 2
SIZE: B	MATL.: STEEL	DWG NO.: 1578-01	REV. NO.: B
SCALE: 1 / 10	DATE: 2/6/2014	DRAWN BY: mfuentes	

T:\Inventor\Trash Cans\1578-01.idw

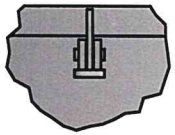

DETAIL B
SCALE 1 / 4

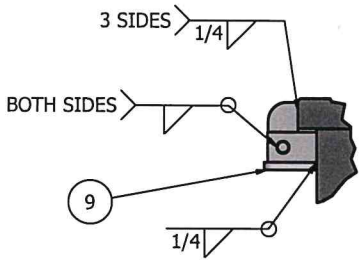

DETAIL C
SCALE 1 / 4

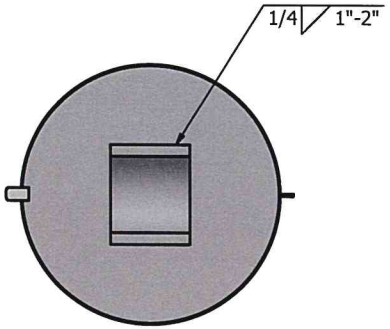

VIEW D-D

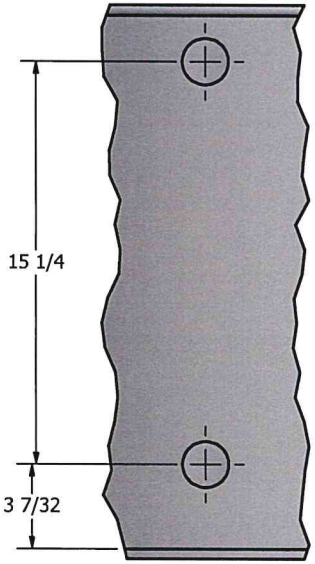

DETAIL F
SCALE 0.22 : 1

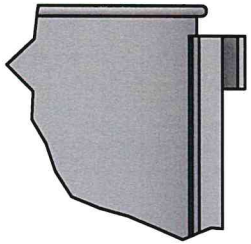

DETAIL E

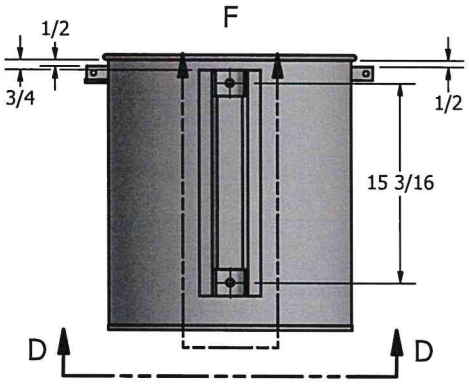

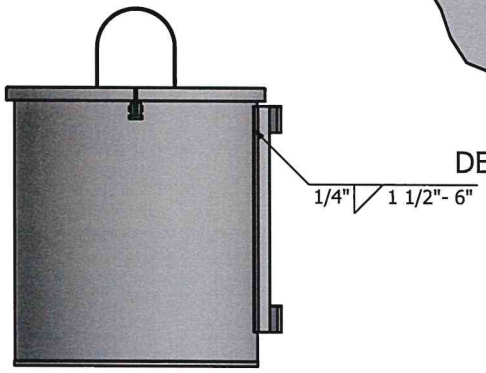

TOLAR	Tolar Manufacturing Company, Inc 258 Mariah Circle, Corona CA. 92879		
DESCRIPTION: TRASH CAN 20 GAL SMOOTH, POST MOUNTED			
CUSTOMER/VENDOR: STD.			SHEET NO.: 2 OF 2
SIZE: B	MATL.: STEEL	DWG NO.: 1578-01	REV. NO.: B
SCALE: 1 / 10	DATE: 2/6/2014	DRAWN BY: mfuentes	

T:\Inventor\Trash Cans\1578-01.idw

UZMAN ENGINEERING
A: 116 E King Street, Malvern, PA 19355
O: 610.320.2100

JOB TITLE 33271-00 Shelter

JOB NO. SC-0163 SHEET NO.
CALCULATED BY DATE
CHECKED BY DATE

CS2018 Ver 2018.11.30 www.struware.com

STRUCTURAL CALCULATIONS

FOR

33271-00 Shelter

Columbia, South Carolina

GENERAL NOTES:

1. ALL STRUCTURAL STEEL, UNLESS OTHERWISE NOTED, SHALL BE ASTM A-36, MINIMUM YIELD STRENGTH 36,000 PSI.
2. ALL STRUCTURAL ALUMINUM MEMBERS, UNLESS OTHERWISE NOTED, SHALL BE OF ALLOY 6063-T5 OR GREATER.
3. ALL HOLES TO BE DRILLED OR PUNCHED.
4. STEEL WELDING SHALL CONFORM TO AMERICAN WELDING SOCIETY STANDARD D1. 1-10. ELECTRODES SHALL CONFORM TO AWS 5.1, CLASS E70S-5.
5. ALUMINUM WELDING SHALL CONFORM TO AMERICAN WELDING SOCIETY STANDARD D1. 2-08. ELECTRODES SHALL CONFORM TO AWS/SFA 5.10 CLASS ER4043.
6. ALL WELDING TO BE DONE AT TOLAR MANUFACTURING COMPANY, INC. FACILITY.
7. ALL CORPORATE PROCEDURES, INCLUDING FABRICATION, MUST BE IN COMPLIANCE WITH TOLAR MANUFACTURING CO. INC'S QUALITY CONTROL MANUAL

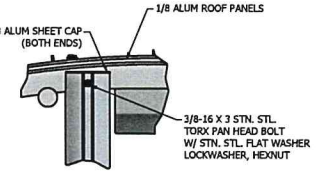

DETAIL H
SCALE 1/6

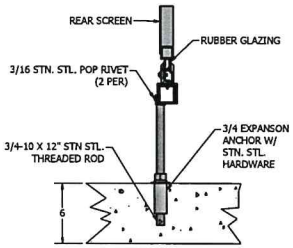

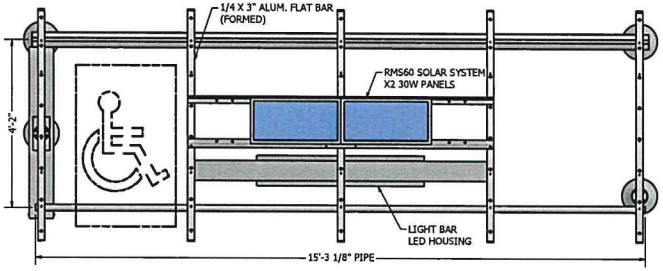

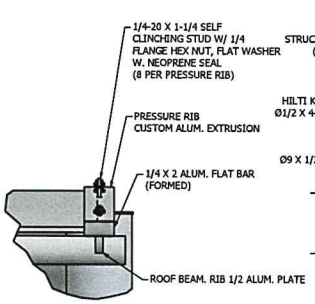

DETAIL B
SCALE 1/4

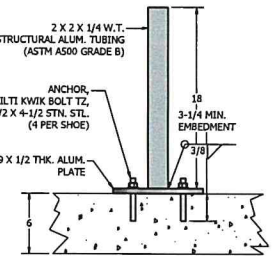

DETAIL F
SCALE 1/6

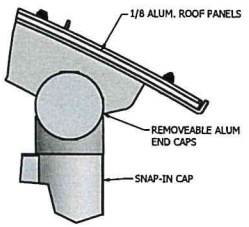

DETAIL C
SCALE 1/4

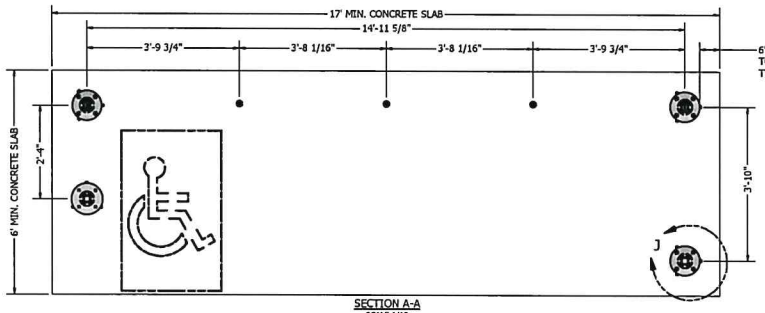

SECTION A-A
SCALE 1/18

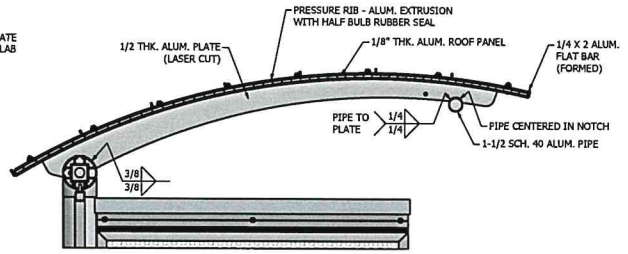

SECTION G-G
SCALE 1/8

SECTION D-D
GLASS SUPPORT
SCALE 1/6

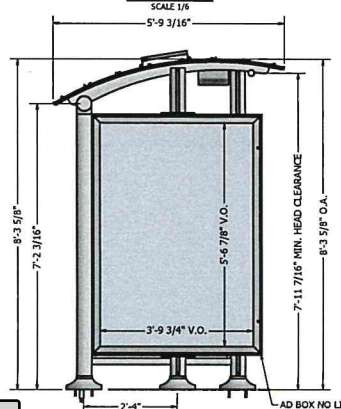

SIDE VIEW
SCALE 1/18

AD BOX NO LIGHTING W/ 3/16 CLEAR TEMP. GLASS IN DOORS

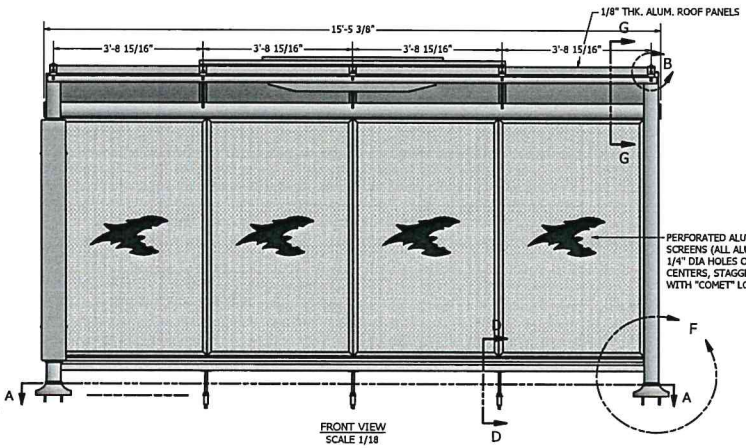

FRONT VIEW
SCALE 1/18

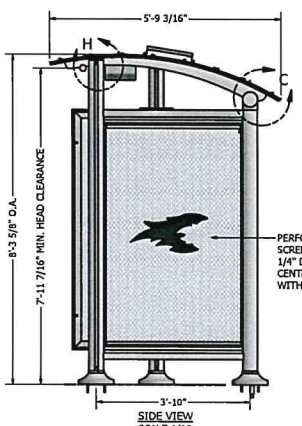

SIDE VIEW
SCALE 1/18

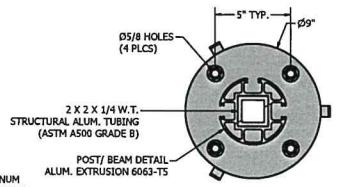

DETAIL J
SCALE 1/4

TOLAR	Tolar Manufacturing Company, Inc 258 Mariah Circle, Corona CA. 92879
DESCRIPTION	16' AD CUSTOM DOME SHELTER
CUSTOMER/VENDOR	COLUMBIA, SC
SIZE	D
MATL.	ALL ALUMINUM
DWG NO.	33271-01
REV. NO.	-
STOCK #	
DATE	5/14/2019
DRAWN BY	RFarr

UZMAN ENGINEERING
A: 116 E King Street, Malvern, PA 19355
O: 610.320.2100

JOB TITLE 33271-00 Shelter

JOB NO. SC-0163 SHEET NO.
CALCULATED BY DATE
CHECKED BY DATE

www.struware.com

Code Search

Code: International Building Code 2015

Occupancy:

Occupancy Group = U Utility & Miscellaneous

Risk Category & Importance Factors:

Risk Category =	II
Wind factor =	1.00
Snow factor =	1.00
Seismic factor =	1.00

Type of Construction:

Fire Rating:

Roof =	0.0 hr
Floor =	0.0 hr

Building Geometry:

Roof angle (θ)	0.00 / 12	0.0 deg
Building length (L)	15.0 ft	
Least width (B)	5.0 ft	
Mean Roof Ht (h)	7.0 ft	
Parapet ht above grd	0.0 ft	
Minimum parapet ht	0.0 ft	

Live Loads:

Roof

0 to 200 sf: 20 psf
200 to 600 sf: 24 - 0.02Area, but not less than 12 psf
over 600 sf: 12 psf

Floor:

Typical Floor
Partitions N/A

UZMAN ENGINEERING
A: 116 E King Street, Malvern, PA 19355
O: 610.320.2100

JOB TITLE 33271-00 Shelter
JOB NO. SC-0163 SHEET NO.
CALCULATED BY DATE
CHECKED BY DATE

Wind Loads : ASCE 7- 10

Ultimate Wind Speed	116 mph
Nominal Wind Speed	89.9 mph
Risk Category	II
Exposure Category	C
Enclosure Classif.	Partially Enclosed
Internal pressure	+/-0.55
Directionality (Kd)	0.85
Kh case 1	0.849
Kh case 2	0.849
Type of roof	Monoslope

Topographic Factor (Kzt)

Topography		Flat
Hill Height	(H)	80.0 ft
Half Hill Length (Lh)		100.0 ft
Actual H/Lh	=	0.80
Use H/Lh	=	0.50
Modified Lh	=	160.0 ft
From top of crest: x =		50.0 ft
Bldg up/down wind?		downwind

H/Lh= 0.50 K_1 = 0.000
x/Lh = 0.31 K_2 = 0.792
z/Lh = 0.09 K_3 = 1.000

At Mean Roof Ht:
Kzt = $(1+K_1K_2K_3)^2$ = 1.00

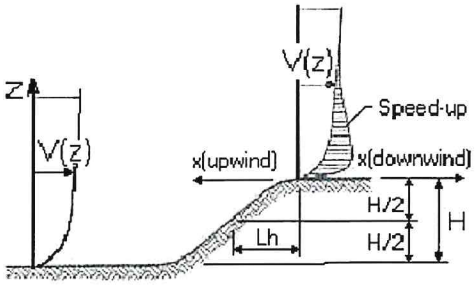

ESCARPMENT

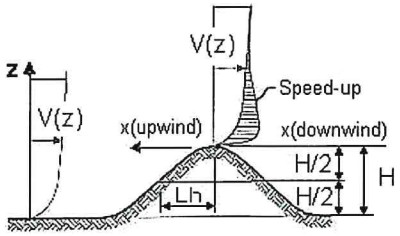

2D RIDGE or 3D AXISYMMETRICAL HILL

Gust Effect Factor

h =	7.0 ft
B =	5.0 ft
/z (0.6h) =	15.0 ft

Flexible structure if natural frequency < 1 Hz (T > 1 second).
If building h/B>4 then may be flexible and should be investigated.
h/B = 1.40

G = 0.85 Using rigid structure default

Rigid Structure

$\bar{e}$ =	0.20
ℓ =	500 ft
z_{min} =	15 ft
c =	0.20
g_Q, g_v =	3.4
L_z =	427.1 ft
Q =	0.97
I_z =	0.23
G =	0.91 use G = 0.85

Flexible or Dynamically Sensitive Structure

34 ιcy (η_1) =	0.0 Hz				
Damping ratio (β) =	0				
/b =	0.65				
/α =	0.15				
Vz =	98.0				
N_1 =	0.00				
R_n =	0.000				
R_h =	28.282	η =	0.000	h =	7.0 ft
R_B =	28.282	η =	0.000		
R_L =	28.282	η =	0.000		
g_R =	0.000				
R =	0.000				
Gf =	0.000				

UZMAN ENGINEERING
A: 116 E King Street, Malvern, PA 19355
O: 610.320.2100

JOB TITLE 33271-00 Shelter

JOB NO. SC-0163 SHEET NO.
CALCULATED BY DATE
CHECKED BY DATE

Enclosure Classification

Test for Enclosed Building: A building that does not qualify as open or partially enclosed.

Test for Open Building: All walls are at least 80% open.
Ao ≥ 0.8Ag

Test for Partially Enclosed Building: Predominately open on one side only

	Input			Test	
Ao	500.0	sf	Ao ≥ 1.1Aoi	NO	
Ag	600.0	sf	Ao > 4' or 0.01Ag	YES	
Aoi	1000.0	sf	Aoi / Agi ≤ 0.20	YES	Building is NOT Partially Enclosed
Agi	10000.0	sf			

Conditions to qualify as Partially Enclosed Building. Must satisfy all of the following:
Ao ≥ 1.1Aoi
Ao > smaller of 4' or 0.01 Ag
Aoi / Agi ≤ 0.20
Where:
Ao = the total area of openings in a wall that receives positive external pressure.
Ag = the gross area of that wall in which Ao is identified.
Aoi = the sum of the areas of openings in the building envelope (walls and roof) not including Ao.
Agi = the sum of the gross surface areas of the building envelope (walls and roof) not including Ag.

Reduction Factor for large volume partially enclosed buildings (Ri) :

If the partially enclosed building contains a single room that is unpartitioned , the internal pressure coefficient may be multiplied by the reduction factor Ri.

Total area of all wall & roof openings (Aog): 0 sf
Unpartitioned internal volume (Vi) : 0 cf
Ri = 1.00

Altitude adjustment to constant 0.00256 (caution - see code) :

Grd level above sea level = 0.0 ft
Constant = 0.00256 Adj Constant = 0.00256
Average Air Density = 0.0765 lbm/ft3

UZMAN ENGINEERING
A: 116 E King Street, Malvern, PA 19355
O: 610.320.2100

JOB TITLE 33271-00 Shelter
JOB NO. SC-0163 SHEET NO.
CALCULATED BY DATE
CHECKED BY DATE

Wind Loads - MWFRS all h (Except for Open Buildings)

Kh (case 2) =	0.85	h =	7.0 ft	GCpi =	+/-0.55
Base pressure (q_h) =	**24.9 psf**	ridge ht =	7.0 ft	G =	0.85
Roof Angle (θ) =	0.0 deg	L =	15.0 ft	z for qi :	7.0 ft
Roof tributary area - (h/2)*L:	53 sf	B =	5.0 ft	qi =	24.9 psf for positive internal pressures
(h/2)*B:	18 sf				

Ultimate Wind Surface Pressures (psf)

	Wind Normal to Ridge				Wind Parallel to Ridge				
	B/L = 0.33		h/L = 1.40		L/B = 3.00		h/L = 0.47		
Surface	Cp	q_hGC_p	w/+q_iGC_{pi}	w/-q_hGC_{pi}	Dist.*	Cp	q_hGC_p	w/ +q_iGC_{pi}	w/ -q_hGC_{pi}
Windward Wall (WW)	0.80	16.9	see table below			0.80	16.9	see table below	
Leeward Wall (LW)	-0.50	-10.6	-24.2	3.1		-0.25	-5.3	-19.0	8.4
Side Wall (SW)	-0.70	-14.8	-28.5	-1.1		-0.70	-14.8	-28.5	-1.1
Leeward Roof (LR)		**				Included in windward roof			
Neg Windward Roof: 0 to h/2*	-1.30	-27.5	-41.1	-13.8	0 to h/2*	-0.90	-19.0	-32.7	-5.3
> h/2*	-0.70	-14.8	-28.5	-1.1	h/2 to h*	-0.90	-19.0	-32.7	-5.3
					h to 2h*	-0.50	-10.6	-24.2	3.1
					> 2h*	-0.30	-6.3	-20.0	7.3
Pos/min windward roof press.	-0.18	-3.8	-17.5	9.9	Min press.	-0.18	-3.8	-17.5	9.9

**Roof angle < 10 degrees. Therefore, leeward roof is included in windward roof pressure zones.

*Horizontal distance from windward edge

For monoslope roofs, entire roof surface is either windward or leeward surface.

Windward Wall Pressures at "z" (psf)

	z	Kz	Kzt	Windward Wall q_zGC_p	Windward Wall w/+q_iGC_{pi}	Windward Wall w/-q_hGC_{pi}	Combined WW + LW Normal to Ridge	Combined WW + LW Parallel to Ridge
h=	0 to 15'	0.85	1.00	16.9	3.2	30.6	27.5	22.2

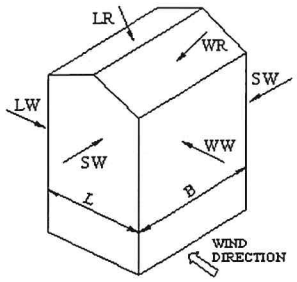

WIND NORMAL TO RIDGE

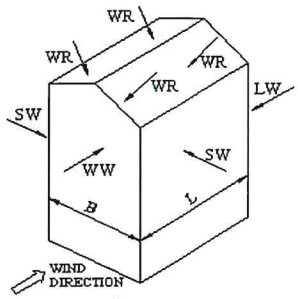

WIND PARALLEL TO RIDGE

NOTE:
See figure in ASCE7 for the application of full and partial loading of the above wind pressures. There are 4 different loading cases.

Parapet

z	Kz	Kzt	qp (psf)
0.0 ft	0.85	1.00	0.0

Windward parapet: 0.0 psf (GCpn = +1.5)
Leeward parapet: 0.0 psf (GCpn = -1.0)

Windward roof overhangs (add to windward roof pressure) : 16.9 psf (upward)

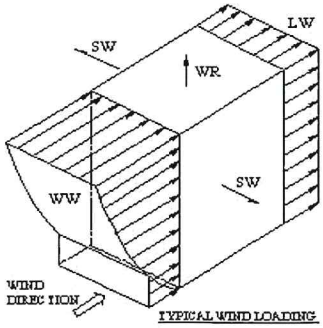

TYPICAL WIND LOADING

UZMAN ENGINEERING
A: 116 E King Street, Malvern, PA 19355
O: 610.320.2100

JOB TITLE 33271-00 Shelter
JOB NO. SC-0163 SHEET NO.
CALCULATED BY DATE
CHECKED BY DATE

Snow Loads : ASCE 7-10

Nominal Snow Forces

Roof slope		=	0.0 deg
Horiz. eave to ridge dist (W)		=	5.0 ft
Roof length parallel to ridge (L)		=	15.0 ft
Type of Roof			Monoslope
Ground Snow Load	Pg	=	10.0 psf
Risk Category		=	II
Importance Factor	I	=	1.0
Thermal Factor	Ct	=	1.20
Exposure Factor	Ce	=	1.2
Pf = 0.7*Ce*Ct*I*Pg		=	10.1 psf
Unobstructed Slippery Surface			no
Sloped-roof Factor	Cs	=	1.00
Balanced Snow Load		=	**10.1 psf**
Rain on Snow Surcharge Angle			0.10 deg
Code Maximum Rain Surcharge			5.0 psf
Rain on Snow Surcharge		=	5.0 psf
Ps plus rain surcharge		=	15.1 psf
Minimum Snow Load	Pm	=	10.0 psf
Uniform Roof Design Snow Load		=	**15.1 psf**

Near ground level surface balanced snow load = **10.0 psf**

NOTE: Alternate spans of continuous beams shall be loaded with half the design roof snow load so as to produce the greatest possible effect - see code for loading diagrams and exceptions for gable roofs..

Windward Snow Drifts 1 - Against walls, parapets, etc

Upwind fetch	lu	=	0.0 ft
Projection height	h	=	0.0 ft
Snow density	g	=	15.3 pcf
Balanced snow height	hb	=	0.66 ft
	hd	=	0.73 ft
	hc	=	-0.66 ft
hc/hb <0.2 = -1.0	**lu<15', drift not req'd**		
Drift height (hc)		=	0.00 ft
Drift width	w	=	-5.27 ft
Surcharge load:	pd = γ*hd	=	**0.0 psf**
Balanced Snow load:		=	10.1 psf
			10.1 psf

Windward Snow Drifts 2 - Against walls, parapets, etc

Upwind fetch	lu	=	0.0 ft
Projection height	h	=	0.0 ft
Snow density	g	=	15.3 pcf
Balanced snow height	hb	=	0.66 ft
	hd	=	0.73 ft
	hc	=	-0.66 ft
hc/hb <0.2 = -1.0	**lu<15', drift not req'd**		
Drift height (hc)		=	0.00 ft
Drift width	w	=	-5.27 ft
Surcharge load:	pd = γ*hd	=	**0.0 psf**
Balanced Snow load:		=	10.1 psf
			10.1 psf

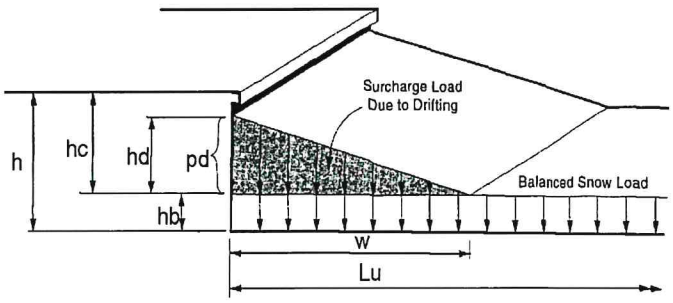

UZMAN ENGINEERING
A: 116 E King Street, Malvern, PA 19355
O: 610.320.2100

JOB TITLE 33271-00 Shelter

JOB NO. SC-0163 SHEET NO.
CALCULATED BY DATE
CHECKED BY DATE

Design Loads:

D =	10 psf
Lr =	20 psf
S =	15 psf
W =	-32.7 psf

Aluminium Type: 6061-T6

F_y = 35,000 psi
E = ######## psi

Load Combinations:

D+Lr =	30.0 psf
D+S =	25.1 psf
D+0.6W =	-9.6 psf
D+0.75Lr+0.45W =	10.3 psf
D+0.75S+0.45W =	6.6 psf
0.6D+0.6W=	-13.6 psf

Decking

L =	4.00 ft	Fy = 3021.1 psi	OK
Trib Width =	1.00 ft		
		Limit = 0.274 in	L/175
Mmax =	60.00 ft-lb	D = 0.145 in	OK
Vmax =	60.00 lb		
I =	0.0492 in^4	Section = 1/8" Aluminium panel System	
y =	0.125 in		
S =	0.39323 in^3		

Rear Header:

L =	15 ft	Fy = 4459.0 psi	OK
Trib Width =	2.50 ft		
		Limit = 1.029 in	L/175
Mmax =	2109.38 ft-lb	D = 0.301 in	OK
Vmax =	562.50 lb		
I =	28.1 in^4	Section = 6" Tube	
y =	3 in		
S =	9.36667 in^3		

UZMAN ENGINEERING
A: 116 E King Street, Malvern, PA 19355
O: 610.320.2100

JOB TITLE 33271-00 Shelter

JOB NO. SC-0163 SHEET NO.
CALCULATED BY DATE
CHECKED BY DATE

Front Header:

L =	15	ft	Fy =	11553.4 psi	OK
Trib Width =	2.50	ft			
			Limit =	1.500 in	L/120
Mmax =	2109.38	ft-lb	D =	1.170 in	OK
Vmax =	562.50	lb			
I =	7.23	in^4	Section = 4" Tube		
y =	2	in			
S =	3.615	in^3			

UZMAN ENGINEERING
A: 116 E King Street, Malvern, PA 19355
O: 610.320.2100

Column: 4" Tube

Height =	7.1	ft			
Trib Width =	7.5	ft			
Trib Depth =	2.500	ft			
Defl Limit =	L/120	=	0.71	in	
DL =	0	psf			
WL =	18	psf			
w_{total} =	138	psf			
End Rxn's =	487	lbs			
Moment =	863	ft-lb	=	10354	in-lb
					Provided OK?
Sx >=	0.2	in^3	3.21	in^3	OK
Ix >=	0.7	in^4	7.23	in^4	OK
Axial Force =	563	lb			
Moment M_x =	863	lb-ft			
Moment M_y =	288	lb-ft			

k =	1	F_{ex} =	31458 psi
L_x =	7.083 ft	λ =	56
L_y =	7.083 ft	F_{cy} =	35000 psi
r_x =	1.51 in	B_c =	307222
r_y =	1.51 in	D_c =	5358
kL/r_x =	56	C_c =	24
kL/r_y =	56	λ_1 =	51
		λ_2 =	24

Limit State = YIELDING

F_c =	35000	psi
A_g =	3.2	in^2
P_{nc} =	67242.4	lb
F_b =	21212	psi
S_{xc} =	3.21	in^3
M_{nx} =	5674	lb-ft
S_{yc} =	3.21	in^3
M_{ny} =	5674	lb-ft

Interaction 0.21 <= 1 OK

Base Plate Design:

P =	563	lb	Area =	18.75	ft^2
Bearing Area =	64.0	in^2	Uplift =	-255.2	lb
f_{brg} =	9	psi	OK	t =	0.06 in
F_{brg} =	1,000	psi	Actual t =	0.5	in OK

www.hilti.us

Profis Anchor 2.8.0

Company:		Page:	1
Specifier:		Project:	
Address:		Sub-Project I Pos. No.:	
Phone I Fax:	|	Date:	5/24/2019
E-Mail:			

Specifier's comments:

1 Input data

Anchor type and diameter:	**Kwik Bolt TZ - SS 304 1/2 (2)**
Effective embedment depth:	h_{ef} = 2.000 in., h_{nom} = 2.375 in.
Material:	AISI 304
Evaluation Service Report:	ESR-1917
Issued I Valid:	4/1/2018 | 5/1/2019
Proof:	Design method ACI 318 / AC193
Stand-off installation:	e_b = 0.000 in. (no stand-off); t = 0.500 in.
Anchor plate:	l_x x l_y x t = 9.000 in. x 9.000 in. x 0.500 in.; (Recommended plate thickness: not calculated
Profile:	Round HSS, Steel pipe (AISC); (L x W x T) = 4.000 in. x 4.000 in. x 0.125 in.
Base material:	cracked concrete, 2500, f_c' = 2,500 psi; h = 6.000 in.
Reinforcement:	tension: condition B, shear: condition B; no supplemental splitting reinforcement present edge reinforcement: none or < No. 4 bar
Seismic loads (cat. C, D, E, or F)	no

R - The anchor calculation is based on a rigid baseplate assumption.

Geometry [in.] & Loading [lb, in.lb]

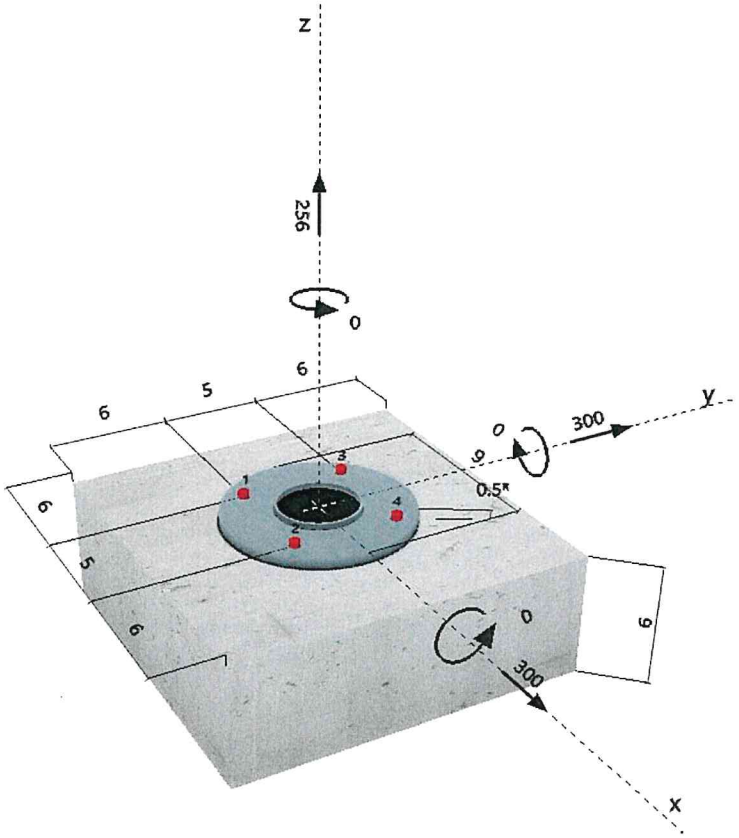

Company:
Specifier:
Address:
Phone I Fax: |
E-Mail:

Page: 2
Project:
Sub-Project I Pos. No.:
Date: 5/24/2019

2 Load case/Resulting anchor forces

Load case: Design loads

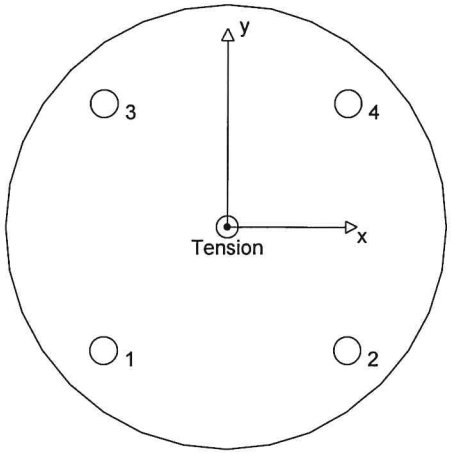

Anchor reactions [lb]
Tension force: (+Tension, -Compression)

Anchor	Tension force	Shear force	Shear force x	Shear force y
1	64	106	75	75
2	64	106	75	75
3	64	106	75	75
4	64	106	75	75

max. concrete compressive strain:	- [‰]
max. concrete compressive stress:	- [psi]
resulting tension force in (x/y)=(0.000/0.000):	256 [lb]
resulting compression force in (x/y)=(0.000/0.000):	0 [lb]

Anchor forces are calculated based on the assumption of a rigid baseplate.

3 Tension load

	Load N_{ua} [lb]	Capacity ϕN_n [lb]	Utilization $\beta_N = N_{ua}/\phi N_n$	Status
Steel Strength*	64	8,665	1	OK
Pullout Strength*	64	1,749	4	OK
Concrete Breakout Strength**	256	6,274	5	OK

* anchor having the highest loading **anchor group (anchors in tension)

3.1 Steel Strength

N_{sa} = ESR value refer to ICC-ES ESR-1917
$\phi N_{sa} \geq N_{ua}$ ACI 318-08 Eq. (D-1)

Variables

$A_{se,N}$ [in.^{2}]	f_{uta} [psi]
0.10	115,000

Calculations

N_{sa} [lb]
11,554

Results

N_{sa} [lb]	ϕ_{steel}	ϕN_{sa} [lb]	N_{ua} [lb]
11,554	0.750	8,665	64

Input data and results must be checked for agreement with the existing conditions and for plausibility!
PROFIS Anchor (c) 2003-2009 Hilti AG, FL-9494 Schaan Hilti is a registered Trademark of Hilti AG, Schaan

Company:		Page:	3
Specifier:		Project:	
Address:		Sub-Project I Pos. No.:	
Phone I Fax:	|	Date:	5/24/2019
E-Mail:			

3.2 Pullout Strength

$N_{pn,f_c} = N_{p,2500} \sqrt{\frac{f_c'}{2500}}$ refer to ICC-ES ESR-1917

$\phi\ N_{pn,f_c} \geq N_{ua}$ ACI 318-08 Eq. (D-1)

Variables

f_c' [psi]	$N_{p,2500}$ [lb]
2,500	3,180

Calculations

$\sqrt{\frac{f_c'}{2500}}$
1.000

Results

N_{pn,f_c} [lb]	ϕ concrete	$\phi\ N_{pn,f_c}$ [lb]	N_{ua} [lb]
3,180	0.550	1,749	64

3.3 Concrete Breakout Strength

$N_{cbg} = \left(\frac{A_{Nc}}{A_{Nc0}}\right) \Psi_{ec,N}\ \Psi_{ed,N}\ \Psi_{c,N}\ \Psi_{cp,N}\ N_b$ ACI 318-08 Eq. (D-5)

$\phi\ N_{cbg} \geq N_{ua}$ ACI 318-08 Eq. (D-1)

A_{Nc} see ACI 318-08, Part D.5.2.1, Fig. RD.5.2.1(b)

$A_{Nc0} = 9\ h_{ef}^2$ ACI 318-08 Eq. (D-6)

$\Psi_{ec,N} = \left(\frac{1}{1 + \frac{2\ e_N'}{3\ h_{ef}}}\right) \leq 1.0$ ACI 318-08 Eq. (D-9)

$\Psi_{ed,N} = 0.7 + 0.3 \left(\frac{c_{a,min}}{1.5 h_{ef}}\right) \leq 1.0$ ACI 318-08 Eq. (D-11)

$\Psi_{cp,N} = \text{MAX}\left(\frac{c_{a,min}}{c_{ac}}, \frac{1.5 h_{ef}}{c_{ac}}\right) \leq 1.0$ ACI 318-08 Eq. (D-13)

$N_b = k_c\ \lambda\ \sqrt{f_c'}\ h_{ef}^{1.5}$ ACI 318-08 Eq. (D-7)

Variables

h_{ef} [in.]	$e_{c1,N}$ [in.]	$e_{c2,N}$ [in.]	$c_{a,min}$ [in.]	$\Psi_{c,N}$
2.000	0.000	0.000	6.000	1.000

c_{ac} [in.]	k_c	λ	f_c' [psi]
4.500	24	1	2,500

Calculations

A_{Nc} [in.^{2}]	A_{Nc0} [in.^{2}]	$\Psi_{ec1,N}$	$\Psi_{ec2,N}$	$\Psi_{ed,N}$	$\Psi_{cp,N}$	N_b [lb]
121.00	36.00	1.000	1.000	1.000	1.000	3,394

Results

N_{cbg} [lb]	ϕ concrete	$\phi\ N_{cbg}$ [lb]	N_{ua} [lb]
11,408	0.550	6,274	256

Input data and results must be checked for agreement with the existing conditions and for plausibility!
PROFIS Anchor (c) 2003-2009 Hilti AG, FL-9494 Schaan Hilti is a registered Trademark of Hilti AG, Schaan

Company:		Page:	4
Specifier:		Project:	
Address:		Sub-Project I Pos. No.:	
Phone I Fax:	|	Date:	5/24/2019
E-Mail:			

4 Shear load

	Load V_{ua} [lb]	Capacity ϕV_n [lb]	Utilization $\beta_V = V_{ua}/\phi V_n$	Status
Steel Strength*	106	4,472	3	OK
Steel failure (with lever arm)*	N/A	N/A	N/A	N/A
Pryout Strength**	424	7,986	6	OK
Concrete edge failure in direction x+**	424	2,591	17	OK

* anchor having the highest loading **anchor group (relevant anchors)

4.1 Steel Strength

V_{sa} = ESR value refer to ICC-ES ESR-1917

$\phi V_{steel} \geq V_{ua}$ ACI 318-08 Eq. (D-2)

Variables

$A_{se,V}$ [in.^{2}]	f_{uta} [psi]
0.10	115,000

Calculations

V_{sa} [lb]
6,880

Results

V_{sa} [lb]	ϕ steel	ϕV_{sa} [lb]	V_{ua} [lb]
6,880	0.650	4,472	106

4.2 Pryout Strength

$V_{cpg} = k_{cp}\left[\left(\frac{A_{Nc}}{A_{Nc0}}\right)\psi_{ec,N}\,\psi_{ed,N}\,\psi_{c,N}\,\psi_{cp,N}\,N_b\right]$ ACI 318-08 Eq. (D-31)

$\phi V_{cpg} \geq V_{ua}$ ACI 318-08 Eq. (D-2)

A_{Nc} see ACI 318-08, Part D.5.2.1, Fig. RD.5.2.1(b)

$A_{Nc0} = 9 h_{ef}^2$ ACI 318-08 Eq. (D-6)

$\psi_{ec,N} = \left(\frac{1}{1 + \frac{2 e'_N}{3 h_{ef}}}\right) \leq 1.0$ ACI 318-08 Eq. (D-9)

$\psi_{ed,N} = 0.7 + 0.3\left(\frac{c_{a,min}}{1.5 h_{ef}}\right) \leq 1.0$ ACI 318-08 Eq. (D-11)

$\psi_{cp,N} = \text{MAX}\left(\frac{c_{a,min}}{c_{ac}}, \frac{1.5 h_{ef}}{c_{ac}}\right) \leq 1.0$ ACI 318-08 Eq. (D-13)

$N_b = k_c \lambda \sqrt{f'_c}\, h_{ef}^{1.5}$ ACI 318-08 Eq. (D-7)

Variables

k_{cp}	h_{ef} [in.]	$e_{c1,N}$ [in.]	$e_{c2,N}$ [in.]	$c_{a,min}$ [in.]
1	2.000	0.000	0.000	6.000

$\psi_{c,N}$	c_{ac} [in.]	k_c	λ	f'_c [psi]
1.000	4.500	24	1	2,500

Calculations

A_{Nc} [in.^{2}]	A_{Nc0} [in.^{2}]	$\psi_{ec1,N}$	$\psi_{ec2,N}$	$\psi_{ed,N}$	$\psi_{cp,N}$	N_b [lb]
121.00	36.00	1.000	1.000	1.000	1.000	3,394

Results

V_{cpg} [lb]	ϕ concrete	ϕV_{cpg} [lb]	V_{ua} [lb]
11,408	0.700	7,986	424

Input data and results must be checked for agreement with the existing conditions and for plausibility!
PROFIS Anchor (c) 2003-2009 Hilti AG, FL-9494 Schaan Hilti is a registered Trademark of Hilti AG, Schaan

Company:		Page:	5
Specifier:		Project:	
Address:		Sub-Project I Pos. No.:	
Phone I Fax:	|	Date:	5/24/2019
E-Mail:			

4.3 Concrete edge failure in direction x+

$V_{cbg} = \left(\frac{A_{Vc}}{A_{Vc0}}\right) \psi_{ec,V} \psi_{ed,V} \psi_{c,V} \psi_{h,V} \psi_{parallel,V} V_b$ ACI 318-08 Eq. (D-22)

$\phi V_{cbg} \geq V_{ua}$ ACI 318-08 Eq. (D-2)

A_{Vc} see ACI 318-08, Part D.6.2.1, Fig. RD.6.2.1(b)

$A_{Vc0} = 4.5 c_{a1}^2$ ACI 318-08 Eq. (D-23)

$\psi_{ec,V} = \left(\frac{1}{1 + \frac{2e'_v}{3c_{a1}}}\right) \leq 1.0$ ACI 318-08 Eq. (D-26)

$\psi_{ed,V} = 0.7 + 0.3\left(\frac{c_{a2}}{1.5c_{a1}}\right) \leq 1.0$ ACI 318-08 Eq. (D-28)

$\psi_{h,V} = \sqrt{\frac{1.5c_{a1}}{h_a}} \geq 1.0$ ACI 318-08 Eq. (D-29)

$V_b = \left(7\left(\frac{l_e}{d_a}\right)^{0.2}\sqrt{d_a}\right) \lambda \sqrt{f'_c}\, c_{a1}^{1.5}$ ACI 318-08 Eq. (D-24)

Variables

c_{a1} [in.]	c_{a2} [in.]	e_{cV} [in.]	$\psi_{c,V}$	h_a [in.]
4.000	6.000	0.000	1.000	6.000

l_e [in.]	λ	d_a [in.]	f'_c [psi]	$\psi_{parallel,V}$
2.000	1.000	0.500	2,500	1.000

Calculations

A_{Vc} [in.^{2}]	A_{Vc0} [in.^{2}]	$\psi_{ec,V}$	$\psi_{ed,V}$	$\psi_{h,V}$	V_b [lb]
102.00	72.00	1.000	1.000	1.000	2,612

Results

V_{cbg} [lb]	$\phi_{concrete}$	ϕV_{cbg} [lb]	V_{ua} [lb]
3,701	0.700	2,591	424

5 Combined tension and shear loads

β_N	β_V	ζ	Utilization $\beta_{N,V}$ [%]	Status
0.041	0.164	5/3	6	OK

$\beta_{NV} = \beta_N^{\zeta} + \beta_V^{\zeta} <= 1$

6 Warnings

- The anchor design methods in PROFIS Anchor require rigid anchor plates per current regulations (ETAG 001/Annex C, EOTA TR029, etc.). This means load re-distribution on the anchors due to elastic deformations of the anchor plate are not considered - the anchor plate is assumed to be sufficiently stiff, in order not to be deformed when subjected to the design loading. PROFIS Anchor calculates the minimum required anchor plate thickness with FEM to limit the stress of the anchor plate based on the assumptions explained above. The proof if the rigid base plate assumption is valid is not carried out by PROFIS Anchor. Input data and results must be checked for agreement with the existing conditions and for plausibility!
- Condition A applies when supplementary reinforcement is used. The Φ factor is increased for non-steel Design Strengths except Pullout Strength and Pryout strength. Condition B applies when supplementary reinforcement is not used and for Pullout Strength and Pryout Strength. Refer to your local standard.
- Refer to the manufacturer's product literature for cleaning and installation instructions.
- Checking the transfer of loads into the base material and the shear resistance are required in accordance with ACI 318 or the relevant standard!

Fastening meets the design criteria!

PROFIS Anchor (c) 2003-2009 Hilti AG, FL-9494 Schaan Hilti is a registered Trademark of Hilti AG, Schaan

Company:		Page:	6
Specifier:		Project:	
Address:		Sub-Project I Pos. No.:	
Phone I Fax:	|	Date:	5/24/2019
E-Mail:			

7 Installation data

Anchor plate, steel: -
Profile: Round HSS, Steel pipe (AISC); 4.000 x 4.000 x 0.125 in.
Hole diameter in the fixture: d_f = 0.563 in.
Plate thickness (input): 0.500 in.
Recommended plate thickness: not calculated
Drilling method: Hammer drilled
Cleaning: Manual cleaning of the drilled hole according to instructions for use is required.

Anchor type and diameter: Kwik Bolt TZ - SS 304 1/2 (2)
Installation torque: 480.001 in.lb
Hole diameter in the base material: 0.500 in.
Hole depth in the base material: 2.625 in.
Minimum thickness of the base material: 6.000 in.

7.1 Recommended accessories

Drilling	Cleaning	Setting
• Suitable Rotary Hammer • Properly sized drill bit	• Manual blow-out pump	• Torque controlled cordless impact tool (Hilti Safeset System) • Torque wrench • Hammer

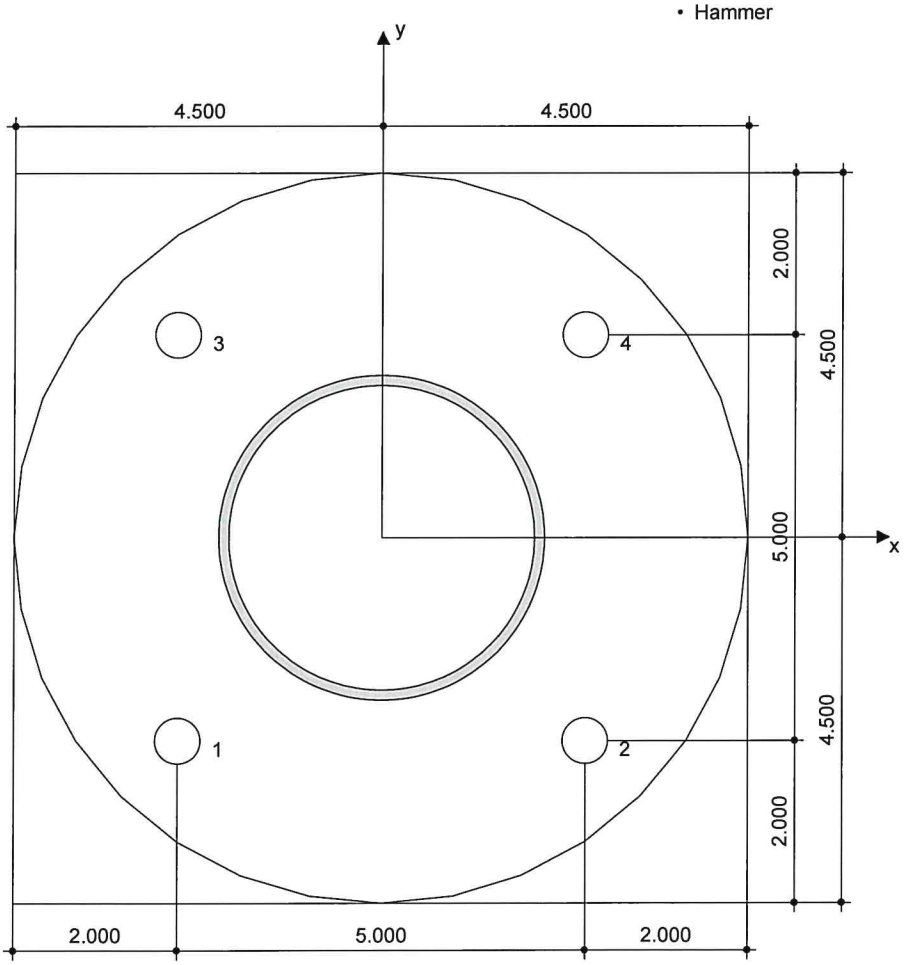

Coordinates Anchor in.

Anchor	x	y	c_{-x}	c_{+x}	c_{-y}	c_{+y}
1	-2.500	-2.500	6.000	11.000	6.000	11.000
2	2.500	-2.500	11.000	6.000	6.000	11.000
3	-2.500	2.500	6.000	11.000	11.000	6.000
4	2.500	2.500	11.000	6.000	11.000	6.000

Input data and results must be checked for agreement with the existing conditions and for plausibility!
PROFIS Anchor (c) 2003-2009 Hilti AG, FL-9494 Schaan Hilti is a registered Trademark of Hilti AG, Schaan

Company:		Page:	7
Specifier:		Project:	
Address:		Sub-Project I Pos. No.:	
Phone I Fax:	|	Date:	5/24/2019
E-Mail:			

8 Remarks; Your Cooperation Duties

- Any and all information and data contained in the Software concern solely the use of Hilti products and are based on the principles, formulas and security regulations in accordance with Hilti's technical directions and operating, mounting and assembly instructions, etc., that must be strictly complied with by the user. All figures contained therein are average figures, and therefore use-specific tests are to be conducted prior to using the relevant Hilti product. The results of the calculations carried out by means of the Software are based essentially on the data you put in. Therefore, you bear the sole responsibility for the absence of errors, the completeness and the relevance of the data to be put in by you. Moreover, you bear sole responsibility for having the results of the calculation checked and cleared by an expert, particularly with regard to compliance with applicable norms and permits, prior to using them for your specific facility. The Software serves only as an aid to interpret norms and permits without any guarantee as to the absence of errors, the correctness and the relevance of the results or suitability for a specific application.
- You must take all necessary and reasonable steps to prevent or limit damage caused by the Software. In particular, you must arrange for the regular backup of programs and data and, if applicable, carry out the updates of the Software offered by Hilti on a regular basis. If you do not use the AutoUpdate function of the Software, you must ensure that you are using the current and thus up-to-date version of the Software in each case by carrying out manual updates via the Hilti Website. Hilti will not be liable for consequences, such as the recovery of lost or damaged data or programs, arising from a culpable breach of duty by you.

PROFIS Anchor (c) 2003-2009 Hilti AG, FL-9494 Schaan Hilti is a registered Trademark of Hilti AG, Schaan

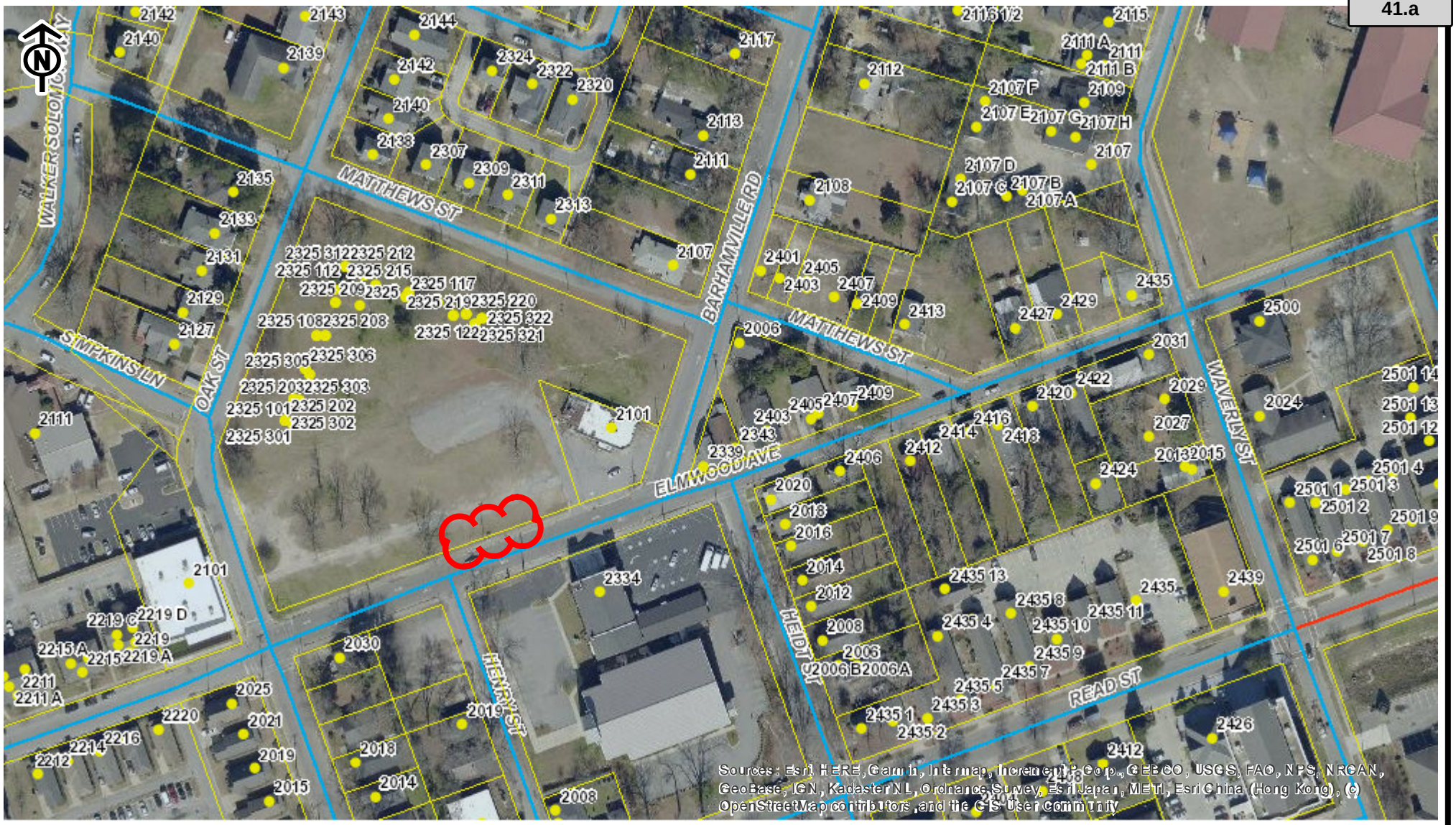

Comet Bus Shelter

City of Columbia

We Are Columbia

This map was prepared using the City GIS Viewer:

City of Columbia - GIS Division
Friday, September 27, 2019

- Address Point
- Tax Parcel

Street Ownership

- City of Columbia
- State
- County
- Federal
- Private
- University of South Carolina
- Working
- Interstates

Highways

- US
- SC
- Arterial Streets
- Columbia City Limits
- Red: Red
- Green: Green
- Blue: Blue

0 0.02 0.04 0.08 mi

CITY OF COLUMBIA
GIS DATA DISCLAIMER:
The City of Columbia GIS data represented on this map or plan is the product of the compilation of data produced by others. It is provided for informational purposes only and the City of Columbia makes no representation as to its accuracy. Its use without field verification is at the sole risk

BUS STOP #304
BARHAMVILLE ROAD
AND ELMWOOD AVENUE

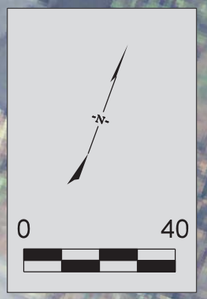

* TIE PROPOSED CONCRETE PAD FLUSH WITH THE BACK OF EXISTING SIDEWALK. PAD MUST HAVE A TRANSVERSE SLOPE NO LESS THAN 50:1 AND NO GREATER THAN 12:1. THE LONGITUDINAL SLOPE OF THE NEW PAD SHALL MATCH THE LONGITUDINAL SLOPE OF THE EXISTING SIDEWALK.
* SHELTER PAD SHALL BE 6" THICK.
* SEE SHOP DRAWINGS FOR ALL DETAILS AND DIMENSIONS OF BENCH, CONCRETE PAD, AND TRASH CAN.
* BENCH AND TRASH CAN TO BE MAINTAINED BY THE COMET.
* MOUNT NEW TRASH CAN TO NEW BUS STOP SIGN.

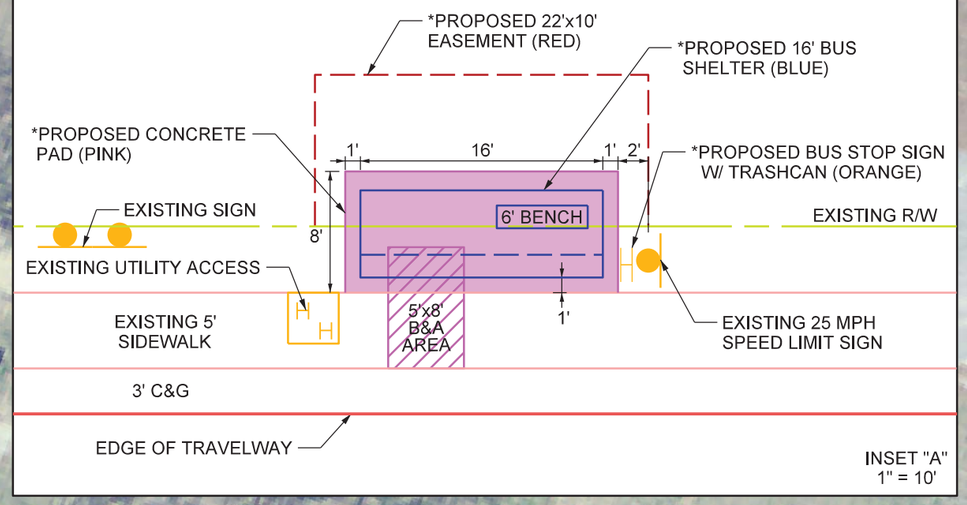

℄ OAK STREET

PROPOSED 16' BUS SHELTER W/ TRASH CAN (SEE INSET "A")

EXISTING R/W DEED BK 1853 PG 3336

EXISTING BUS STOP SIGN RELOCATE TO NEW SHELTER LOCATION

℄ BARHAMVILLE ROAD

℄ ELMWOOD AVENUE

15FT FROM EDGE OF TRAVELWAY

280FT REQUIRED SIGHT DISTANCE FOR VEHICLES APPROACHING FROM THE RIGHT FOR 25 MPH DESIGN SPEED AND PASSENGER CAR DESIGN VEHICLE

REQUEST FOR A PERMANENT COMMERCIAL ENCROACHMENT ORDINANCE (INCLUDING OUTDOOR DINING/LANDSCAPING/STUDENT HOUSING)

For a continuing encroachment on any type of property in which the City has an interest (i.e., rights of way, tree zone, sidewalk, streets), the person or entity is required to have an encroachment ordinance enacted by City Council permitting the encroachment. Encroachment ordinances are required for but not limited to: irrigation systems; landscaping; fencing; walls; pavers; walkways; outdoor dining items (chairs, tables, umbrellas, etc.); awnings; bollards and directional signs (i.e., churches) Business signs are NOT permitted via an encroachment. Encroachments must comply with all existing City codes, rules and regulations, the Americans with Disabilities Act, if applicable, and are subject to review and approval by City staff. Enactment of the encroachment ordinance by a majority vote of City Council, which is a discretionary legislative act, is also required. In order to obtain an encroachment ordinance from the City of Columbia, it will be necessary for the City of Columbia to be named as an additional insured on your insurance policy with limits being increased to $600,000 as required by Sec. 11-71. It is recommended that you contact your insurance provider to determine if it will name the City of Columbia as an additional insured prior to submitting your request for an encroachment ordinance. If you have any questions concerning these requirements, please contact Chip Timmons with Risk Management, (803) 733-8306 or catimmons@columbiasc.net.

Please complete and submit this form along with photographs and drawings or site plan drawn to scale (including a 8-1/2 x11) to Johnathan Chambers by e-mail at jechambers@columbiasc.net; fax at 803-343-8779; or mail to Johnathan Chambers, Development Services, POB 147 Columbia, SC 29217, for preparation of an encroachment ordinance. Copies to City departments should be directed to the contact person for that department as shown below.

All work shall comply with the requirements of the City of Columbia and South Carolina Department of Transportation now in existence or hereafter enacted. The materials and type of finish to be used are to be approved by the City Engineer prior to installation. Any damage to the street or sidewalk caused by construction shall be repaired to the satisfaction of the City Manager. Improvements within the encroachment shall be maintained by the grantee at no cost to the City in a manner approved by the City Manager. Property owned, operated and maintained by SCDOT shall comply with SCDOT encroachment requirements.

Date: 3/7/2019 Property Owner: Second Nazareth Baptist Church

Applicant's Name if different from Property Owner: Central Midlands Transit Authority-The COMET

Contact Information: Telephone Number: 803-255-7136 Fax Number: _____

Mailing address: 3613 Lucius Road, Columbia, SC 29204 E-mail address: zmcghee@davisfloyd.com

Business Name/Development Name for Encroachment: Central Midlands Transit Authority- The COMET

Encroachment type: ___Wall ___ Fence ___ Columns ___ Steps ___ Irrigation System ___ Landscaping ____ Driveway ____ Pavers X Sidewalk/Walkway
Planters Awning Underground Utilities Other: Bus Shelter

Dimensions (height/width/length): 6"x7'x18' Concrete Pad
(i.e. 6'x42' wooden privacy fence; 9'x6'x16' Bus Shelter
two 12'x4'x3' concrete steps)

Construction material: Shelter-Aluminum Frame with Safety Glass Panels

☐ ***OUTDOOR DINING:*** *The Fire Marshal's posted capacity allowed within the business at the time of enactment of the outdoor dining encroachment ordinance shall include the total number of patron seating approved for the outdoor dining encroachment area, if not already included in the posted capacity allowance, so that patrons relocating from inside to the outside or from outside to the inside do not cause the posted capacity to be exceeded.*

Hours/days of operation for outdoor dining: N/A

Posted Maximum Capacity Allowance (inside/outside combined): N/A No. of chairs outdoors: N/A No. of Tables Outdoors: N/A

Do you serve: ☐ Wine ☐ Beer ☐ Liquor SCDOR ABL No.: N/A If not, do you intend to apply for an ABL license? N/A

I acknowledge that the adjoining property owners and businesses have been contacted and approve the addition of outdoor dining at this location to include the service of beer, wine and/or liquor if applicable during the business hours noted above, and that any changes made to the business hours, use of the encroachment area or items allowed within the encroachment area will require an amendment to the encroachment ordinance.

Name/Title:
Date:

I acknowledge that any changes made to the business, hours, use of the encroachment area, or items allowed within the encroachment area, to include obtaining a license to sell beer, wine and/or liquor will require an amendment to the encroachment ordinance.

Name/Title:
Date:

The proposed ordinance will be sent to the requesting party and City offices for review and approval. Johnathan Chambers will compile the recommendations and forward them to the City Clerk for scheduling before City Council. This process may take from 30-90 days.

CONTACT	DEPARTMENT	PHONE	FAX	E-MAIL
Johnathan Chambers	Development Services (Land Development)	803-545-3333	803-343-8779	jechambers@columbiasc.net
John Fellows	Development Services (Planning)	803-545-3222	803-733-8647	jsfellows@columbiasc.net
Brian Cook	Development Services (Zoning)	803-545-3332	803-733-8647	kbcook@columbiasc.net
Jerry Thompson	Development Services (Building Inspections)	803-545-3420	803-733-8699	jlthompson@columbiasc.net
Fanessa Pinckney	Development Services (Permits)	803-545-3420	803-733-8699	fcpinckney@columbiasc.net
Amy Moore	Development Services (Historic Preservation)	803-545-3222	803-733-8647	aemoore@columbiasc.net
Robert Harkins	Development Services (Plans Review)	803-545-3420	803-733-8647	rlharkins@columbiasc.net
Denny Daniels	Utilities & Engineering (Construction Management)	803-545-3400	803-988-8199	jddaniels@columbiasc.net
Robert Anderson	Public Works (Administration)	803-545-3780	803-733-8648	raanderson@columbiasc.net
Robert Sweat	Public Works (Street Division)	803-545-3790	803-545-3785	rgsweatt@columbiasc.net
David Brewer	Public Works (Traffic Engineering)	803-545-3850	803-733-8648	ddbrewer@columbiasc.net
Sara Hollar	Public Works (Forestry & Beautification)	803-545-3860	803-733-8648	sehollar@columbiasc.net
John Hooks	Public Works (Solid Waste)	803-545-3800	803-733-8648	jphooks@columbiasc.net
Chip Timmons	Risk Management	803-733-8306	803-733-8245	catimmons@columbiasc.net
David Koon	Fire Department	803-545-3701	803-401-8839	cfdgkoon@columbiasc.net
John David Spade	Parking Services	803-545-3070	803-733-8523	spade@columbiasc.net

LR: 7/2014

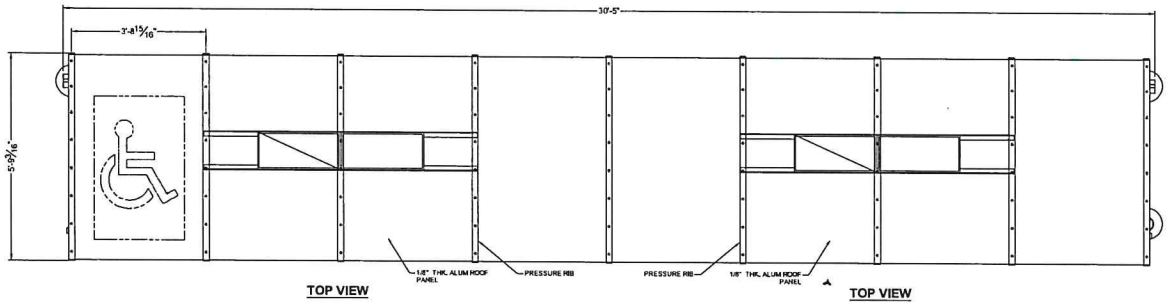

TOP VIEW

TOP VIEW

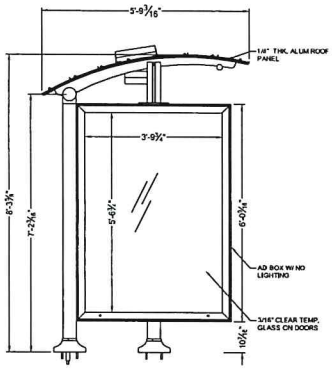

SIDE VIEW

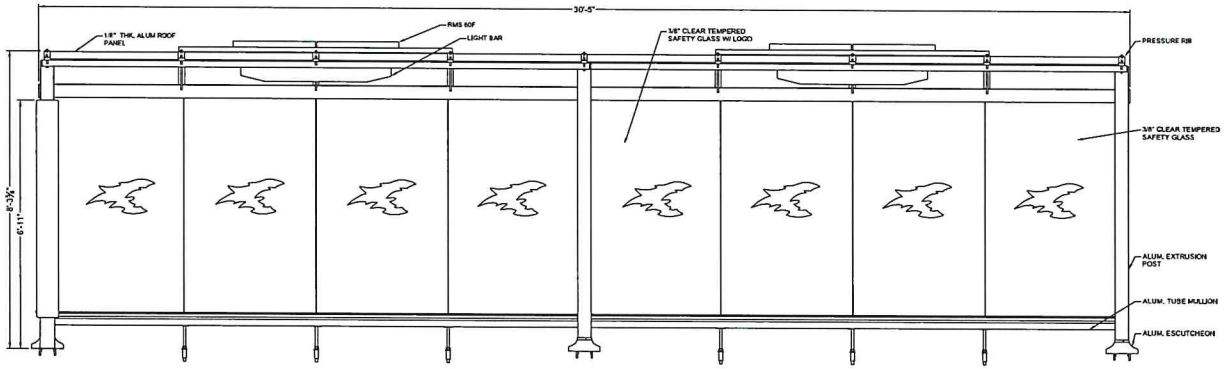

FRONT VIEW

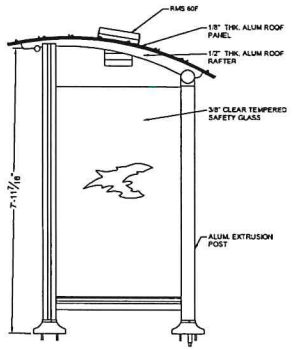

SIDE VIEW

GENERAL NOTES:

1. ALL STRUCTURAL STEEL, UNLESS OTHERWISE NOTED, SHALL BE ASTM A-36, MINIMUM YIELD STRENGTH 36,000 PSI.
2. ALL STRUCTURAL ALUMINUM MEMBERS, UNLESS OTHERWISE NOTED, SHALL BE OF ALLOY 6063-T5 OR GREATER.
3. ALL HOLES TO BE DRILLED OR PUNCHED.
4. STEEL WELDING SHALL CONFORM TO AMERICAN WELDING SOCIETY STANDARD D1. 1-10. ELECTRODES SHALL CONFORM TO AWS 5.1, CLASS E70S-5.
5. ALUMINUM WELDING SHALL CONFORM TO AMERICAN WELDING SOCIETY STANDARD D1. 2-08. ELECTRODES SHALL CONFORM TO AWS/SFA 5.10 CLASS ER4043.
6. ALL WELDING TO BE DONE AT TOLAR MANUFACTURING COMPANY, INC. FACILITY.

THE DESIGN AND DRAWINGS REMAIN THE INTELLECTUAL PROPERTY OF TOLAR MFG. AND ARE PROTECTED BY LAW. THEY MAY NOT BE ALTERED, REPRODUCED OR USED FOR FABRICATION WITHOUT EXPRESSED WRITTEN CONSENT FROM TOLAR MFG. ALL DOCUMENTS TO BE RETURNED TO TOLAR MFG., AT COMPLETION OF WORK. CONTRACTOR TO SITE VERIFY ALL DETAILS AND DIMENSIONS AND REPORT ANY AND ALL DISCREPANCIES TO TOLAR MFG. BEFORE COMMENCING WITH THAT RELATED PORTION OF THE WORK.

TOLAR MANUFACTURING COMPANY, INC
258 Mariah Circle, Corona CA, 92879

DESCRIPTION: 30' AD CUSTOM SUNSET SHELTER

CUSTOMER/VENDOR: COLUMBIA, SC

SIZE	MATL.	DWG NO.	REV
D		33272-00	-

SCALE	DATE	DRAWN BY
NOTED	10/9/2018	randrade

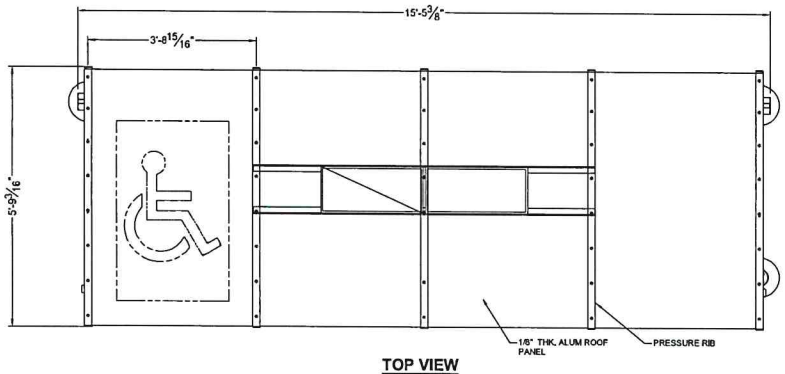

TOP VIEW

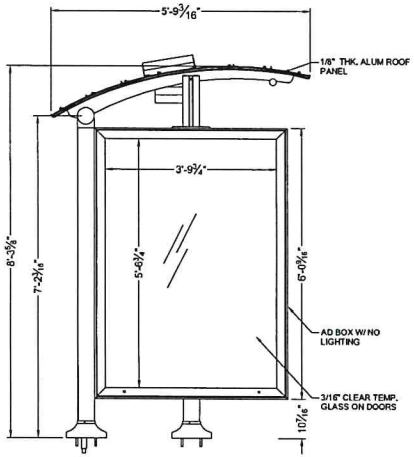

SIDE VIEW

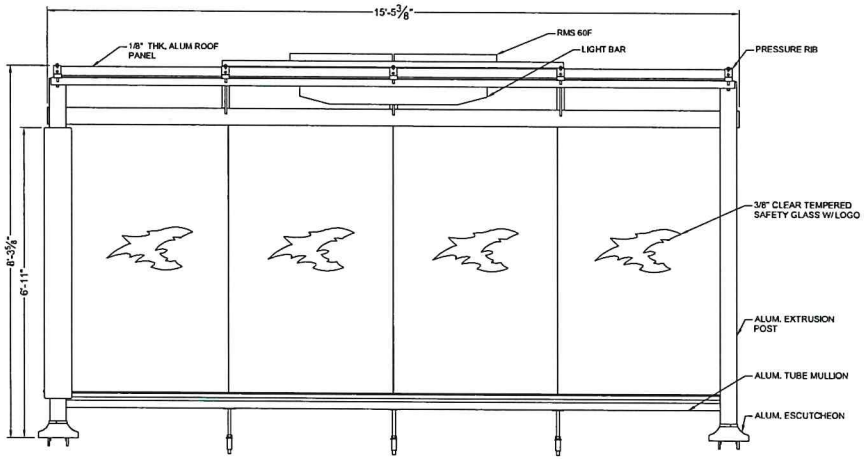

FRONT VIEW

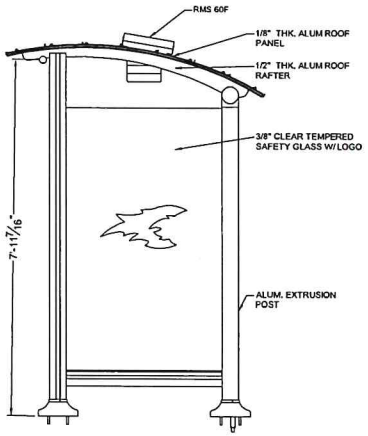

SIDE VIEW

GENERAL NOTES:

1. ALL STRUCTURAL STEEL, UNLESS OTHERWISE NOTED, SHALL BE ASTM A-36, MINIMUM YIELD STRENGTH 36,000 PSI.
2. ALL STRUCTURAL ALUMINUM MEMBERS, UNLESS OTHERWISE NOTED, SHALL BE OF ALLOY 6063-T5 OR GREATER.
3. ALL HOLES TO BE DRILLED OR PUNCHED.
4. STEEL WELDING SHALL CONFORM TO AMERICAN WELDING SOCIETY STANDARD D1. 1-10. ELECTRODES SHALL CONFORM TO AWS 5.1, CLASS E705-5.
5. ALUMINUM WELDING SHALL CONFORM TO AMERICAN WELDING SOCIETY STANDARD D1. 2-08. ELECTRODES SHALL CONFORM TO AWS/SFA 5.10 CLASS ER4043.
6. ALL WELDING TO BE DONE AT TOLAR MANUFACTURING COMPANY, INC. FACILITY.

THE DESIGN AND DRAWINGS REMAIN THE INTELLECTUAL PROPERTY OF TOLAR MFG. AND ARE PROTECTED BY LAW. THEY MAY NOT BE ALTERED, REPRODUCED OR USED FOR FABRICATION WITHOUT EXPRESSED WRITTEN CONSENT FROM TOLAR MFG. ALL DOCUMENTS TO BE RETURNED TO TOLAR MFG. AT COMPLETION OF WORK. CONTRACTOR TO SITE VERIFY ALL DETAILS AND DIMENSIONS AND REPORT ANY AND ALL DISCREPANCIES TO TOLAR MFG. BEFORE COMMENCING WITH THAT RELATED PORTION OF THE WORK.

TOLAR MANUFACTURING COMPANY, INC
258 Mariah Circle, Corona CA, 92879

DESCRIPTION: 16' AD CUSTOM SUNSET SHELTER
CUSTOMER/VENDOR: COLUMBIA, SC
SIZE: D | MATL. | DWG NO. 33271-00 | REV -
SCALE: NOTED | DATE: 10/9/2018 | DRAWN BY: randrade

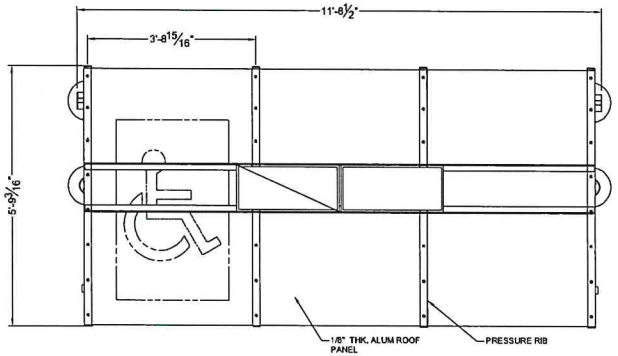

TOP VIEW

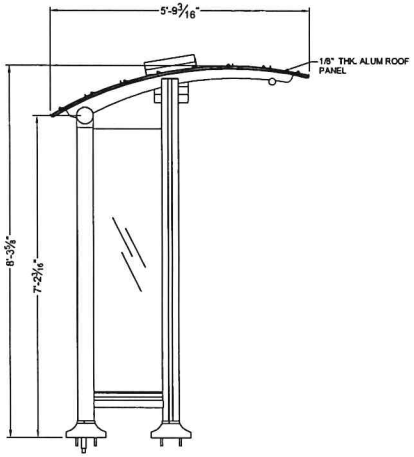

SIDE VIEW

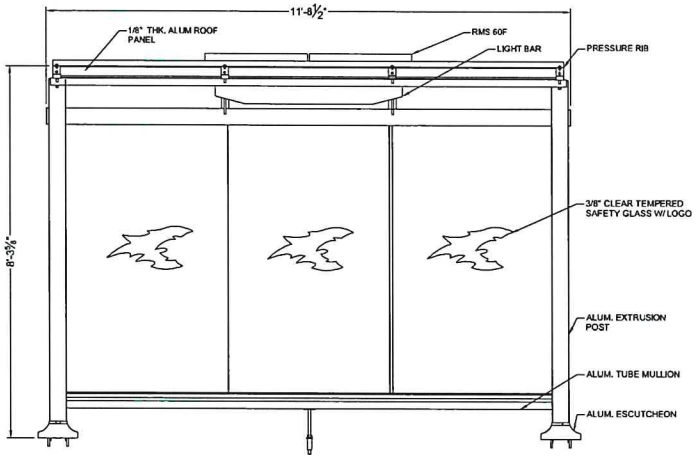

FRONT VIEW

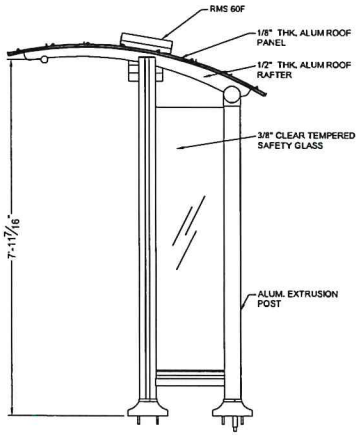

SIDE VIEW

GENERAL NOTES:

1. ALL STRUCTURAL STEEL, UNLESS OTHERWISE NOTED, SHALL BE ASTM A-36, MINIMUM YIELD STRENGTH 36,000 PSI.
2. ALL STRUCTURAL ALUMINUM MEMBERS, UNLESS OTHERWISE NOTED, SHALL BE OF ALLOY 6063-T5 OR GREATER.
3. ALL HOLES TO BE DRILLED OR PUNCHED.
4. STEEL WELDING SHALL CONFORM TO AMERICAN WELDING SOCIETY STANDARD D1. 1-10. ELECTRODES SHALL CONFORM TO AWS 5.1, CLASS E70S-5.
5. ALUMINUM WELDING SHALL CONFORM TO AMERICAN WELDING SOCIETY STANDARD D1. 2-08. ELECTRODES SHALL CONFORM TO AWS/SFA 5.10 CLASS ER4043.
6. ALL WELDING TO BE DONE AT TOLAR MANUFACTURING COMPANY, INC. FACILITY.

THE DESIGN AND DRAWINGS REMAIN THE INTELLECTUAL PROPERTY OF TOLAR MFG. AND ARE PROTECTED BY LAW. THEY MAY NOT BE ALTERED, REPRODUCED OR USED FOR FABRICATION WITHOUT EXPRESSED WRITTEN CONSENT FROM TOLAR MFG. ALL DOCUMENTS TO BE RETURNED TO TOLAR MFG. AT COMPLETION OF WORK. CONTRACTOR TO SITE VERIFY ALL DETAILS AND DIMENSIONS AND REPORT ANY AND ALL DISCREPANCIES TO TOLAR MFG. BEFORE COMMENCING WITH THAT RELATED PORTION OF THE WORK.

TOLAR MANUFACTURING COMPANY, INC
258 Mariah Circle, Corona CA, 92879

DESCRIPTION: 12' NON AD CUSTOM SUNSET SHELTER
CUSTOMER/VENDOR: COLUMBIA, SC
SIZE: D | MATL: | DWG NO. 33273-00 | REV -
SCALE: NOTED | DATE: 10/9/2018 | DRAWN BY: randrade

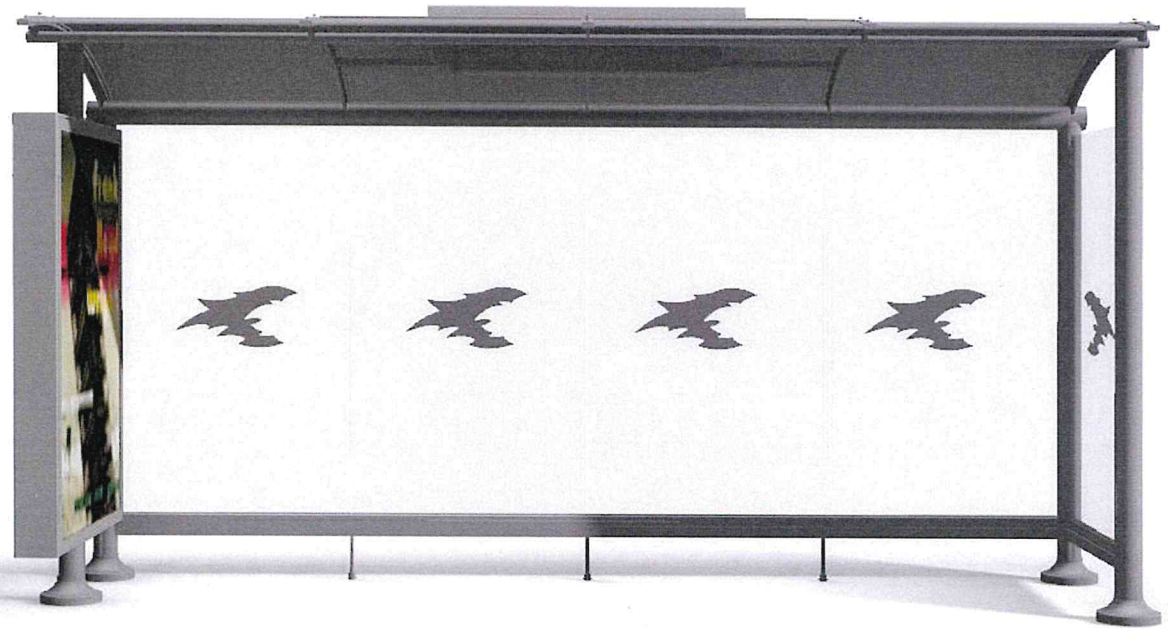

frank
lloyd
wright

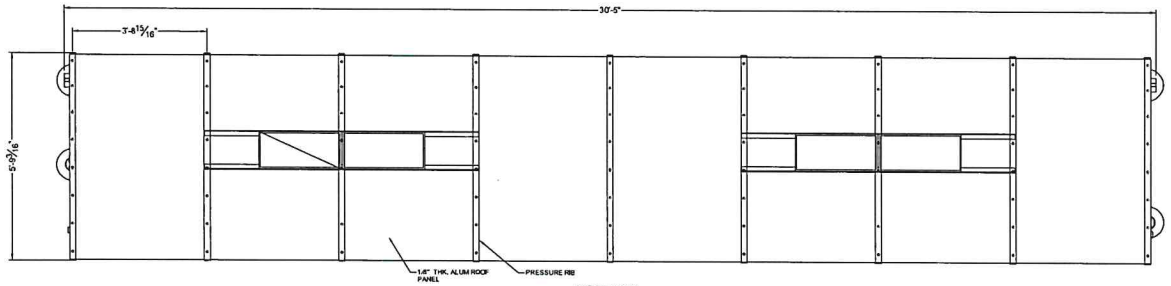

TOP VIEW

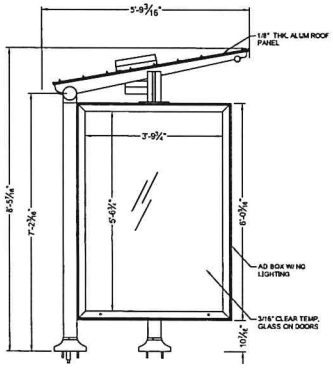

SIDE VIEW

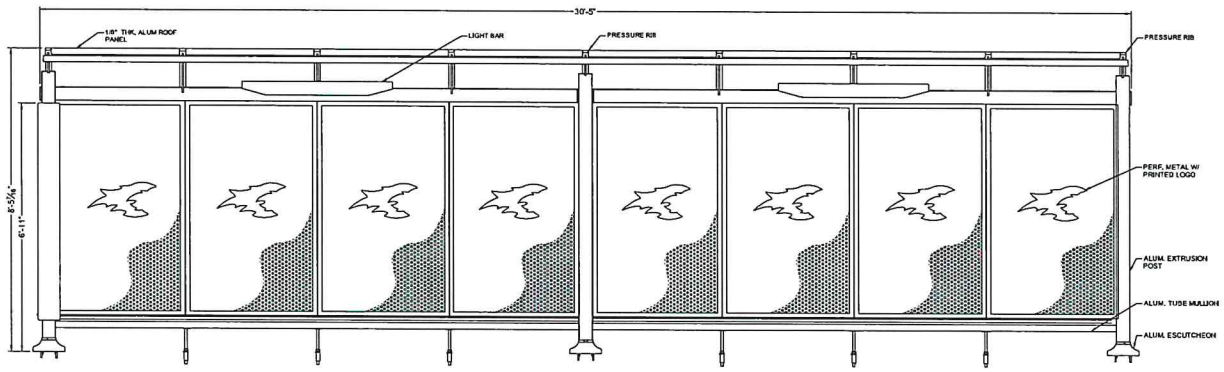

FRONT VIEW

FRONT VIEW

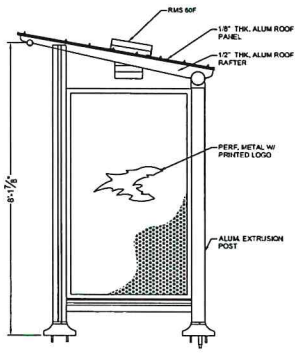

SIDE VIEW

GENERAL NOTES:

1. ALL STRUCTURAL STEEL, UNLESS OTHERWISE NOTED, SHALL BE ASTM A-36, MINIMUM YIELD STRENGTH 36,000 PSI.
2. ALL STRUCTURAL ALUMINUM MEMBERS, UNLESS OTHERWISE NOTED, SHALL BE OF ALLOY 6063-T5 OR GREATER.
3. ALL HOLES TO BE DRILLED OR PUNCHED.
4. STEEL WELDING SHALL CONFORM TO AMERICAN WELDING SOCIETY STANDARD D1. 1-10. ELECTRODES SHALL CONFORM TO AWS S.1. CLASS E70S-6.
5. ALUMINUM WELDING SHALL CONFORM TO AMERICAN WELDING SOCIETY STANDARD D1. 2-08. ELECTRODES SHALL CONFORM TO AWS/SFA 5.10 CLASS ER4043.
6. ALL WELDING TO BE DONE AT TOLAR MANUFACTURING COMPANY, INC. FACILITY.

THE DESIGN AND DRAWINGS REMAIN THE INTELLECTUAL PROPERTY OF TOLAR MFG. AND ARE PROTECTED BY LAW. THEY MAY NOT BE ALTERED, REPRODUCED OR USED FOR FABRICATION WITHOUT EXPRESSED WRITTEN CONSENT FROM TOLAR MFG. ALL DOCUMENTS TO BE RETURNED TO TOLAR MFG. AT COMPLETION OF WORK. CONTRACTOR TO SITE VERIFY ALL DETAILS AND DIMENSIONS AND REPORT ANY AND ALL DISCREPANCIES TO TOLAR MFG. BEFORE COMMENCING WITH THAT RELATED PORTION OF THE WORK.

TOLAR MANUFACTURING COMPANY, INC
258 Mariah Circle, Corona CA. 92879

DESCRIPTION: 30' AD CUSTOM EMPIRE SHELTER
CUSTOMER/PROJECT: COLUMBIA, SC
SIZE: D | MATL.: | DWG NO.: 33275-00 | REV: -
SCALE: NOTED | DATE: 10/11/2018 | DRAWN BY: raindrade

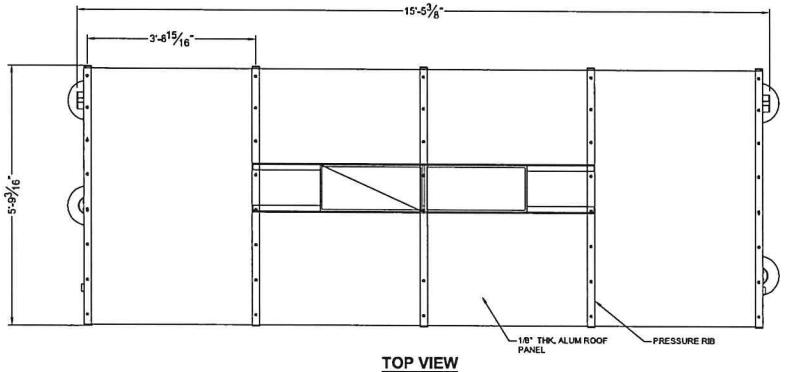

TOP VIEW

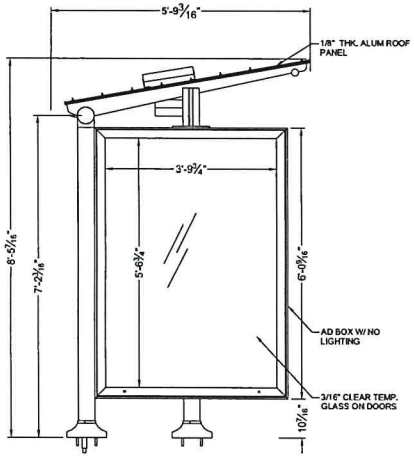

SIDE VIEW

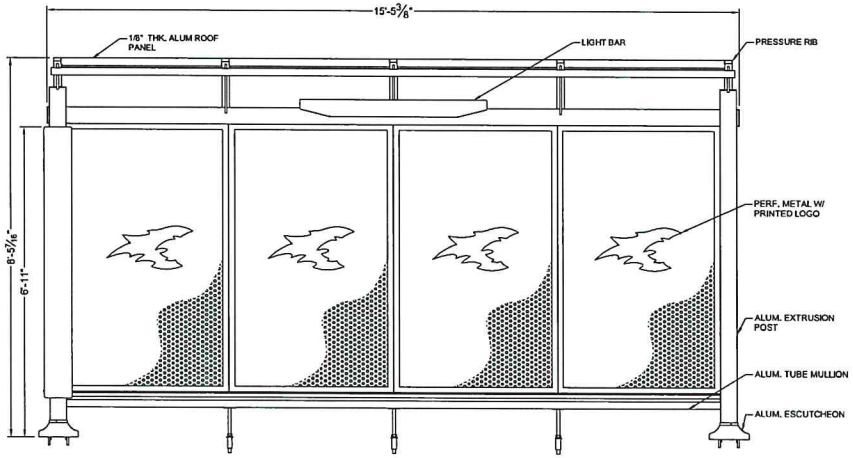

FRONT VIEW

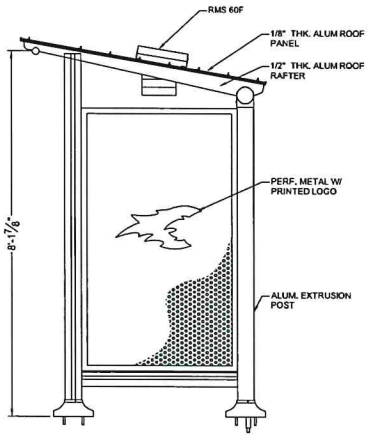

SIDE VIEW

GENERAL NOTES:

1. ALL STRUCTURAL STEEL, UNLESS OTHERWISE NOTED, SHALL BE ASTM A-36, MINIMUM YIELD STRENGTH 36,000 PSI.
2. ALL STRUCTURAL ALUMINUM MEMBERS, UNLESS OTHERWISE NOTED, SHALL BE OF ALLOY 6063-T5 OR GREATER.
3. ALL HOLES TO BE DRILLED OR PUNCHED.
4. STEEL WELDING SHALL CONFORM TO AMERICAN WELDING SOCIETY STANDARD D1. 1-10. ELECTRODES SHALL CONFORM TO AWS 5.1, CLASS E705-5.
5. ALUMINUM WELDING SHALL CONFORM TO AMERICAN WELDING SOCIETY STANDARD D1. 2-08. ELECTRODES SHALL CONFORM TO AWS/SFA 5.10 CLASS ER4043.
6. ALL WELDING TO BE DONE AT TOLAR MANUFACTURING COMPANY, INC. FACILITY.

THE DESIGN AND DRAWINGS REMAIN THE INTELLECTUAL PROPERTY OF TOLAR MFG. AND ARE PROTECTED BY LAW. THEY MAY NOT BE ALTERED. REPRODUCED OR USED FOR FABRICATION WITHOUT EXPRESSED WRITTEN CONSENT FROM TOLAR MFG. ALL DOCUMENTS TO BE RETURNED TO TOLAR MFG. AT COMPLETION OF WORK. CONTRACTOR TO SITE VERIFY ALL DETAILS AND DIMENSIONS AND REPORT ANY AND ALL DISCREPANCIES TO TOLAR MFG. BEFORE COMMENCING WITH THAT RELATED PORTION OF THE WORK.

TOLAR MANUFACTURING COMPANY, INC
258 Mariah Circle, Corona CA, 92879

DESCRIPTION	16' AD CUSTOM EMPIRE SHELTER
CUSTOMER/VENDOR	COLUMBIA, SC
SIZE	D
MATL.	
DWG NO.	33274-00
REV	-
SCALE	NOTED
DATE	10/11/2018
DRAWN BY	randrade

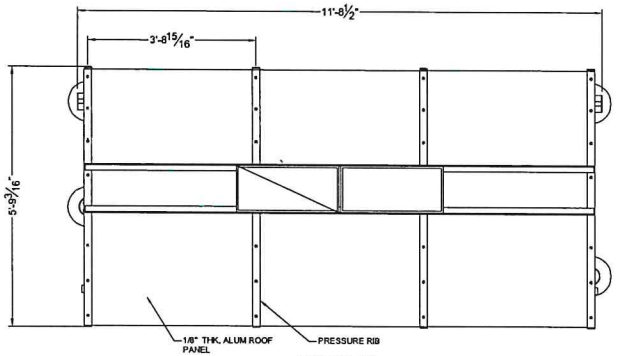

TOP VIEW

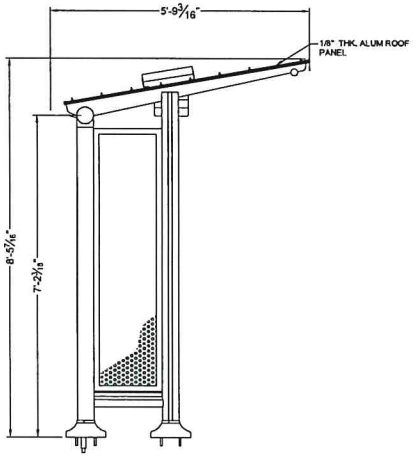

SIDE VIEW

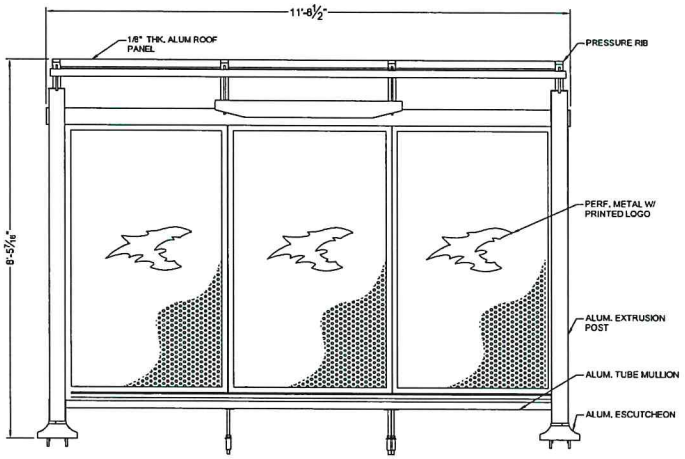

FRONT VIEW

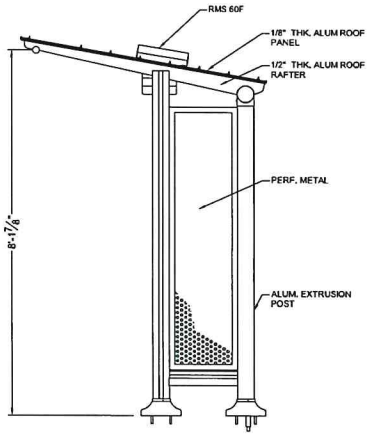

SIDE VIEW

GENERAL NOTES:

1. ALL STRUCTURAL STEEL, UNLESS OTHERWISE NOTED, SHALL BE ASTM A-36, MINIMUM YIELD STRENGTH 36,000 PSI.
2. ALL STRUCTURAL ALUMINUM MEMBERS, UNLESS OTHERWISE NOTED, SHALL BE OF ALLOY 6063-T5 OR GREATER.
3. ALL HOLES TO BE DRILLED OR PUNCHED.
4. STEEL WELDING SHALL CONFORM TO AMERICAN WELDING SOCIETY STANDARD D1. 1-10. ELECTRODES SHALL CONFORM TO AWS 5.1, CLASS E705-5.
5. ALUMINUM WELDING SHALL CONFORM TO AMERICAN WELDING SOCIETY STANDARD D1. 2-08. ELECTRODES SHALL CONFORM TO AWS/SFA 5.10 CLASS ER4043.
6. ALL WELDING TO BE DONE AT TOLAR MANUFACTURING COMPANY, INC. FACILITY.

THE DESIGN AND DRAWINGS REMAIN THE INTELLECTUAL PROPERTY OF TOLAR MFG. AND ARE PROTECTED BY LAW. THEY MAY NOT BE ALTERED, REPRODUCED OR USED FOR FABRICATION WITHOUT EXPRESSED WRITTEN CONSENT FROM TOLAR MFG. ALL DOCUMENTS TO BE RETURNED TO TOLAR MFG. AT COMPLETION OF WORK. CONTRACTOR TO SITE VERIFY ALL DETAILS AND DIMENSIONS AND REPORT ANY AND ALL DISCREPANCIES TO TOLAR MFG. BEFORE COMMENCING WITH THAT RELATED PORTION OF THE WORK.

TOLAR MANUFACTURING COMPANY, INC
258 Mariah Circle, Corona CA, 92879

DESCRIPTION: 12' NON AD CUSTOM EMPIRE SHELTER
CUSTOMER/VENDOR: COLUMBIA, SC
SIZE: D | MATL. | DWG NO. 33276-00 | REV -
SCALE: NOTED | DATE: 10/11/2018 | DRAWN BY: randrade

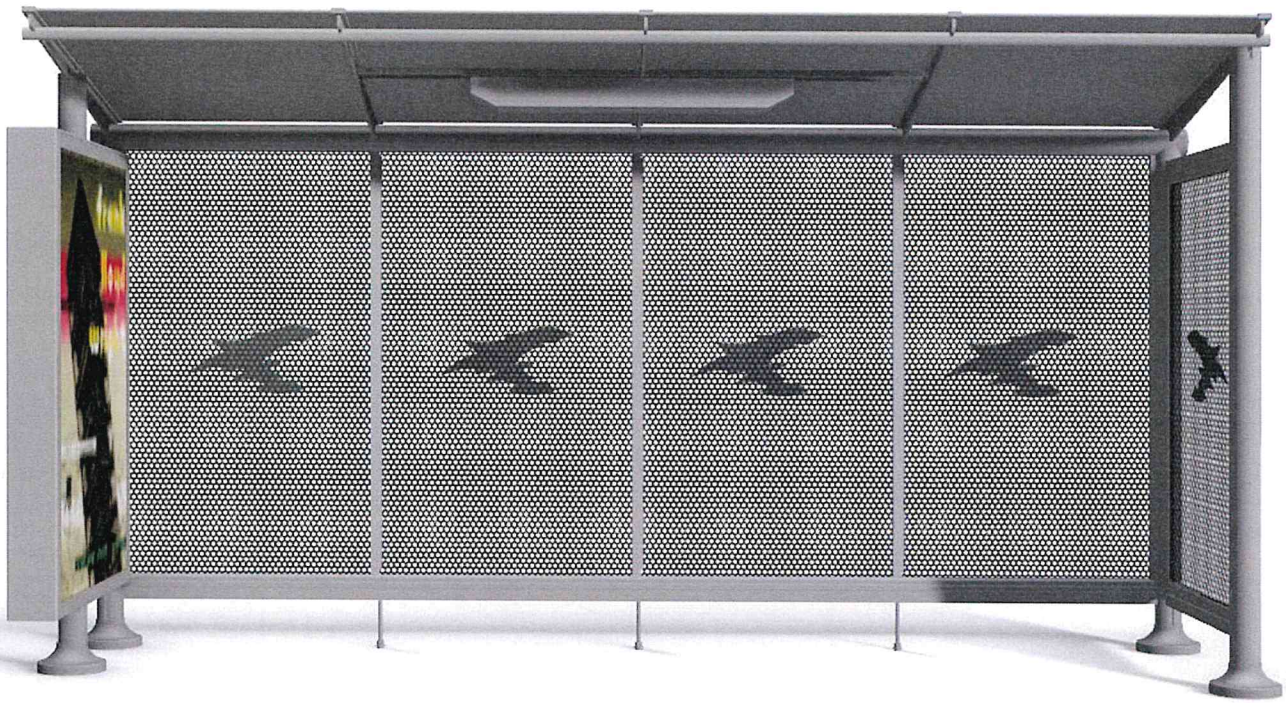

frank
lloyd
wright

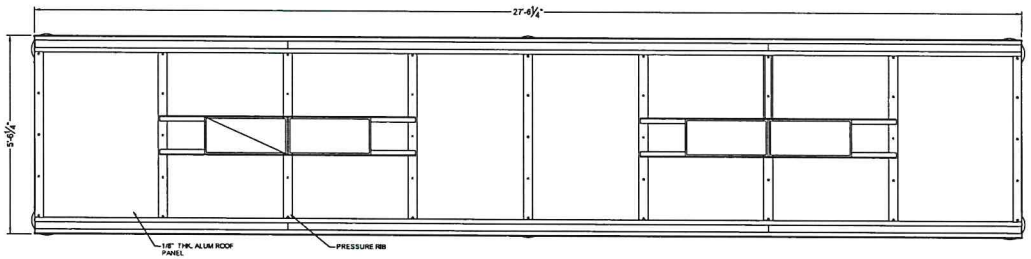

TOP VIEW

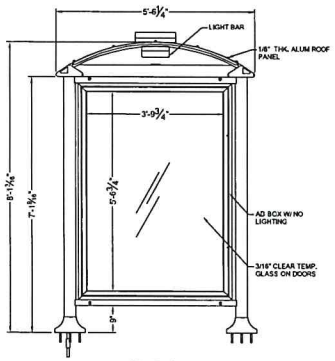

SIDE VIEW

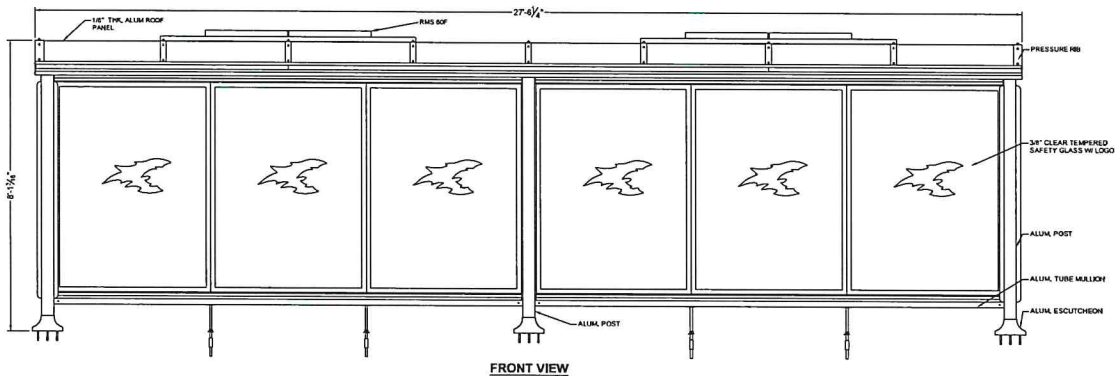

FRONT VIEW

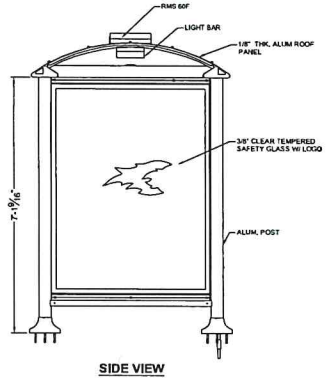

SIDE VIEW

GENERAL NOTES:

1. ALL STRUCTURAL STEEL, UNLESS OTHERWISE NOTED, SHALL BE ASTM A-36, MINIMUM YIELD STRENGTH 36,000 PSI.
2. ALL STRUCTURAL ALUMINUM MEMBERS, UNLESS OTHERWISE NOTED, SHALL BE OF ALLOY 6063-T5 OR GREATER.
3. ALL HOLES TO BE DRILLED OR PUNCHED.
4. STEEL WELDING SHALL CONFORM TO AMERICAN WELDING SOCIETY STANDARD D1. 1-10. ELECTRODES SHALL CONFORM TO AWS S.1, CLASS E70S-6.
5. ALUMINUM WELDING SHALL CONFORM TO AMERICAN WELDING SOCIETY STANDARD D1. 2-08. ELECTRODES SHALL CONFORM TO AWS/SFA 5.10 CLASS ER4043.
6. ALL WELDING TO BE DONE AT TOLAR MANUFACTURING COMPANY, INC. FACILITY.

THE DESIGN AND DRAWINGS REMAIN THE INTELLECTUAL PROPERTY OF TOLAR MFG. AND ARE PROTECTED BY LAW. THEY MAY NOT BE ALTERED, REPRODUCED OR USED FOR FABRICATION WITHOUT EXPRESSED WRITTEN CONSENT FROM TOLAR MFG. ALL DOCUMENTS TO BE RETURNED TO TOLAR MFG. AT COMPLETION OF WORK. CONTRACTOR TO SITE VERIFY ALL DETAILS AND DIMENSIONS AND REPORT ANY AND ALL DISCREPANCIES TO TOLAR MFG. BEFORE COMMENCING WITH THAT RELATED PORTION OF THE WORK.

TOLAR MANUFACTURING COMPANY, INC
258 Mariah Circle, Corona CA, 92879

DESCRIPTION: 28' AD CUSTOM EURO SHELTER
CUSTOMER/VENDOR: COLUMBIA, SC
SIZE: D | MATL. | DWG NO. 33276-00 | REV -
SCALE: NOTED | DATE: 10/11/2018 | DRAWN BY: randrade

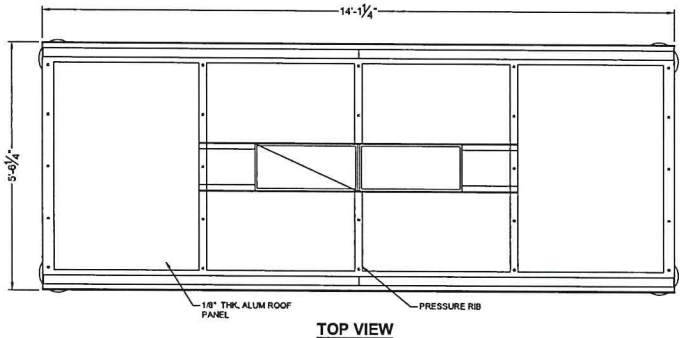

TOP VIEW

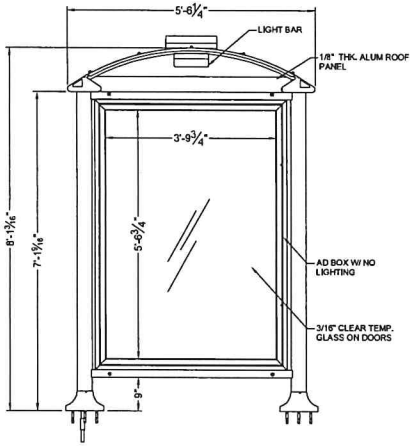

SIDE VIEW

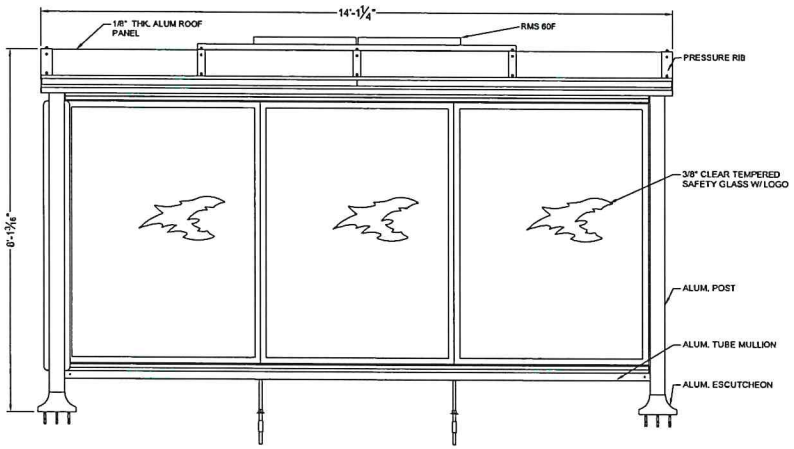

FRONT VIEW

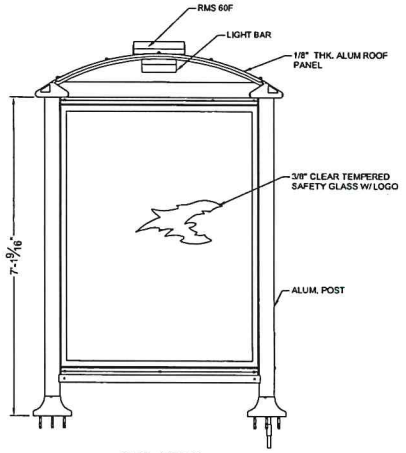

SIDE VIEW

GENERAL NOTES:

1. ALL STRUCTURAL STEEL, UNLESS OTHERWISE NOTED, SHALL BE ASTM A-36, MINIMUM YIELD STRENGTH 36,000 PSI.
2. ALL STRUCTURAL ALUMINUM MEMBERS, UNLESS OTHERWISE NOTED, SHALL BE OF ALLOY 6063-T5 OR GREATER.
3. ALL HOLES TO BE DRILLED OR PUNCHED.
4. STEEL WELDING SHALL CONFORM TO AMERICAN WELDING SOCIETY STANDARD D1. 1-10. ELECTRODES SHALL CONFORM TO AWS 5.1, CLASS E705-5.
5. ALUMINUM WELDING SHALL CONFORM TO AMERICAN WELDING SOCIETY STANDARD D1. 2-08. ELECTRODES SHALL CONFORM TO AWS/SFA 5.10 CLASS ER4043.
6. ALL WELDING TO BE DONE AT TOLAR MANUFACTURING COMPANY, INC. FACILITY.

THE DESIGN AND DRAWINGS REMAIN THE INTELLECTUAL PROPERTY OF TOLAR MFG. AND ARE PROTECTED BY LAW. THEY MAY NOT BE ALTERED, REPRODUCED OR USED FOR FABRICATION WITHOUT EXPRESSED WRITTEN CONSENT FROM TOLAR MFG. ALL DOCUMENTS TO BE RETURNED TO TOLAR MFG. AT COMPLETION OF WORK. CONTRACTOR TO SITE VERIFY ALL DETAILS AND DIMENSIONS AND REPORT ANY AND ALL DISCREPANCIES TO TOLAR MFG. BEFORE COMMENCING WITH THAT RELATED PORTION OF THE WORK.

TOLAR MANUFACTURING COMPANY, INC
258 Marlah Circle, Corona CA, 92879

DESCRIPTION: 16' AD CUSTOM EURO SHELTER
CUSTOMER/VENDOR: COLUMBIA, SC
SIZE: D | MATL. | DWG NO. 33277-00 | REV -
SCALE: NOTED | DATE: 10/11/2018 | DRAWN BY: randrade

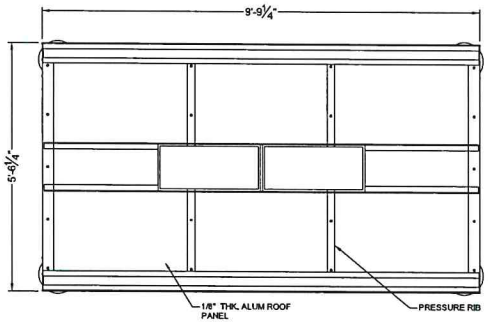

TOP VIEW

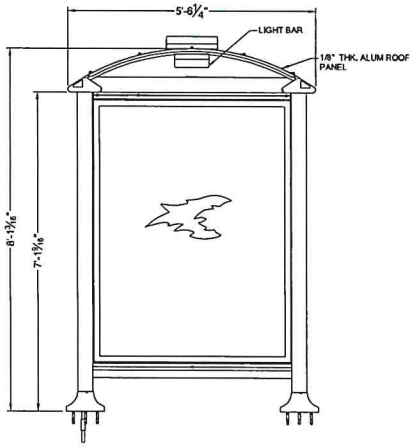

SIDE VIEW

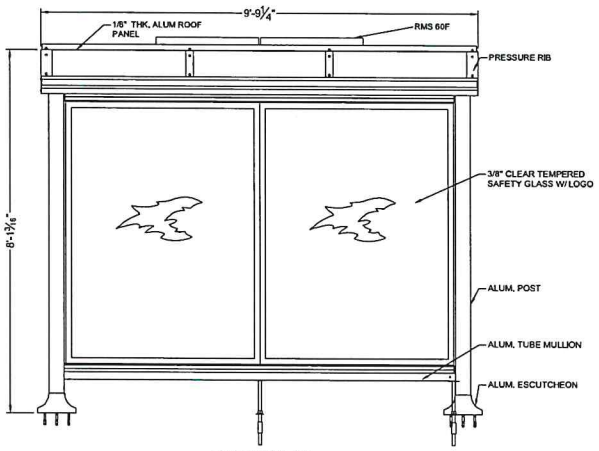

FRONT VIEW

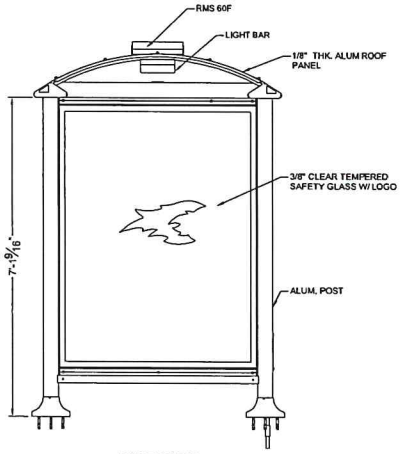

SIDE VIEW

GENERAL NOTES:

1. ALL STRUCTURAL STEEL, UNLESS OTHERWISE NOTED, SHALL BE ASTM A-36, MINIMUM YIELD STRENGTH 36,000 PSI.
2. ALL STRUCTURAL ALUMINUM MEMBERS, UNLESS OTHERWISE NOTED, SHALL BE OF ALLOY 6063-T5 OR GREATER.
3. ALL HOLES TO BE DRILLED OR PUNCHED.
4. STEEL WELDING SHALL CONFORM TO AMERICAN WELDING SOCIETY STANDARD D1. 1-10. ELECTRODES SHALL CONFORM TO AWS 5.1, CLASS E70S-5.
5. ALUMINUM WELDING SHALL CONFORM TO AMERICAN WELDING SOCIETY STANDARD D1. 2-08. ELECTRODES SHALL CONFORM TO AWS/SFA 5.10 CLASS ER4043.
6. ALL WELDING TO BE DONE AT TOLAR MANUFACTURING COMPANY, INC. FACILITY.

THE DESIGN AND DRAWINGS REMAIN THE INTELLECTUAL PROPERTY OF TOLAR MFG. AND ARE PROTECTED BY LAW. THEY MAY NOT BE ALTERED, REPRODUCED OR USED FOR FABRICATION WITHOUT EXPRESSED WRITTEN CONSENT FROM TOLAR MFG. ALL DOCUMENTS TO BE RETURNED TO TOLAR MFG. AT COMPLETION OF WORK. CONTRACTOR TO SITE VERIFY ALL DETAILS AND DIMENSIONS AND REPORT ANY AND ALL DISCREPANCIES TO TOLAR MFG. BEFORE COMMENCING WITH THAT RELATED PORTION OF THE WORK.

TOLAR MANUFACTURING COMPANY, INC
258 Marlah Circle, Corona CA. 92879

DESCRIPTION: 10' NON AD CUSTOM EURO SHELTER

CUSTOMER/VENDOR: COLUMBIA, SC

SIZE	MATL.	DWG NO.	REV
D		33279-00	-

SCALE	DATE	DRAWN BY
NOTED	10/11/2018	randrade

frank
lloyd
wright

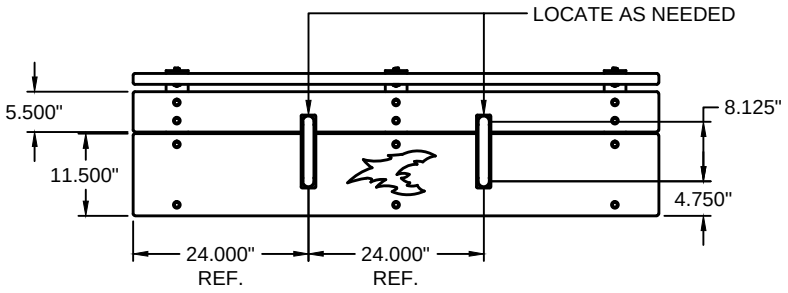

PLAN VIEW

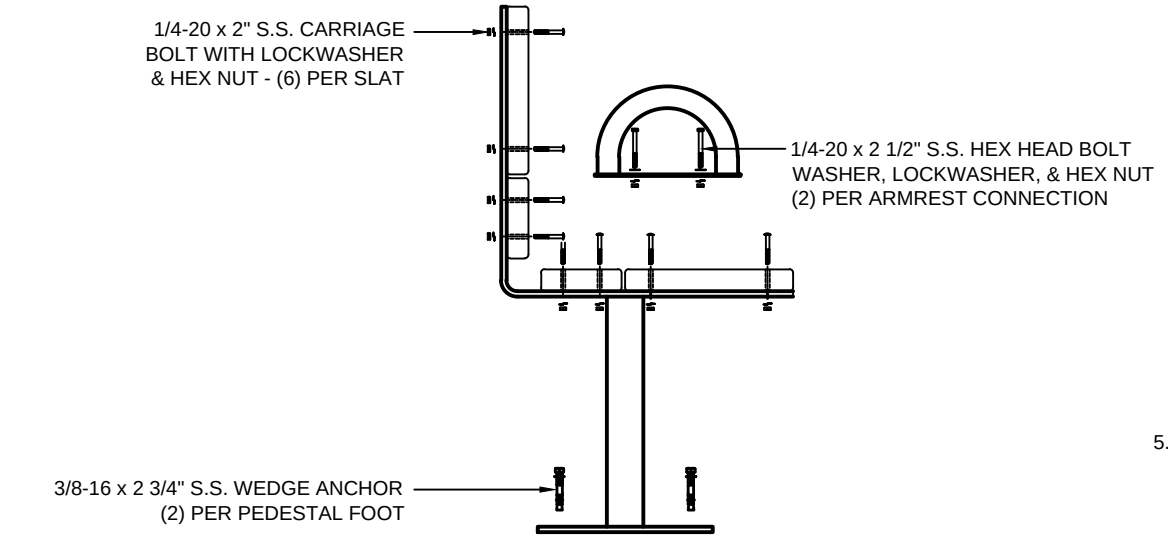

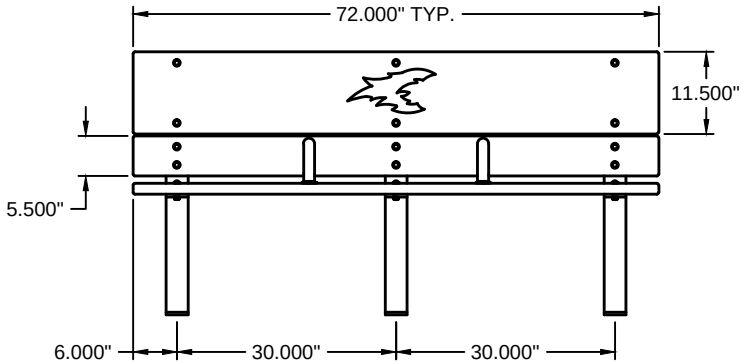

FRONT ELEVATION

-- BENCH LAYOUT.

BRASCO INTERNATIONAL, INC.
32400 INDUSTRIAL DRIVE
MADISON HEIGHTS, MICHIGAN 48071
1-800-893-3665 WWW.BRASCO.COM

THIS DRAWING IS PROPRIETARY AND IS FOR THE SOLE USE OF OUR CUSTOMERS AND MAY NOT BE REPRODUCED OR COPIED WITHOUT WRITTEN PERMISSION FROM BRASCO INTERNATIONAL.

LEAD TIME BEGINS UPON RECEIPT OF SIGNED APPROVAL.

SIGNED:_____ DATE:_____

CUSTOMER:	CENTRAL MIDLANDS TRANSIT			ENGINEER:	HAUS
PROJECT:	INSTALLATION INSTRUCTIONS			DATE:	7-21-14
				CHECKER:	BDH
MODEL:	LEAN RAIL INSTALL	JOB #	3763	SHEET #:	INSTALL-9

EX-CELL Kaiser LLC USA
Service Quality Strength Innovation
11240 Melrose Ave.
Franklin Park, IL 60131
P: 847-451-0451
F: 847-451-0458

BR-1022 Bracket Kit for WR-10/22

For Pole or Wall Mount Applications

Bracket Kit Includes:

Qty. Description
(1) - Large pole / wall bracket
(2) - "2" brackets
(4) - 1/4-20" x 1/2" hex head bolts
(4) - 1/4-20" hex "kep" nuts
(2) - Stainless steel straps

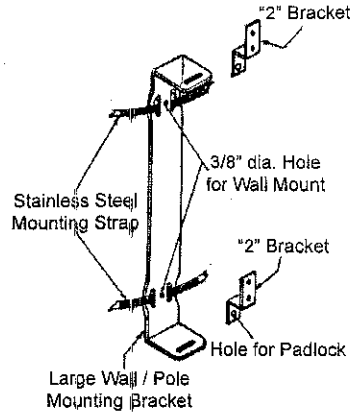

Mounting

1. Decide proper height for basket, and mount large bracket to pole or wall. Bottom of bracket should be positioned 3/4" higher than final height to bottom of basket.

For Pole Mount

1. Insert straps as shown through the top and bottom of large bracket, and tighten onto pole. Cut off any unused portion of the strap. (Approx. 2" beyond the clip).

For Wall Mount

1. Screw or bolt the large bracket using the recommended hardware for your particular substrate, through the two large hole (3/8" dia.) located between the strap mounting slots on the large bracket.

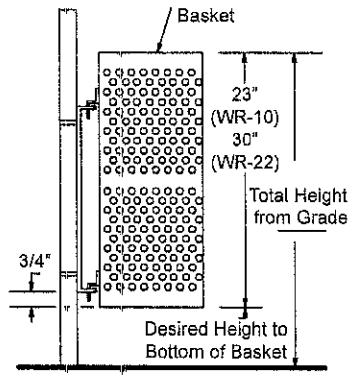

To Mount "2" Brackets

1. Drill (4) 4/16" dia. holes in the basket adjacent to the seam in the back of the basket.
   (See sketch for dimensional layout).
2. Mount both "2" brackets on the baskets with the pad lock hole flange pointing down, using (2) 1/4-10 x 1/2" hex head bolts and hex "kep" nuts per bracket.

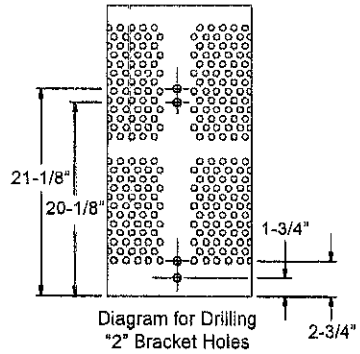

From: Johnny Ray Noble <revnoble@aol.com>
Sent: Monday, March 4, 2019 10:28 AM
To: Todd Warren <twarren@davisfloyd.com>
Cc: luke@aossc.org; luis.ortiz@catchthecomet.org
Subject: RE: COMET Bus Stop - Barhamville Elmwood SB

Todd,
Please proceed with the shelter on our easement. We are in agreement and give our approval. Paperwork to follow when I return. Thank you for all of your help.

Johnny Ray Noble, PhD

On Monday, March 4, 2019 Todd Warren <twarren@davisfloyd.com> wrote:

Pastor Noble,

Per our conversation this morning, We understand that the Church is in favor of the COMET placing a new shelter across from the Church. We understand that you guys have signed the easement agreement but that you are currently out of town. Please respond with your approval to this email and we will get the construction scheduled while we wait for the receipt of the easement document. Thank you for your help with this project.

Thanks,

Todd Warren, PE
ASSOCIATE | PROJECT MANAGER
---
240 Stoneridge Drive, Suite 305, Columbia, SC 29210
O. (803) 256-4121 | F. (803) 254-4549
E. twarren@davisfloyd.com | www.davisfloyd.com

~CONFIDENTIALITY NOTICE~

The information and all attachments contained in this email message are for the use of the intended recipients only. If you are not an intended recipient, please be advised that any use, dissemination, distribution, or copying of this email is strictly prohibited. If you have received this communication in error, please notify us immediately by telephone or return email, and delete this email message and all attachments from your system.

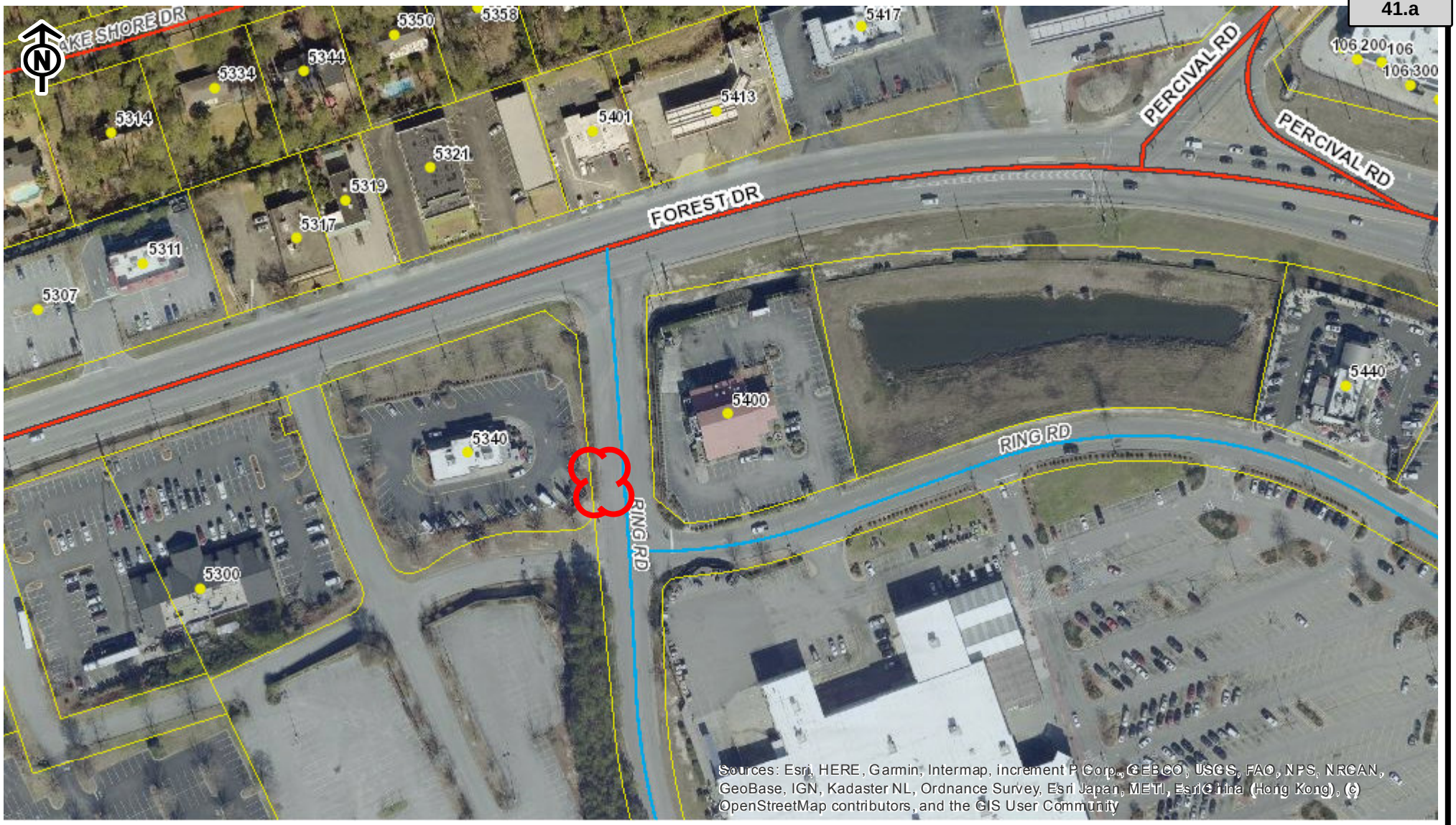

Comet Bus Shelter

City of Columbia

We Are Columbia

This map was prepared using the City GIS Viewer:

City of Columbia - GIS Division
Friday, September 27, 2019

- Address Point
- Tax Parcel

Street Ownership

- City of Columbia
- State
- County
- Federal
- Private
- University of South Carolina
- Working
- Interstates

Highways

- US
- SC
- Arterial Streets
- Columbia City Limits
- Red: Red
- Green: Green
- Blue: Blue

0 0.02 0.04 0.08 mi

CITY OF COLUMBIA
GIS DATA DISCLAIMER:
The City of Columbia GIS data represented on this map or plan is the product of the compilation of data produced by others. It is provided for informational purposes only and the City of Columbia makes no representation as to its accuracy. Its use without field verification is at the sole risk

BUS STOP #1043
GREGG STREET AND
LITTLE ROAD

* TIE PROPOSED CONCRETE PAD FLUSH WITH THE EXISTING SIDEWALK. PAD MUST HAVE A TRANSVERSE SLOPE NO LESS THAN 50:1 AND NO GREATER THAN 12:1. THE LONGITUDINAL SLOPE OF THE NEW PAD SHALL MATCH THE LONGITUDINAL SLOPE OF THE EXISTING SIDEWALK.
* CONCRETE PAD SHALL BE 6" THICK.

* SEE SHOP DRAWINGS FOR ALL DETAILS AND DIMENSIONS OF BENCH, CONCRETE PAD, AND TRASH CAN.
* BENCH AND TRASH CAN TO BE MAINTAINED BY THE COMET.
* MOUNT NEW TRASH CAN TO NEW BUS STOP SIGN.

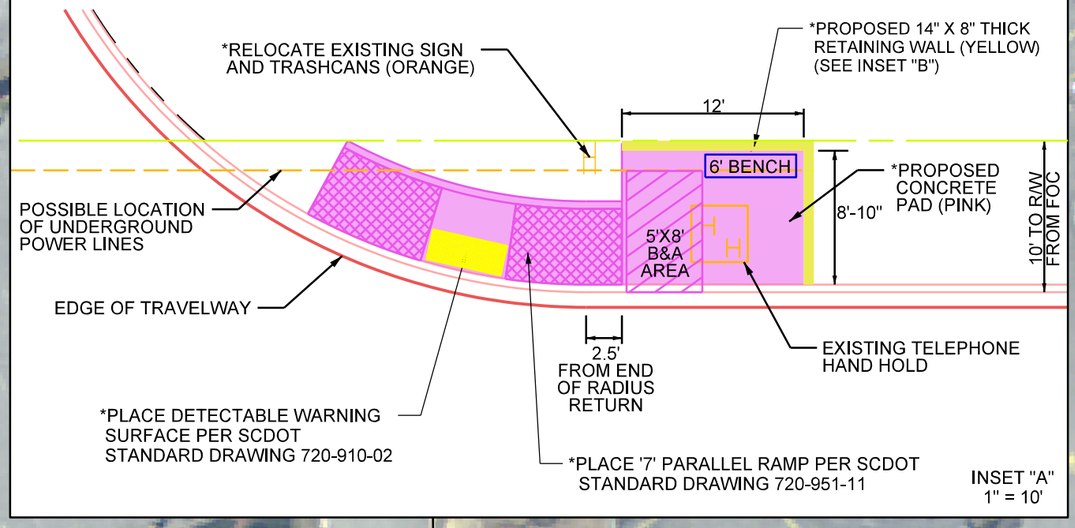

INSET "A"
1" = 10'

RETAINING WALL DETAIL

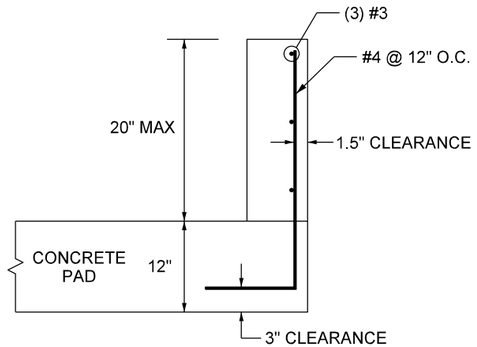

INSET "B"

PROPOSED 6' BENCH (SEE INSET A)

EXISTING 40' R/W

14.5 FT FROM EDGE OF TRAVELWAY

EXISTING 40' R/W

℄ GREGG STREET

℄ LITTLE ROAD

DATE:5/10/2019
PENTABLE:COMET-PDF.tbl
FILE:\\cdt-fs1\data\Jobs\Even\13468-000\Production\f_dgn\Phase 87- Gregg at Little\Gregg at Little.dgn
SCALE:40.000 ft / in.

REQUEST FOR A PERMANENT COMMERCIAL ENCROACHMENT ORDINANCE (INCLUDING OUTDOOR DINING/LANDSCAPING/STUDENT HOUSING)

For a continuing encroachment on any type of property in which the City has an interest (i.e., rights of way, tree zone, sidewalk, streets), the person or entity is required to have an encroachment ordinance enacted by City Council permitting the encroachment. Encroachment ordinances are required for but not limited to: irrigation systems; landscaping; fencing; walls; pavers; walkways; outdoor dining items (chairs, tables, umbrellas, etc.); awnings; bollards and directional signs (i.e., churches) Business signs are NOT permitted via an encroachment. Encroachments must comply with all existing City codes, rules and regulations, the Americans with Disabilities Act, if applicable, and are subject to review and approval by City staff. Enactment of the encroachment ordinance by a majority vote of City Council, which is a discretionary legislative act, is also required. In order to obtain an encroachment ordinance from the City of Columbia, it will be necessary for the City of Columbia to be named as an additional insured on your insurance policy with limits being increased to $600,000 as required by Sec. 11-71. It is recommended that you contact your insurance provider to determine if it will name the City of Columbia as an additional insured prior to submitting your request for an encroachment ordinance. If you have any questions concerning these requirements, please contact Chip Timmons with Risk Management, (803) 733-8306 or catimmons@columbiasc.net.

Please complete and submit this form along with photographs and drawings or site plan drawn to scale (including a 8-1/2 x11) to Johnathan Chambers by e-mail at jechambers@columbiasc.net; fax at 803-343-8779; or mail to Johnathan Chambers, Development Services, POB 147 Columbia, SC 29217, for preparation of an encroachment ordinance. Copies to City departments should be directed to the contact person for that department as shown below.

All work shall comply with the requirements of the City of Columbia and South Carolina Department of Transportation now in existence or hereafter enacted. The materials and type of finish to be used are to be approved by the City Engineer prior to installation. Any damage to the street or sidewalk caused by construction shall be repaired to the satisfaction of the City Manager. Improvements within the encroachment shall be maintained by the grantee at no cost to the City in a manner approved by the City Manager. Property owned, operated and maintained by SCDOT shall comply with SCDOT encroachment requirements.

Date: 10/15/2019 Property Owner: City of Columbia

Applicant's Name if different from Property Owner: Central Midlands Transit Authority-The COMET

Contact Information: Telephone Number: 803-255-7087 Fax Number: _____

Mailing address: 3613 Lucius Road, Columbia, SC 29204 E-mail address: zmcghee@davisfloyd.com

Business Name/Development Name for Encroachment: Central Midlands Transit Authority-The COMET

Encroachment type: ___Wall ___ Fence ___ Columns ___ Steps ___ Irrigation System ___ Landscaping ____ Driveway ____ Pavers __X__ Sidewalk/Walkway Planters Awning Underground Utilities Other: Bus Shelter

Dimensions (height/width/length): 6"x12'x8'-10" Concrete Pad
(i.e. 6'x42' wooden privacy fence; two 12'x4'x3' concrete steps) 14"x8"x12' Concrete Retaining Wall
6'Bench

Construction material: Bench-Aluminum Frame with Composite boards

☐ ***OUTDOOR DINING:*** *The Fire Marshal's posted capacity allowed within the business at the time of enactment of the outdoor dining encroachment ordinance shall include the total number of patron seating approved for the outdoor dining encroachment area, if not already included in the posted capacity allowance, so that patrons relocating from inside to the outside or from outside to the inside do not cause the posted capacity to be exceeded.*

Hours/days of operation for outdoor dining: N/A

Posted Maximum Capacity Allowance (inside/outside combined): N/A No. of chairs outdoors: N/A No. of Tables Outdoors: N/A

Do you serve: ☐ Wine ☐ Beer ☐ Liquor SCDOR ABL No.: N/A If not, do you intend to apply for an ABL license? N/A

I acknowledge that the adjoining property owners and businesses have been contacted and approve the addition of outdoor dining at this location to include the service of beer, wine and/or liquor if applicable during the business hours noted above, and that any changes made to the business hours, use of the encroachment area or items allowed within the encroachment area will require an amendment to the encroachment ordinance.

Name/Title:
Date:

I acknowledge that any changes made to the business, hours, use of the encroachment area, or items allowed within the encroachment area, to include obtaining a license to sell beer, wine and/or liquor will require an amendment to the encroachment ordinance.

Name/Title:
Date:

The proposed ordinance will be sent to the requesting party and City offices for review and approval. Johnathan Chambers will compile the recommendations and forward them to the City Clerk for scheduling before City Council. This process may take from 30-90 days.

CONTACT	DEPARTMENT	PHONE	FAX	E-MAIL
Johnathan Chambers	Development Services (Land Development)	803-545-3333	803-343-8779	jechambers@columbiasc.net
John Fellows	Development Services (Planning)	803-545-3222	803-733-8647	jsfellows@columbiasc.net
Brian Cook	Development Services (Zoning)	803-545-3332	803-733-8647	kbcook@columbiasc.net
Jerry Thompson	Development Services (Building Inspections)	803-545-3420	803-733-8699	jithompson@columbiasc.net
Fanessa Pinckney	Development Services (Permits)	803-545-3420	803-733-8699	fcpinckney@columbiasc.net
Amy Moore	Development Services (Historic Preservation)	803-545-3222	803-733-8647	aemoore@columbiasc.net
Robert Harkins	Development Services (Plans Review)	803-545-3420	803-733-8647	rlharkins@columbiasc.net
Denny Daniels	Utilities & Engineering (Construction Management)	803-545-3400	803-988-8199	jddaniels@columbiasc.net
Robert Anderson	Public Works (Administration)	803-545-3780	803-733-8648	raanderson@columbiasc.net
Robert Sweat	Public Works (Street Division)	803-545-3790	803-545-3785	rgsweatt@columbiasc.net
David Brewer	Public Works (Traffic Engineering)	803-545-3850	803-733-8648	ddbrewer@columbiasc.net
Sara Hollar	Public Works (Forestry & Beautification)	803-545-3860	803-733-8648	sehollar@columbiasc.net
John Hooks	Public Works (Solid Waste)	803-545-3800	803-733-8648	jphooks@columbiasc.net
Chip Timmons	Risk Management	803-733-8306	803-733-8245	catimmons@columbiasc.net
David Koon	Fire Department	803-545-3701	803-401-8839	cfdgkoon@columbiasc.net
John David Spade	Parking Services	803-545-3070	803-733-8523	spade@columbiasc.net

LR: 7/2014

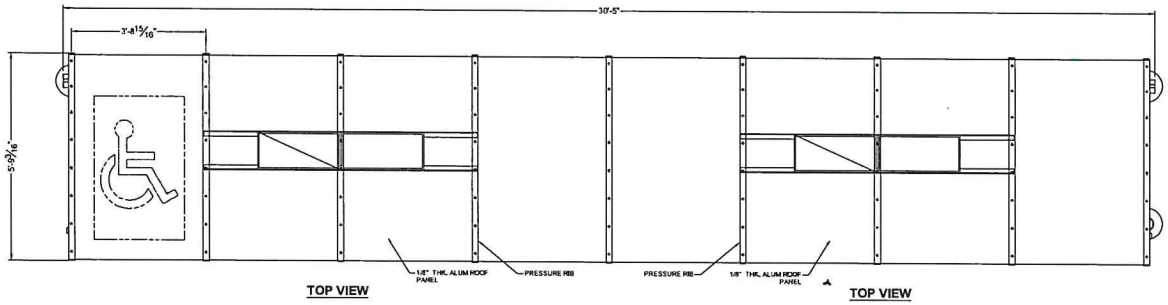

TOP VIEW

TOP VIEW

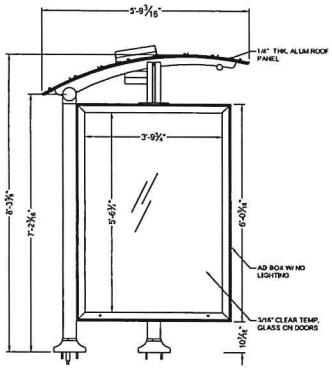

SIDE VIEW

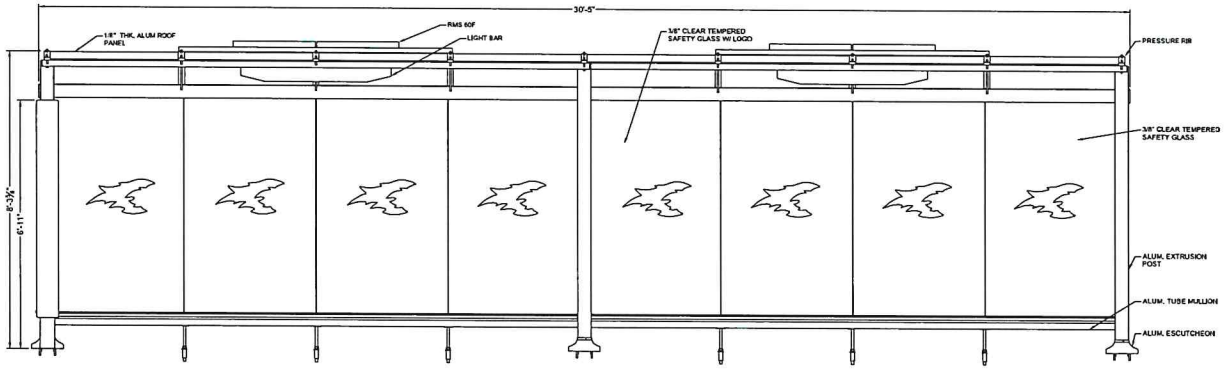

FRONT VIEW

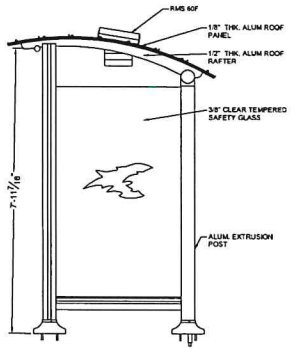

SIDE VIEW

GENERAL NOTES:

1. ALL STRUCTURAL STEEL, UNLESS OTHERWISE NOTED, SHALL BE ASTM A-36, MINIMUM YIELD STRENGTH 36,000 PSI.
2. ALL STRUCTURAL ALUMINUM MEMBERS, UNLESS OTHERWISE NOTED, SHALL BE OF ALLOY 6063-T5 OR GREATER.
3. ALL HOLES TO BE DRILLED OR PUNCHED.
4. STEEL WELDING SHALL CONFORM TO AMERICAN WELDING SOCIETY STANDARD D1. 1-10. ELECTRODES SHALL CONFORM TO AWS 5.1, CLASS E70S-5.
5. ALUMINUM WELDING SHALL CONFORM TO AMERICAN WELDING SOCIETY STANDARD D1. 2-08. ELECTRODES SHALL CONFORM TO AWS/SFA 5.10 CLASS ER4043.
6. ALL WELDING TO BE DONE AT TOLAR MANUFACTURING COMPANY, INC. FACILITY.

THE DESIGN AND DRAWINGS REMAIN THE INTELLECTUAL PROPERTY OF TOLAR MFG. AND ARE PROTECTED BY LAW. THEY MAY NOT BE ALTERED, REPRODUCED OR USED FOR FABRICATION WITHOUT EXPRESSED WRITTEN CONSENT FROM TOLAR MFG. ALL DOCUMENTS TO BE RETURNED TO TOLAR MFG., AT COMPLETION OF WORK. CONTRACTOR TO SITE VERIFY ALL DETAILS AND DIMENSIONS AND REPORT ANY AND ALL DISCREPANCIES TO TOLAR MFG. BEFORE COMMENCING WITH THAT RELATED PORTION OF THE WORK.

TOLAR MANUFACTURING COMPANY, INC
258 Mariah Circle, Corona CA, 92879

DESCRIPTION: 30' AD CUSTOM SUNSET SHELTER
CUSTOMER/VENDOR: COLUMBIA, SC
SIZE: D | MATL.: | DWG NO.: 33272-00 | REV: -
SCALE: NOTED | DATE: 10/9/2018 | DRAWN BY: randrade

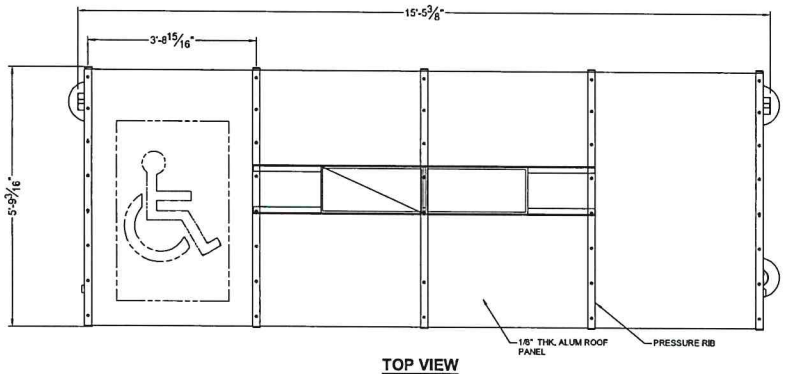

TOP VIEW

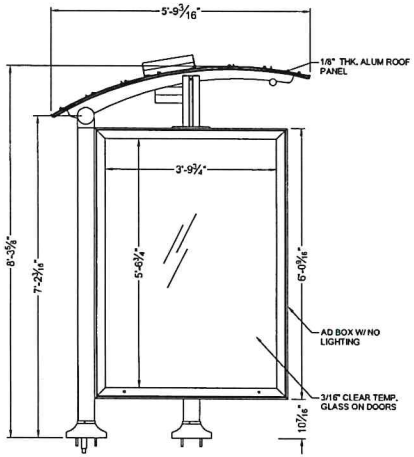

SIDE VIEW

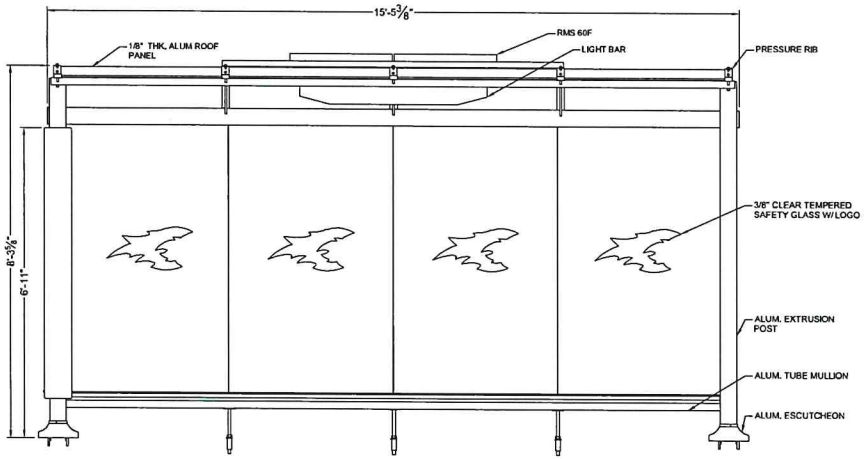

FRONT VIEW

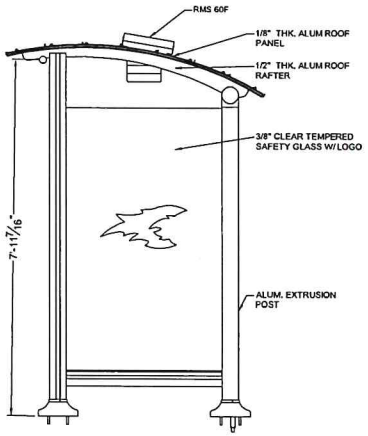

SIDE VIEW

GENERAL NOTES:

1. ALL STRUCTURAL STEEL, UNLESS OTHERWISE NOTED, SHALL BE ASTM A-36, MINIMUM YIELD STRENGTH 36,000 PSI.
2. ALL STRUCTURAL ALUMINUM MEMBERS, UNLESS OTHERWISE NOTED, SHALL BE OF ALLOY 6063-T5 OR GREATER.
3. ALL HOLES TO BE DRILLED OR PUNCHED.
4. STEEL WELDING SHALL CONFORM TO AMERICAN WELDING SOCIETY STANDARD D1. 1-10. ELECTRODES SHALL CONFORM TO AWS 5.1, CLASS E705-5.
5. ALUMINUM WELDING SHALL CONFORM TO AMERICAN WELDING SOCIETY STANDARD D1. 2-08. ELECTRODES SHALL CONFORM TO AWS/SFA 5.10 CLASS ER4043.
6. ALL WELDING TO BE DONE AT TOLAR MANUFACTURING COMPANY, INC. FACILITY.

THE DESIGN AND DRAWINGS REMAIN THE INTELLECTUAL PROPERTY OF TOLAR MFG. AND ARE PROTECTED BY LAW. THEY MAY NOT BE ALTERED, REPRODUCED OR USED FOR FABRICATION WITHOUT EXPRESSED WRITTEN CONSENT FROM TOLAR MFG. ALL DOCUMENTS TO BE RETURNED TO TOLAR MFG. AT COMPLETION OF WORK. CONTRACTOR TO SITE VERIFY ALL DETAILS AND DIMENSIONS AND REPORT ANY AND ALL DISCREPANCIES TO TOLAR MFG. BEFORE COMMENCING WITH THAT RELATED PORTION OF THE WORK.

TOLAR MANUFACTURING COMPANY, INC
258 Mariah Circle, Corona CA, 92879

DESCRIPTION: 16' AD CUSTOM SUNSET SHELTER
CUSTOMER/VENDOR: COLUMBIA, SC
SIZE: D | MATL. | DWG NO. 33271-00 | REV -
SCALE: NOTED | DATE: 10/9/2018 | DRAWN BY: randrade

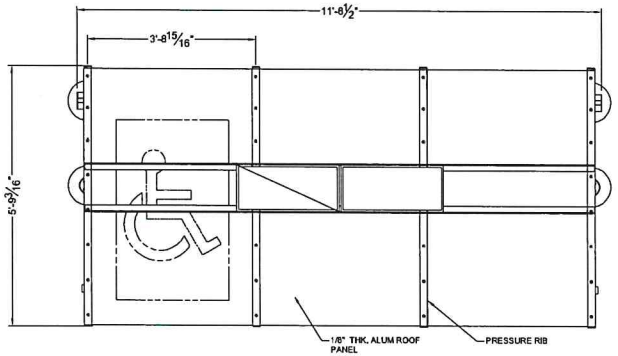

TOP VIEW

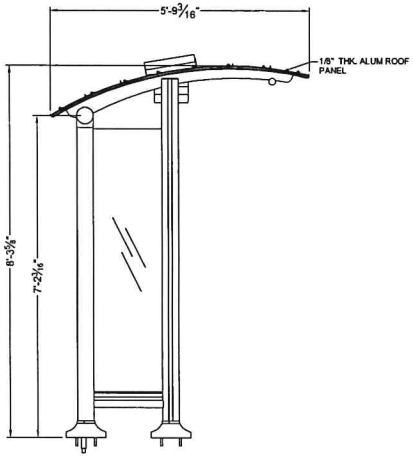

SIDE VIEW

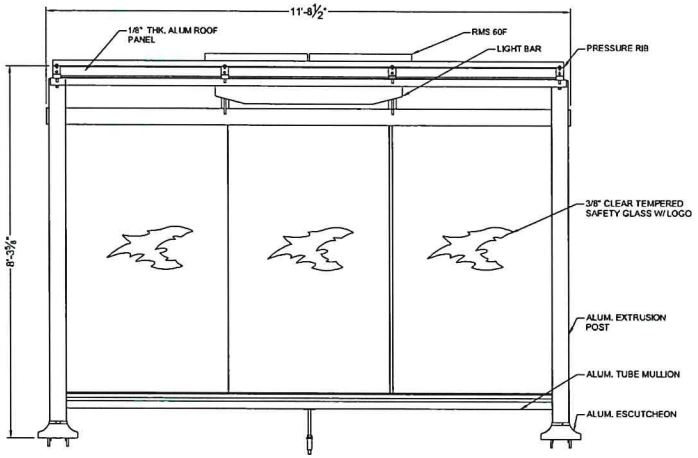

FRONT VIEW

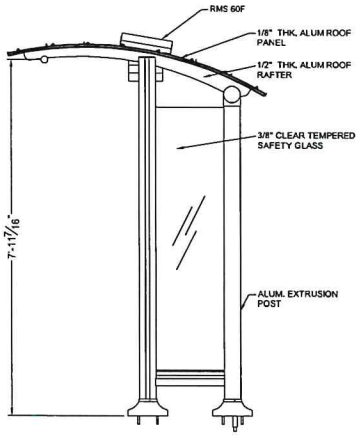

SIDE VIEW

GENERAL NOTES:

1. ALL STRUCTURAL STEEL, UNLESS OTHERWISE NOTED, SHALL BE ASTM A-36, MINIMUM YIELD STRENGTH 36,000 PSI.
2. ALL STRUCTURAL ALUMINUM MEMBERS, UNLESS OTHERWISE NOTED, SHALL BE OF ALLOY 6063-T5 OR GREATER.
3. ALL HOLES TO BE DRILLED OR PUNCHED.
4. STEEL WELDING SHALL CONFORM TO AMERICAN WELDING SOCIETY STANDARD D1. 1-10. ELECTRODES SHALL CONFORM TO AWS 5.1, CLASS E70S-5.
5. ALUMINUM WELDING SHALL CONFORM TO AMERICAN WELDING SOCIETY STANDARD D1. 2-08. ELECTRODES SHALL CONFORM TO AWS/SFA 5.10 CLASS ER4043.
6. ALL WELDING TO BE DONE AT TOLAR MANUFACTURING COMPANY, INC. FACILITY.

THE DESIGN AND DRAWINGS REMAIN THE INTELLECTUAL PROPERTY OF TOLAR MFG. AND ARE PROTECTED BY LAW. THEY MAY NOT BE ALTERED, REPRODUCED OR USED FOR FABRICATION WITHOUT EXPRESSED WRITTEN CONSENT FROM TOLAR MFG. ALL DOCUMENTS TO BE RETURNED TO TOLAR MFG. AT COMPLETION OF WORK. CONTRACTOR TO SITE VERIFY ALL DETAILS AND DIMENSIONS AND REPORT ANY AND ALL DISCREPANCIES TO TOLAR MFG. BEFORE COMMENCING WITH THAT RELATED PORTION OF THE WORK.

TOLAR MANUFACTURING COMPANY, INC
258 Mariah Circle, Corona CA, 92879

DESCRIPTION: 12' NON AD CUSTOM SUNSET SHELTER
CUSTOMER/VENDOR: COLUMBIA, SC
SIZE: D | MATL: | DWG NO.: 33273-00 | REV: -
SCALE: NOTED | DATE: 10/9/2018 | DRAWN BY: randrade

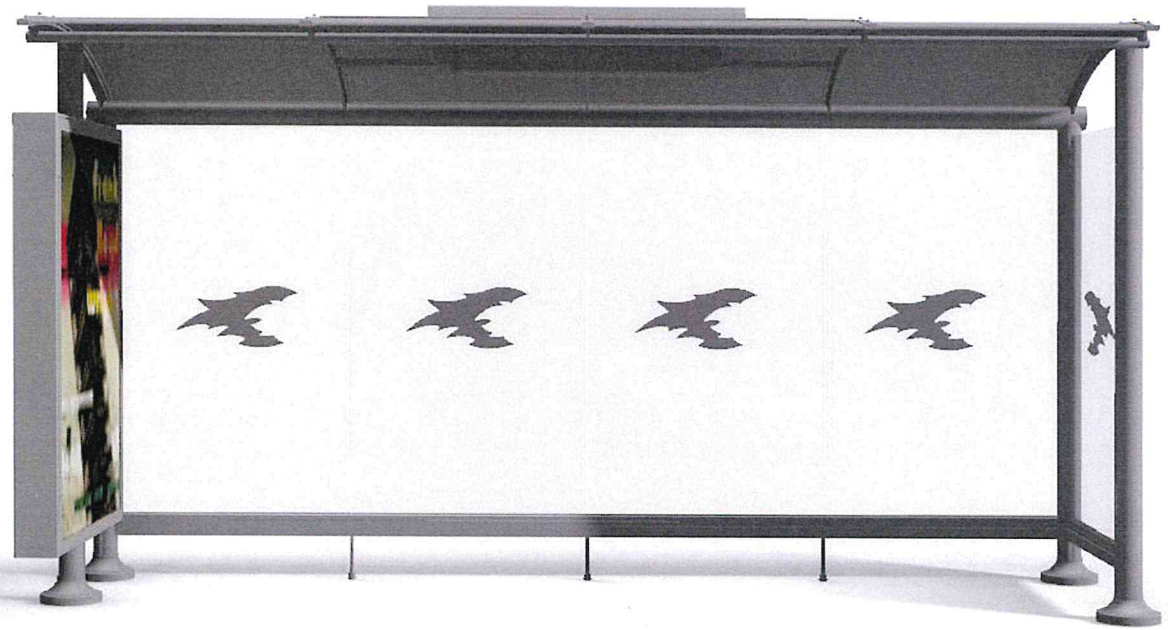

frank
lloyd
wright

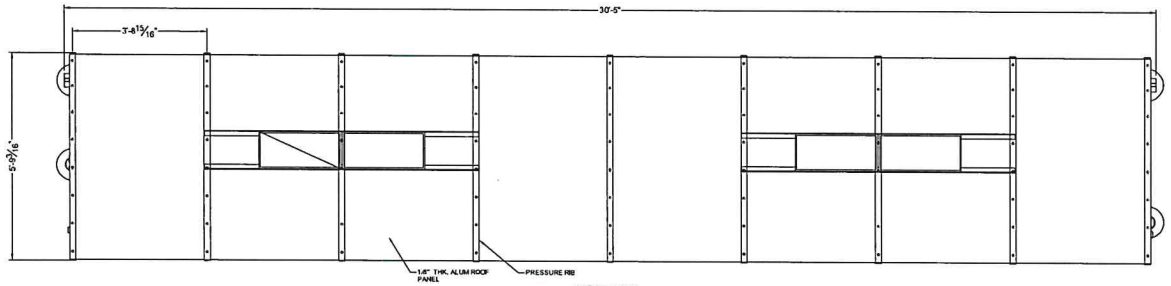

TOP VIEW

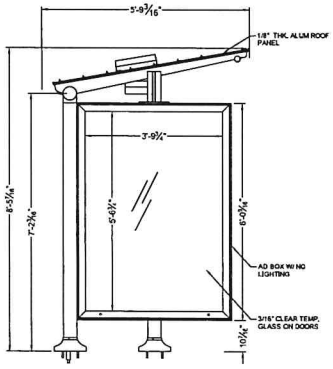

SIDE VIEW

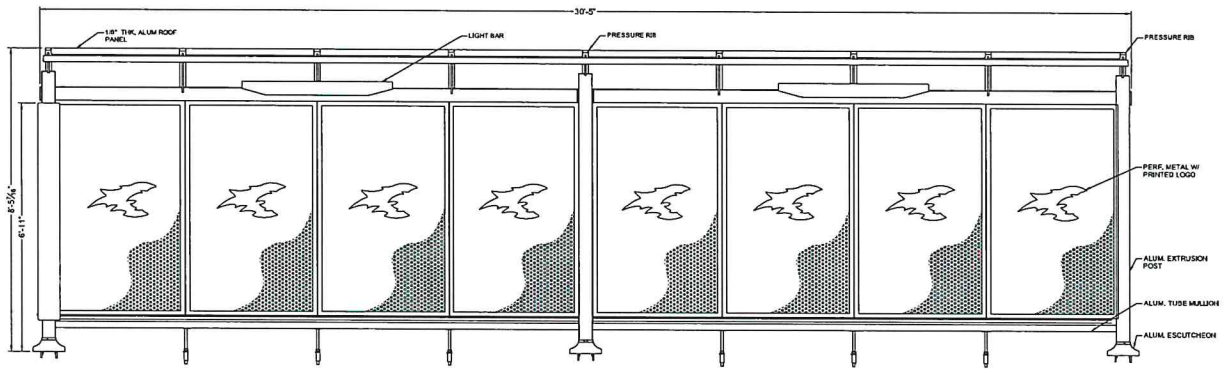

FRONT VIEW

FRONT VIEW

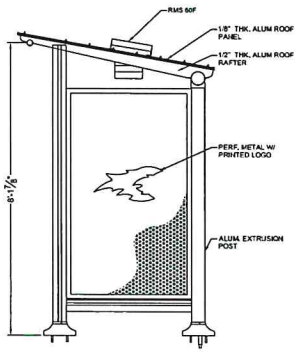

SIDE VIEW

GENERAL NOTES:

1. ALL STRUCTURAL STEEL, UNLESS OTHERWISE NOTED, SHALL BE ASTM A-36, MINIMUM YIELD STRENGTH 36,000 PSI.
2. ALL STRUCTURAL ALUMINUM MEMBERS, UNLESS OTHERWISE NOTED, SHALL BE OF ALLOY 6063-T5 OR GREATER.
3. ALL HOLES TO BE DRILLED OR PUNCHED.
4. STEEL WELDING SHALL CONFORM TO AMERICAN WELDING SOCIETY STANDARD D1. 1-10. ELECTRODES SHALL CONFORM TO AWS S.1. CLASS E70S-6.
5. ALUMINUM WELDING SHALL CONFORM TO AMERICAN WELDING SOCIETY STANDARD D1. 2-08. ELECTRODES SHALL CONFORM TO AWS/SFA 5.10 CLASS ER4043.
6. ALL WELDING TO BE DONE AT TOLAR MANUFACTURING COMPANY, INC. FACILITY.

THE DESIGN AND DRAWINGS REMAIN THE INTELLECTUAL PROPERTY OF TOLAR MFG. AND ARE PROTECTED BY LAW. THEY MAY NOT BE ALTERED, REPRODUCED OR USED FOR FABRICATION WITHOUT EXPRESSED WRITTEN CONSENT FROM TOLAR MFG. ALL DOCUMENTS TO BE RETURNED TO TOLAR MFG. AT COMPLETION OF WORK. CONTRACTOR TO SITE VERIFY ALL DETAILS AND DIMENSIONS AND REPORT ANY AND ALL DISCREPANCIES TO TOLAR MFG. BEFORE COMMENCING WITH THAT RELATED PORTION OF THE WORK.

TOLAR MANUFACTURING COMPANY, INC
258 Marlah Circle, Corona CA. 92879

DESCRIPTION: 30' AD CUSTOM EMPIRE SHELTER
CUSTOMER/VENDOR: COLUMBIA, SC
SIZE: D | MATL.: | DWG NO.: 33275-00 | REV: -
SCALE: NOTED | DATE: 10/11/2018 | DRAWN BY: raindrade

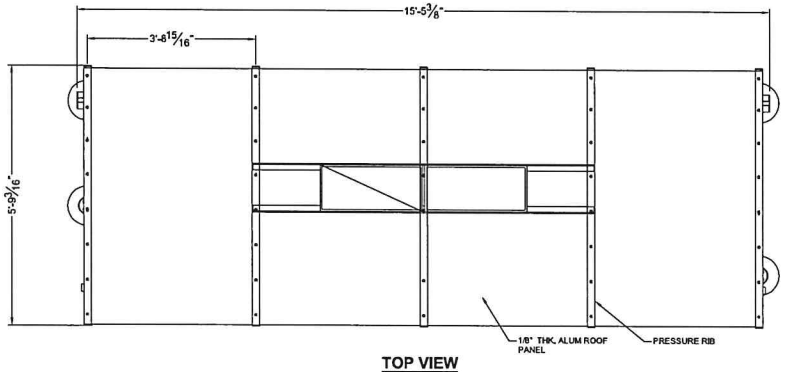

TOP VIEW

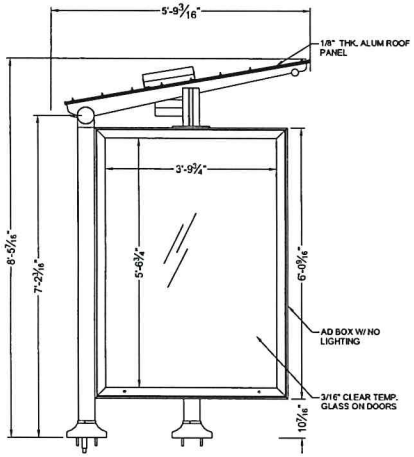

SIDE VIEW

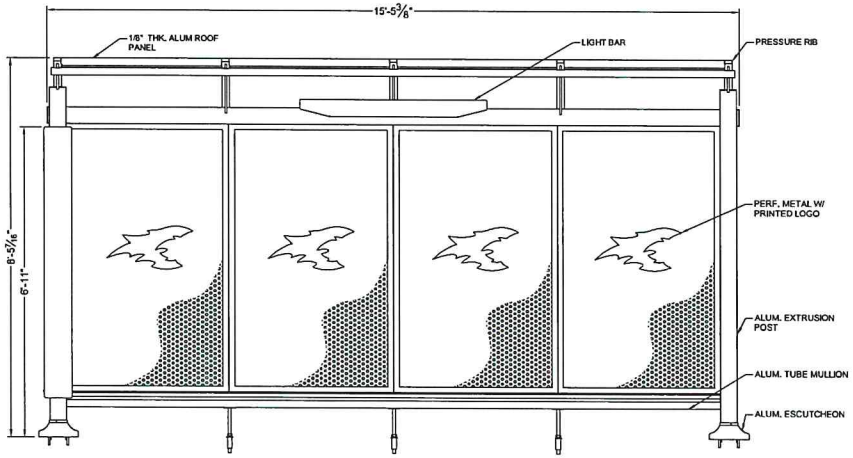

FRONT VIEW

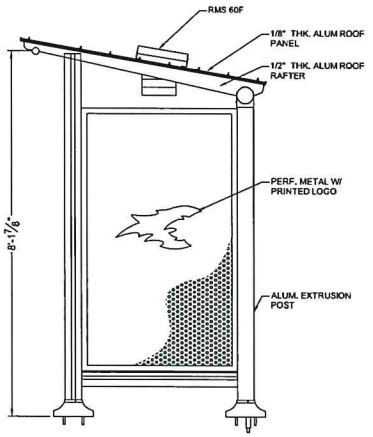

SIDE VIEW

GENERAL NOTES:

1. ALL STRUCTURAL STEEL, UNLESS OTHERWISE NOTED, SHALL BE ASTM A-36, MINIMUM YIELD STRENGTH 36,000 PSI.
2. ALL STRUCTURAL ALUMINUM MEMBERS, UNLESS OTHERWISE NOTED, SHALL BE OF ALLOY 6063-T5 OR GREATER.
3. ALL HOLES TO BE DRILLED OR PUNCHED.
4. STEEL WELDING SHALL CONFORM TO AMERICAN WELDING SOCIETY STANDARD D1. 1-10. ELECTRODES SHALL CONFORM TO AWS 5.1, CLASS E705-5.
5. ALUMINUM WELDING SHALL CONFORM TO AMERICAN WELDING SOCIETY STANDARD D1. 2-08. ELECTRODES SHALL CONFORM TO AWS/SFA 5.10 CLASS ER4043.
6. ALL WELDING TO BE DONE AT TOLAR MANUFACTURING COMPANY, INC. FACILITY.

THE DESIGN AND DRAWINGS REMAIN THE INTELLECTUAL PROPERTY OF TOLAR MFG. AND ARE PROTECTED BY LAW. THEY MAY NOT BE ALTERED. REPRODUCED OR USED FOR FABRICATION WITHOUT EXPRESSED WRITTEN CONSENT FROM TOLAR MFG. ALL DOCUMENTS TO BE RETURNED TO TOLAR MFG. AT COMPLETION OF WORK. CONTRACTOR TO SITE VERIFY ALL DETAILS AND DIMENSIONS AND REPORT ANY AND ALL DISCREPANCIES TO TOLAR MFG. BEFORE COMMENCING WITH THAT RELATED PORTION OF THE WORK.

TOLAR MANUFACTURING COMPANY, INC
258 Mariah Circle, Corona CA, 92879

DESCRIPTION	16' AD CUSTOM EMPIRE SHELTER
CUSTOMER/VENDOR	COLUMBIA, SC
SIZE	D
MATL.	
DWG NO.	33274-00
REV	-
SCALE	NOTED
DATE	10/11/2018
DRAWN BY	randrade

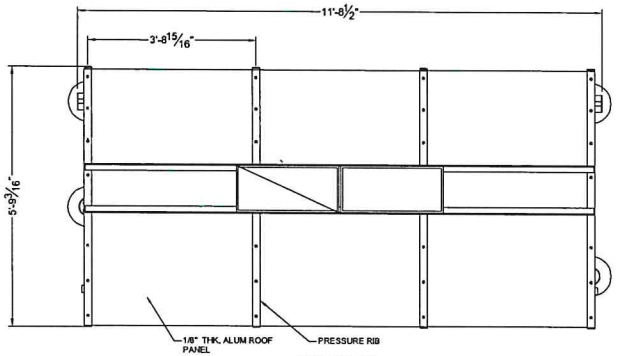

TOP VIEW

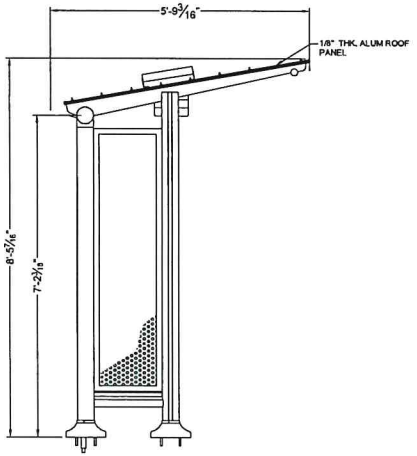

SIDE VIEW

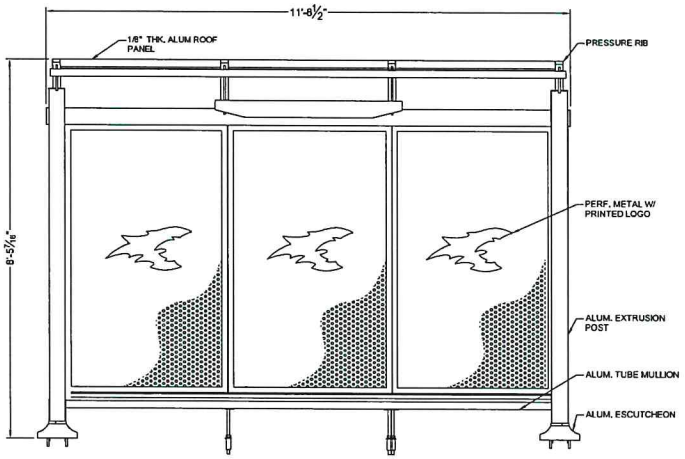

FRONT VIEW

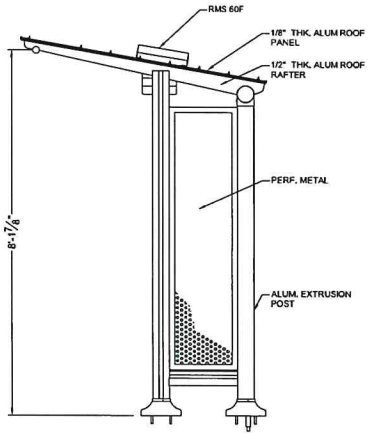

SIDE VIEW

GENERAL NOTES:

1. ALL STRUCTURAL STEEL, UNLESS OTHERWISE NOTED, SHALL BE ASTM A-36, MINIMUM YIELD STRENGTH 36,000 PSI.
2. ALL STRUCTURAL ALUMINUM MEMBERS, UNLESS OTHERWISE NOTED, SHALL BE OF ALLOY 6063-T5 OR GREATER.
3. ALL HOLES TO BE DRILLED OR PUNCHED.
4. STEEL WELDING SHALL CONFORM TO AMERICAN WELDING SOCIETY STANDARD D1. 1-10. ELECTRODES SHALL CONFORM TO AWS 5.1, CLASS E705-5.
5. ALUMINUM WELDING SHALL CONFORM TO AMERICAN WELDING SOCIETY STANDARD D1. 2-08. ELECTRODES SHALL CONFORM TO AWS/SFA 5.10 CLASS ER4043.
6. ALL WELDING TO BE DONE AT TOLAR MANUFACTURING COMPANY, INC. FACILITY.

THE DESIGN AND DRAWINGS REMAIN THE INTELLECTUAL PROPERTY OF TOLAR MFG. AND ARE PROTECTED BY LAW. THEY MAY NOT BE ALTERED, REPRODUCED OR USED FOR FABRICATION WITHOUT EXPRESSED WRITTEN CONSENT FROM TOLAR MFG. ALL DOCUMENTS TO BE RETURNED TO TOLAR MFG. AT COMPLETION OF WORK. CONTRACTOR TO SITE VERIFY ALL DETAILS AND DIMENSIONS AND REPORT ANY AND ALL DISCREPANCIES TO TOLAR MFG. BEFORE COMMENCING WITH THAT RELATED PORTION OF THE WORK.

TOLAR MANUFACTURING COMPANY, INC
258 Mariah Circle, Corona CA, 92879

DESCRIPTION: 12' NON AD CUSTOM EMPIRE SHELTER
CUSTOMER/VENDOR: COLUMBIA, SC
SIZE: D | MATL. | DWG NO. 33276-00 | REV -
SCALE: NOTED | DATE: 10/11/2018 | DRAWN BY: randrade

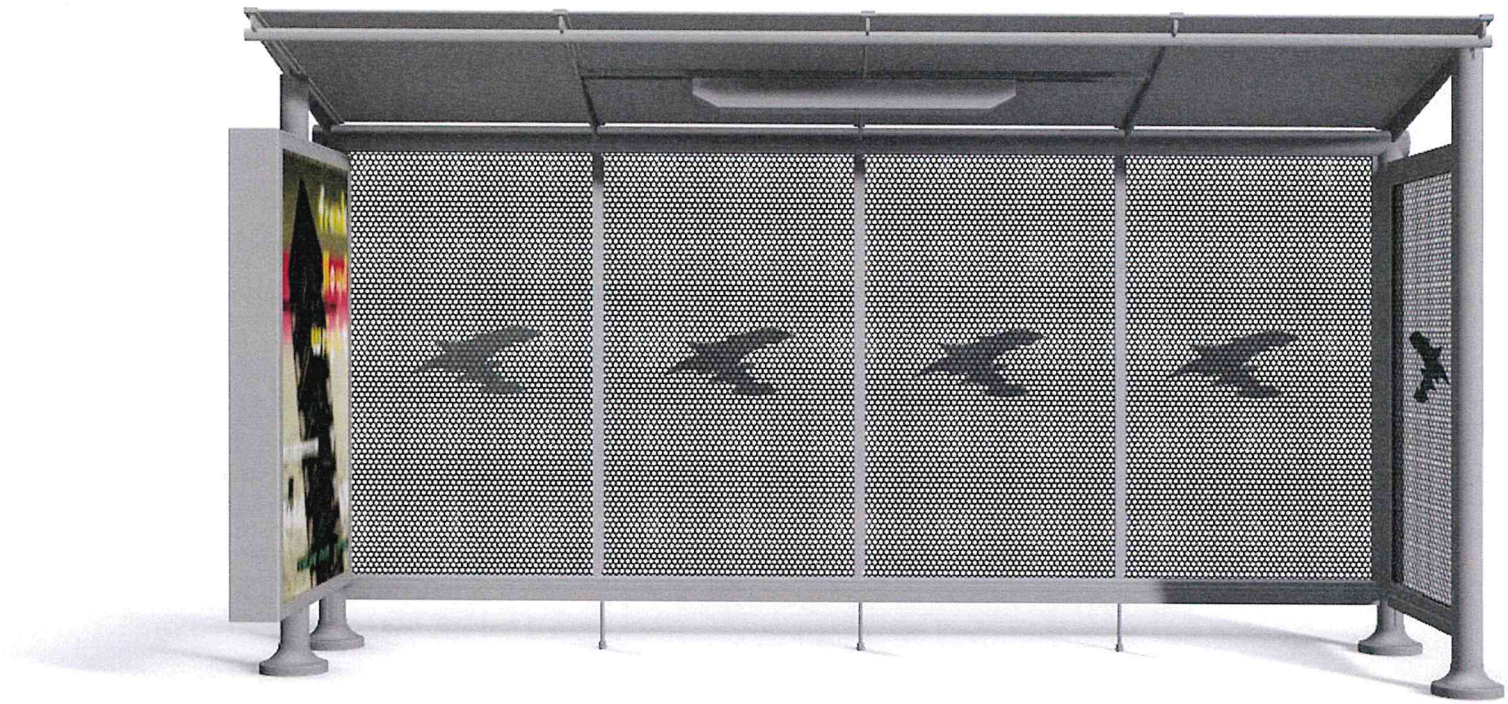

frank
lloyd
wright

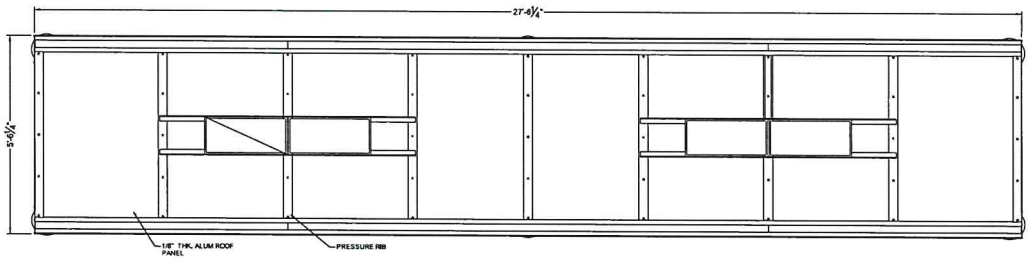

TOP VIEW

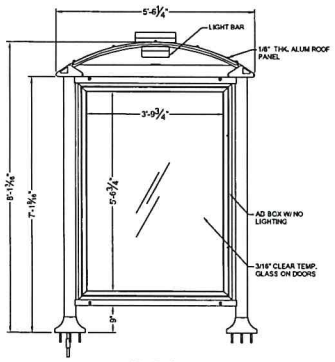

SIDE VIEW

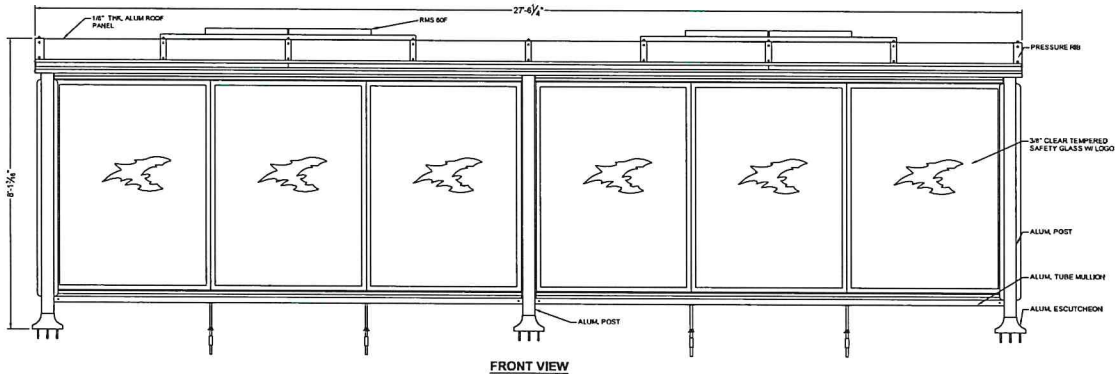

FRONT VIEW

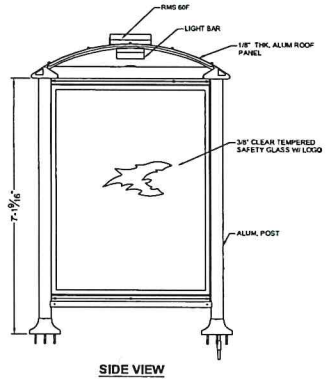

SIDE VIEW

GENERAL NOTES:

1. ALL STRUCTURAL STEEL, UNLESS OTHERWISE NOTED, SHALL BE ASTM A-36, MINIMUM YIELD STRENGTH 36,000 PSI.
2. ALL STRUCTURAL ALUMINUM MEMBERS, UNLESS OTHERWISE NOTED, SHALL BE OF ALLOY 6063-T5 OR GREATER.
3. ALL HOLES TO BE DRILLED OR PUNCHED.
4. STEEL WELDING SHALL CONFORM TO AMERICAN WELDING SOCIETY STANDARD D1. 1-10. ELECTRODES SHALL CONFORM TO AWS S.1, CLASS E70S-6.
5. ALUMINUM WELDING SHALL CONFORM TO AMERICAN WELDING SOCIETY STANDARD D1. 2-08. ELECTRODES SHALL CONFORM TO AWS/SFA 5.10 CLASS ER4043.
6. ALL WELDING TO BE DONE AT TOLAR MANUFACTURING COMPANY, INC. FACILITY.

THE DESIGN AND DRAWINGS REMAIN THE INTELLECTUAL PROPERTY OF TOLAR MFG. AND ARE PROTECTED BY LAW. THEY MAY NOT BE ALTERED, REPRODUCED OR USED FOR FABRICATION WITHOUT EXPRESSED WRITTEN CONSENT FROM TOLAR MFG. ALL DOCUMENTS TO BE RETURNED TO TOLAR MFG. AT COMPLETION OF WORK. CONTRACTOR TO SITE VERIFY ALL DETAILS AND DIMENSIONS AND REPORT ANY AND ALL DISCREPANCIES TO TOLAR MFG. BEFORE COMMENCING WITH THAT RELATED PORTION OF THE WORK.

TOLAR MANUFACTURING COMPANY, INC
258 Mariah Circle, Corona CA, 92879

DESCRIPTION: 28' AD CUSTOM EURO SHELTER
CUSTOMER/VENDOR: COLUMBIA, SC
SIZE: D | MATL. | DWG NO. 33276-00 | REV -
SCALE: NOTED | DATE: 10/11/2018 | DRAWN BY: randrade

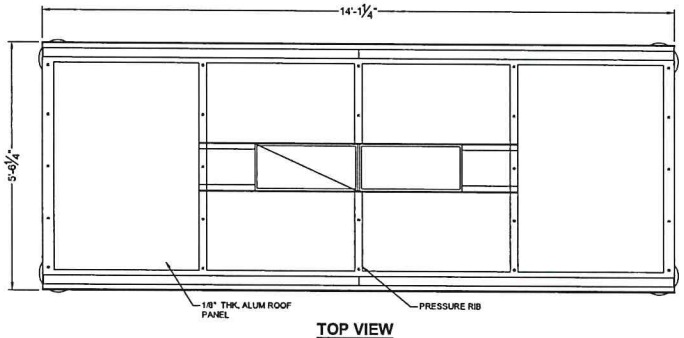

TOP VIEW

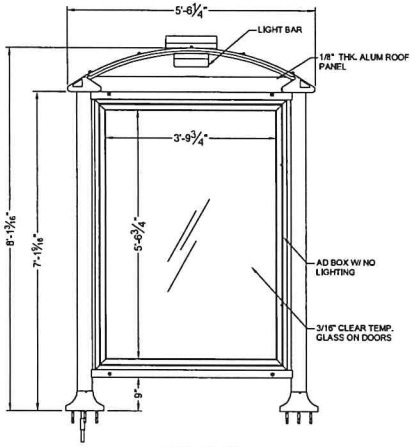

SIDE VIEW

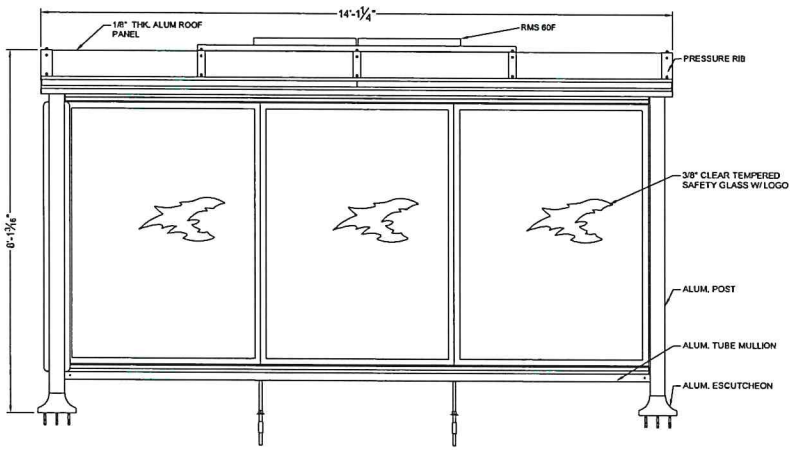

FRONT VIEW

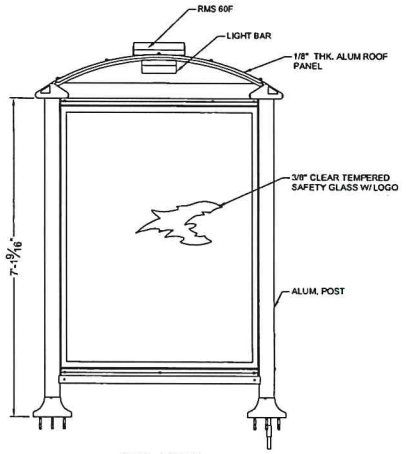

SIDE VIEW

GENERAL NOTES:

1. ALL STRUCTURAL STEEL, UNLESS OTHERWISE NOTED, SHALL BE ASTM A-36, MINIMUM YIELD STRENGTH 36,000 PSI.
2. ALL STRUCTURAL ALUMINUM MEMBERS, UNLESS OTHERWISE NOTED, SHALL BE OF ALLOY 6063-T5 OR GREATER.
3. ALL HOLES TO BE DRILLED OR PUNCHED.
4. STEEL WELDING SHALL CONFORM TO AMERICAN WELDING SOCIETY STANDARD D1. 1-10. ELECTRODES SHALL CONFORM TO AWS 5.1, CLASS E705-5.
5. ALUMINUM WELDING SHALL CONFORM TO AMERICAN WELDING SOCIETY STANDARD D1. 2-08. ELECTRODES SHALL CONFORM TO AWS/SFA 5.10 CLASS ER4043.
6. ALL WELDING TO BE DONE AT TOLAR MANUFACTURING COMPANY, INC. FACILITY.

THE DESIGN AND DRAWINGS REMAIN THE INTELLECTUAL PROPERTY OF TOLAR MFG. AND ARE PROTECTED BY LAW. THEY MAY NOT BE ALTERED, REPRODUCED OR USED FOR FABRICATION WITHOUT EXPRESSED WRITTEN CONSENT FROM TOLAR MFG. ALL DOCUMENTS TO BE RETURNED TO TOLAR MFG. AT COMPLETION OF WORK. CONTRACTOR TO SITE VERIFY ALL DETAILS AND DIMENSIONS AND REPORT ANY AND ALL DISCREPANCIES TO TOLAR MFG. BEFORE COMMENCING WITH THAT RELATED PORTION OF THE WORK.

TOLAR MANUFACTURING COMPANY, INC
258 Marlah Circle, Corona CA, 92879

DESCRIPTION: 16' AD CUSTOM EURO SHELTER
CUSTOMER/VENDOR: COLUMBIA, SC
SIZE: D | MATL.: | DWG NO.: 33277-00 | REV: -
SCALE: NOTED | DATE: 10/11/2018 | DRAWN BY: randrade

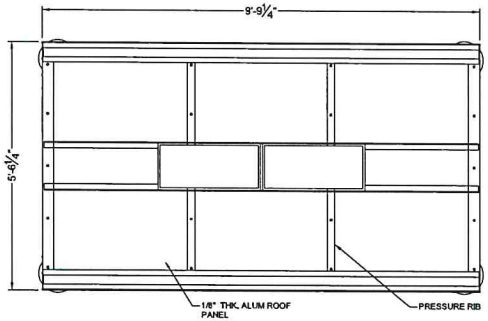

TOP VIEW

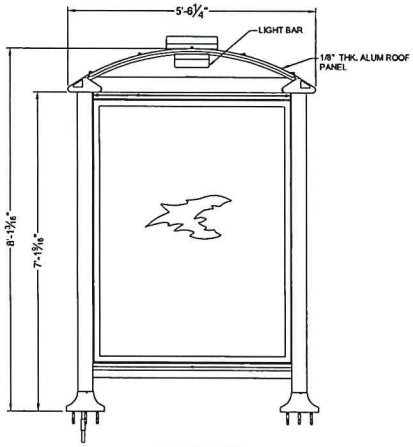

SIDE VIEW

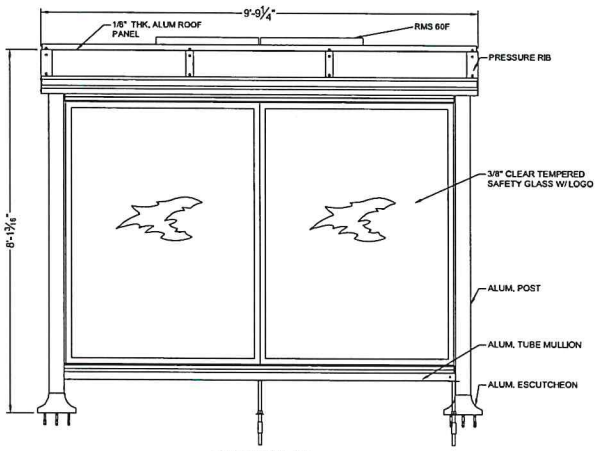

FRONT VIEW

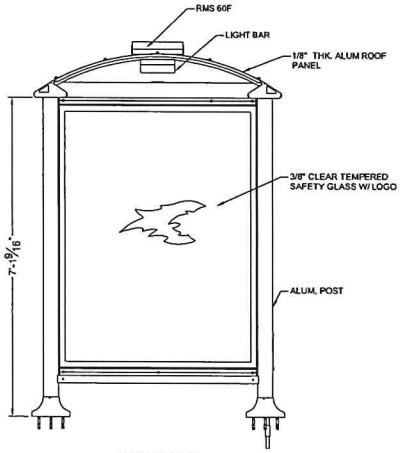

SIDE VIEW

GENERAL NOTES:

1. ALL STRUCTURAL STEEL, UNLESS OTHERWISE NOTED, SHALL BE ASTM A-36, MINIMUM YIELD STRENGTH 36,000 PSI.
2. ALL STRUCTURAL ALUMINUM MEMBERS, UNLESS OTHERWISE NOTED, SHALL BE OF ALLOY 6063-T5 OR GREATER.
3. ALL HOLES TO BE DRILLED OR PUNCHED.
4. STEEL WELDING SHALL CONFORM TO AMERICAN WELDING SOCIETY STANDARD D1. 1-10. ELECTRODES SHALL CONFORM TO AWS 5.1, CLASS E70S-5.
5. ALUMINUM WELDING SHALL CONFORM TO AMERICAN WELDING SOCIETY STANDARD D1. 2-08. ELECTRODES SHALL CONFORM TO AWS/SFA 5.10 CLASS ER4043.
6. ALL WELDING TO BE DONE AT TOLAR MANUFACTURING COMPANY, INC. FACILITY.

THE DESIGN AND DRAWINGS REMAIN THE INTELLECTUAL PROPERTY OF TOLAR MFG. AND ARE PROTECTED BY LAW. THEY MAY NOT BE ALTERED, REPRODUCED OR USED FOR FABRICATION WITHOUT EXPRESSED WRITTEN CONSENT FROM TOLAR MFG. ALL DOCUMENTS TO BE RETURNED TO TOLAR MFG. AT COMPLETION OF WORK. CONTRACTOR TO SITE VERIFY ALL DETAILS AND DIMENSIONS AND REPORT ANY AND ALL DISCREPANCIES TO TOLAR MFG. BEFORE COMMENCING WITH THAT RELATED PORTION OF THE WORK.

TOLAR MANUFACTURING COMPANY, INC
258 Marlah Circle, Corona CA. 92879

DESCRIPTION: 10' NON AD CUSTOM EURO SHELTER

CUSTOMER/VENDOR: COLUMBIA, SC

SIZE	MATL.	DWG NO.	REV
D		33279-00	-

SCALE	DATE	DRAWN BY
NOTED	10/11/2018	randrade

frank
lloyd
wright

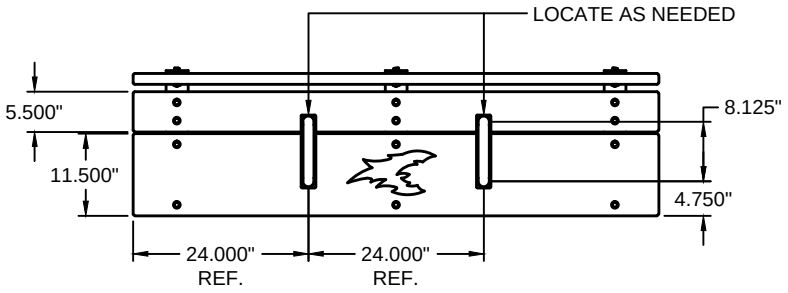

PLAN VIEW

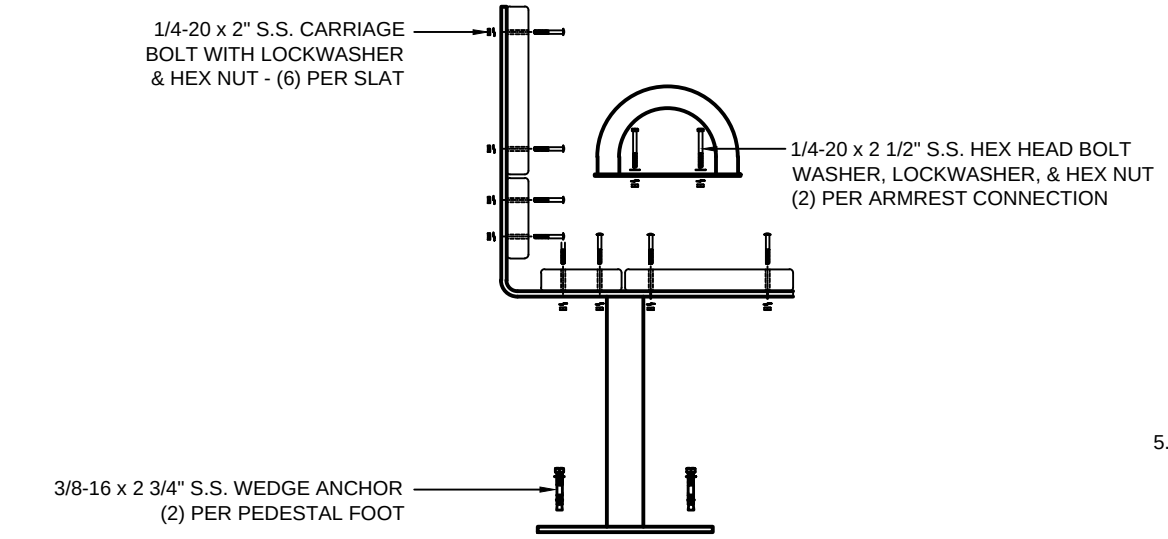

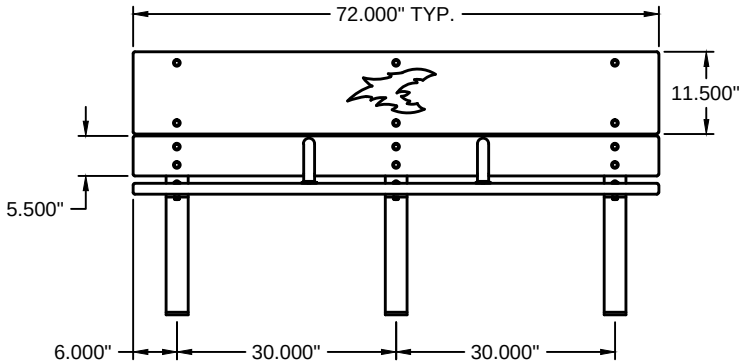

FRONT ELEVATION

-- BENCH LAYOUT.

BRASCO INTERNATIONAL, INC.
32400 INDUSTRIAL DRIVE
MADISON HEIGHTS, MICHIGAN 48071
1–800–893–3665 WWW.BRASCO.COM

THIS DRAWING IS PROPRIETARY AND IS FOR THE SOLE USE OF OUR CUSTOMERS AND MAY NOT BE REPRODUCED OR COPIED WITHOUT WRITTEN PERMISSION FROM BRASCO INTERNATIONAL.

LEAD TIME BEGINS UPON RECEIPT OF SIGNED APPROVAL.

SIGNED:_____ DATE:_____

CUSTOMER:	CENTRAL MIDLANDS TRANSIT			ENGINEER:	HAUS
				DATE:	7-21-14
				CHECKER:	BDH
PROJECT:	INSTALLATION INSTRUCTIONS				
MODEL:	LEAN RAIL INSTALL	JOB #	3763	SHEET #:	INSTALL-9

ORDINANCE NO.: 2019-093

Consenting to the Inclusion of Property in a Multi-County Industrial/Business Park (Ballpark, LLC, 17.5 acres, Richland County TMS#11204-02-02, 11204-02-06, 11204-02-07 and 11204-02-42)

WHEREAS, the City of Columbia, South Carolina ("City"), is a body, politic and corporate located in Richland County, South Carolina ("County"); and,

WHEREAS, through Columbia City Council ("Council"), the City is entitled to exercise all the powers and privileges provided to municipal corporations in the State of South Carolina; and,

WHEREAS, the County and Fairfield County, South Carolina ("Fairfield"), entered into an Agreement for Designation of the I-77 Corridor Regional Industrial Park dated as of April 15, 2003 (the "Original Agreement"), which Original Agreement was amended and restated pursuant to the Amended and Restated Master Agreement dated as of September 1, 2018 (as so amended and restated, the "Park Agreement"); and,

WHEREAS, pursuant to Section 1.02 of the Park Agreement, the boundaries of the park created therein (the "Park") may be enlarged pursuant to ordinances of the respective County Councils of the County and Fairfield County; and,

WHEREAS, Ballpark, LLC, a South Carolina limited liability company ("Developer"), proposes to establish market rate housing and retail facilities within the County, consisting of taxable investments in real and personal property of not less than $50,000,000 (the "Project") on property located in the City, as more particularly described on Exhibit A (the "Property") as contemplated by an ordinance which received approval upon first reading by Richland County Council on October 15, 2019; and,

WHEREAS, the County has agreed to offer a public infrastructure credit to reduce the property taxes due on the Project (as more particularly defined herein, "Credit") pursuant to the terms of Section 4-1-175 of the Code of Laws of South Carolina 1976, as amended ("Credit Act"), and a public infrastructure credit agreement between the County and the Developer for the Property ("Credit Agreement") to provide Credits against certain of the Developer's payments in lieu of taxes with respect to the Project for the purpose of assisting in paying certain costs of designing, acquiring, constructing, improving or expanding public infrastructure (collectively, "Public Infrastructure"); and,

WHEREAS, to grant the Developer the full value of the Credit, the County desires to locate the Project in the Park the County has jointly developed with Fairfield, pursuant to Article VIII, Section 13(D) of the South Carolina Constitution and Section 4-1-170 of the of the Code of Laws of South Carolina, 1976, as amended ("Park Act" and, together with the Credit Act, "Act"); and,

WHEREAS, pursuant to the Act and the Park Agreement, following application of the Credit, the payments in lieu of taxes generated from the Project will be distributed on a pro-rata basis to the taxing entities in the County that, at the time the Project is included in the Park, are eligible to levy tax millage on the Project; and,

WHEREAS, pursuant to the Act, because the Project is located within the City's geographical borders, the City must consent to the inclusion of the Project within the boundaries of the Park; and,

WHEREAS, the Project is anticipated to meet the criteria set forth in Resolution No.: R-2019-059 and any amendments thereto, and it is appropriate to consent to including the Project in the Park; NOW, THEREFORE,

BE IT ORDAINED by the Mayor and City Council this __ day of _____, 2019 that the City hereby consents to the inclusion of the Property in the Park, which consent is conditioned upon the following:

1. The County's adoption, by resolution or ordinance, authorizing the inclusion of the Property in the Park and delivery of written notice to the Companion County (as defined in the Park Agreement) thereof, pursuant to Section 1.02 of the Park Agreement; provided, the Property shall not be removed from the Park for so long as the Developer is receiving Credits as a result of inclusion in the Park.

2. The County's approval, execution and delivery of the Credit Agreement related to the Property.

3. The Credit Agreement will provide that (a) the Developer will make payments in lieu of taxes related to the Property ("PILOT") during the term of the Credit Agreement, which PILOT shall be based on property tax assessment of the Property of six percent; (b) the annual PILOT payment payable from the Developer to the County will be subject to reduction by a 50% infrastructure credit (herein defined as the "Credit") to reimburse the Developer's Public Infrastructure costs; (c) the term of the Credit Agreement shall not exceed ten years (unless consented to in writing by the City), beginning with the first full year for which the Developer owes an annual PILOT payment following receipt by the Developer of a Certificate of Occupancy for the Project; (d) in each year during the term of the Credit Agreement, the City will be entitled to receive the portion of the PILOT payment (net of the Credit, as applicable) as provided in the Park Agreement; and (e) the Property will be deemed removed from the Park upon the expiration or earlier termination of the Credit Agreement.

4. Notwithstanding the foregoing, if the Project proceeds in a phased approach, (a) the first phase must meet the criteria established in Resolution No.: R-2019-059 to be eligible for the abatement, (b) the time limit for the Project abatement period as allowed in this Ordinance shall begin the first full year for which the Developer owes a FILOT payment, and the timeline for additional phases shall be for the period of time or abatement amount that remains available on the original period and shall not have a new beginning date.

5. The City Manager is authorized to execute any documents and take any further action as may be reasonably necessary to further the intent of this Ordinance.

6. Approval of this Ordinance does not constitute a development approval, as all regulatory permitting and approval requirements remain in effect, the requirement of such is not altered in any way by the approval of this Ordinance. The Project must proceed with credit application no later

than December 31, 2022 in order to be eligible to receive the Credit and must continue to progress forward at a reasonable pace for a project of this magnitude or else the approved tax credit will be repealed by the City.

7. Any prior ordinance, resolution or order, the terms of which are in conflict with this Ordinance, is, only to the extent of that conflict, repealed.

Requested by:

Assistant City Manager Gentry

Approved by:

City Manager

Mayor

Approved as to form:

Deputy City Attorney

ATTEST:

City Clerk

Introduced:
Final Reading:

DRAFT

ORDINANCE NO.: 2019-093
EXHIBIT A
PROPERTY DESCRIPTION

All those certain pieces, parcels or tracts of land situate, lying and being in the City of Columbia, County of Richland, State of South Carolina, and being more particularly shown and delineated on an ALTA/NSPS Land Title Survey prepared by Survey Matters, LLC dated November 21, 2018 as Project No. 18-167 and a plat prepared by Cox and Dinkins, Inc. dated June 4, 2019 as Project No. 9F79C-58.dwg,and according to such plats having the following measurements:

BEGINNING at an IPF located at the Northwest intersection of S. Assembly Street and Ferguson Street, said point being known as the POINT OF BEGINNING, thence proceeding S33°33'46"W for a distance of 259.08' to an IPINF; thence proceeding S33°59'43"W for a distance of 50.12' to an IPF; thence, proceeding N56°02'02"W for a distance of 124.66' to an IPF; thence, proceeding S33°12'17"W for a distance of 89.47' to an IPF; thence, proceeding S35°20'14"W for a distance of 148.32' to an IPINF; thence proceeding S35°01'13"W for a distance of 39.64'; thence proceeding S33°03'47"W for a distance of 11.49'; thence proceeding S35°05'09"W for a distance of 50.30'; thence proceeding S34°36'07"W for a distance of 50.00'; thence proceeding N55°49'02"W for a distance of 2.98' to an IPINF; thence proceeding S33°39'15"W for a distance of 166.06' to an IPINF; thence turning and proceeding N56°00'42"W for a distance of 357.27' to an IPF; thence proceeding N54°46'51W for a distance of 62.55' to an IPINF; thence turning and proceeding N34°04'49"E for a distance of 465.14; thence turning and proceeding N70°34'54"W for a distance of 63.37'; thence N52°57'06"W for a distance of 105.00'; thence proceeding N50°37'06"W for a distance of 132.54'; thence turning and proceeding N83°16'06"W for a distance of 88.24'; thence turning and proceeding N33°52'19"E for a distance of 300.12'; thence proceeding N30°02'39"E for a distance of 240.80' to an IPINS located at Dreyfus Road; thence turning and proceeding along Dreyfus Road N88°32'39"E for a distance of 35.47' to an IPINS; thence proceeding along Dreyfus Road in a curved line along a chord bearing S79°47'17"E for a chord distance of 114.59' and an arc distance of 114.79'; thence proceeding S85°40'24"E for a distance of 190.78' to NAILS located at the intersection of Dreyfus Road and S. Assembly Street; thence turning and proceeding along Assembly Street in a curved line along a chord bearing S51°40'37"E for a chord distance of 127.17' and an arc distance of 127.52'; thence proceeding S59°01'48"E for a distance of 150.54'; thence S59°01'48"E for a distance of 50.00'; thence S59°01'48"E for a distance of 289.52' to the POINT OF BEGINNING.

PUBLIC INFRASTRUCTURE CREDIT AGREEMENT

by and between

RICHLAND COUNTY, SOUTH CAROLINA

and

BALLPARK, LLC

Effective as of: _____, 2019

PUBLIC INFRASTRUCTURE CREDIT AGREEMENT

This PUBLIC INFRASTRUCTURE CREDIT AGREEMENT, effective as of _____. 2019 ("Agreement"), is by and between RICHLAND COUNTY, SOUTH CAROLINA, a body politic and corporate, and a political subdivision of the State of South Carolina ("County"), and BALLPARK, LLC, a South Carolina limited liability company ("Company" together with the County, "Parties," each, a "Party").

W I T N E S S E T H :

WHEREAS, the County, acting by and through its County Council ("County Council"), is authorized and empowered under and pursuant to the provisions of Article VIII, Section 13(D) of the South Carolina Constitution and the provisions of Title 4, Chapter 1 of the Code of Laws of South Carolina, 1976, as amended (collectively, "Act"), to (i) develop multicounty parks with counties having contiguous borders with the County; and (ii) include property in the multicounty park, which inclusion under the terms of the Act (A) makes such property exempt from *ad valorem* property taxes, and (B) changes the character of the annual receipts from such property to fees-in-lieu of *ad valorem* property taxes in an amount equal to the *ad valorem* taxes that would have been due and payable but for the location of the property in such multicounty park ("Fee Payments");

WHEREAS, the County is further authorized by Section 4-1-175 of the Act to grant credits against Fee Payments ("Public Infrastructure Credit") to pay costs of designing, acquiring, constructing, improving or expanding public infrastructure serving the County (collectively, "Public Infrastructure");

WHEREAS, pursuant to the authority provided in the Act, the County has developed with Fairfield County, South Carolina, the I-77 Corridor Regional Industrial Park ("Park") and executed the "Amended and Restated Master Agreement Governing the I-77 Corridor Regional Industrial Park" dated September 1, 2018 ("Park Agreement"), which governs the operation of the Park;

WHEREAS, the Company has committed to establish a market rate housing and retail facilities in the County ("Project") on property more particularly identified by Exhibit A ("Land"), consisting of taxable investment in real and personal property of not less than $50,000,000;

WHEREAS, by an ordinance enacted on _____, 2019 ("Ordinance"), the County authorized the expansion of the boundaries of the Park and an amendment to the Park Agreement to include the Land and other real and personal property relating to the Project ("Property") in the Park; and

WHEREAS, pursuant to the Ordinance, the County further authorized the execution and delivery of this Agreement to provide Public Infrastructure Credits against the Company's Fee Payments with respect to the Project for the purpose of assisting in paying the costs of certain Public Infrastructure invested by the Company at or in connection with the Project, subject to the terms and conditions below.

NOW, THEREFORE, in consideration of the respective representations and agreements hereinafter contained, the County and the Company agree as follows:

ARTICLE I
REPRESENTATIONS

Section 1.1. ***Representations by the County.*** The County represents to the Company as follows:

(a) The County is a body politic and corporate and a political subdivision of the State of South Carolina;

(b) The County is authorized and empowered by the provisions of the Act to enter into and carry out its obligations under this Agreement;

(c) The County has duly authorized and approved the execution and delivery of this Agreement by adoption of the Ordinance in accordance with the procedural requirements of the Act and any other applicable state law;

(d) The County is not in default of any of its obligations (contractual or otherwise) as a result of entering into and performing its obligations under this Agreement;

(e) The County has approved the inclusion of the Property in the Park; and

(f) Based on representations made by the Company to the County, the County has determined the Project and the Public Infrastructure will enhance the economic development of the County and promote the welfare of its citizens. Therefore, the County is entering into this Agreement for the purpose of promoting the economic development of the County and the welfare of its citizens.

Section 1.2. ***Representations and Covenants by the Company***. The Company represents to the County as follows:

(a) The Company is in good standing under the laws of the State of South Carolina, has power to conduct business in the State of South Carolina and enter into this Agreement, and by proper company action has authorized the officials signing this Agreement to execute and deliver it;

(b) The Company will use commercially reasonable efforts to achieve the Investment Commitment, each as defined below, at the Project;

(c) The Company's execution and delivery of this Agreement, and its compliance with the provisions of this Agreement do not result in a default under any agreement or instrument to which the Company is now a party or by which it is bound; and

(d) The Company covenants to complete the Public Infrastructure in a workmanlike manner and in accordance with all applicable codes and regulations.

ARTICLE II
PUBLIC INFRASTRUCTURE CREDITS

Section 2.1. ***Investment Commitment.*** The Company shall invest not less than $50,000,000 in taxable property at the Project ("Investment Commitment") by the Certification Date, as defined below. The Company shall certify to the County achievement of the Investment Commitment by no later than [DATE] ("Certification Date"), by providing documentation to the County sufficient to reflect achievement of the Investment Commitment. If the Company fails to achieve and certify the Investment Commitment by the Certification Date, the County may terminate this Agreement and, on termination, the

Company is no longer entitled to any further benefits under this Agreement. The County has the right to exclude

Section 2.2. ***Public Infrastructure Commitment.***

(a) Prior to receiving the Public Infrastructure Credits under this Agreement, the Company shall make an investment in Public Infrastructure in the County which may be comprised of the following improvements and facilities benefitting the public or dedicated to public use: water sewer, or stormwater improvements, greenspaces, recreation or community facilities, pedestrian or transportation facilities, parking facilities, facade redevelopment, roadway improvements, and energy production or communications technology infrastructure. Public Infrastructure may also include expenditures on the eradication of blight.

(b) The Company has committed to invest in the Public Infrastructure as described on Exhibit B. The Company shall certify its actual investment in the Public Infrastructure to the County by the Certification Date, by providing documentation to the County's Economic Development Department sufficient to reflect the amount invested in the Public Infrastructure. If the Company fails to complete the Public Infrastructure by the Certification Date, then the Company may not be entitled to the full value of the Public Infrastructure Credits as provided by this Agreement.

(c) Following the Certification Date, the County's Economic Development Department shall have 30 days ("Verification Date") to verify the Company's investment in the Public Infrastructure. The County has the right to exclude from the investment in Public Infrastructure certified by the Company any costs the County determines, in its sole discretion, to be ineligible costs. The County may also reject any Public Infrastructure investment as ineligible if the County determines, in its sole discretion, that it has not been completed in a workmanlike manner or in accordance with applicable codes or regulations. The County's Economic Development Department shall provide to the Company, by written notice, the County's determination of the verified amount of investment made by the Company in Public Infrastructure. Failure to provide a written verification shall be deemed to be a determination by the County that all costs certified by the Company are verified as eligible costs.

Section 2.3. ***Public Infrastructure Credits.***

(a) To assist in paying for costs of Public Infrastructure, the County shall provide a Public Infrastructure Credit against certain of the Company's Fee Payments due with respect to the Project, commencing with the first Fee Payment following the Verification Date. The term, amount and calculation of the Public Infrastructure Credit is described in Exhibit B.

(b) For each property tax year in which the Company is entitled to a Public Infrastructure Credit ("Credit Term"), the County shall prepare and issue the Company's annual bill with respect to the Project net of the Public Infrastructure Credit set forth in Section 2.3 (a) ("Net Fee Payment"). Following receipt of the bill, the Company shall timely remit the Net Fee Payment to the County in accordance with applicable law.

(c) THIS AGREEMENT AND THE PUBLIC INFRASTRUCTURE CREDITS PROVIDED BY THIS AGREEMENT ARE LIMITED OBLIGATIONS OF THE COUNTY. THE PUBLIC INFRASTRUCTURE CREDITS ARE DERIVED SOLELY FROM AND TO THE EXTENT OF THE FEE PAYMENTS MADE BY THE COMPANY TO THE COUNTY PURSUANT TO THE ACT AND THE PARK AGREEMENT. THE PUBLIC INFRASTRUCTURE CREDITS DO NOT AND SHALL NOT CONSTITUTE A GENERAL OBLIGATION OF THE COUNTY OR ANY MUNICIPALITY WITHIN THE MEANING OF ANY CONSTITUTIONAL OR STATUTORY LIMITATION AND DO

NOT AND SHALL NOT CONSTITUTE OR GIVE RISE TO A PECUNIARY LIABILITY OF THE COUNTY OR ANY MUNICIPALITY OR A CHARGE AGAINST THE GENERAL CREDIT OR TAXING POWER OF THE COUNTY OR ANY MUNICIPALITY. THE FULL FAITH, CREDIT, AND TAXING POWER OF THE COUNTY OR ANY MUNICIPALITY ARE NOT PLEDGED FOR THE PROVISION OF THE PUBLIC INFRASTRUCTURE CREDITS.

Section 2.4. ***Filings.*** To assist the County in administering the Public Infrastructure Credits, the Company shall, for the Credit Term, prepare and file a separate schedule to the SCDOR PT-100, PT-300 with respect to the Property. Additionally, the Company shall, on or before January 31 of each year during the Credit Term, commencing in January 31, 2020, deliver to the Economic Development Director of the County the information required by the terms of the County's Resolution dated December 12, 2017, which is attached hereto as Exhibit C, as may be amended by subsequent resolution, with respect to the Company.

Section 2.5 ***Cumulative Public Infrastructure Credit.*** The cumulative dollar amount of the Public Infrastructure Credit shall not exceed the amount invested by the Company in Public Infrastructure, as verified, or deemed verified, by the County as of the Verification Date. The County Economic Development Department shall provide the verified investment amount to the County Auditor for purposes of applying the Public Infrastructure Credit in accordance with Section 2.3 of this Agreement.

ARTICLE III
DEFAULTS AND REMEDIES

Section 3.1. ***Events of Default.*** The following are "Events of Default" under this Fee Agreement:

(a) Failure by the Company to make a Net Fee Payment, which failure has not been cured within 30 days following receipt of written notice from the County specifying the delinquency in payment and requesting that it be remedied;

(b) An abandonment or closure of the Project; For purposes of this Agreement, "abandonment or closure of the Project" means failure to place all or a portion of the project in service by December 31, 2023;

(c) A representation or warranty made by the Company which is deemed materially incorrect when deemed made;

(d) Failure by the Company to perform any of the terms, conditions, obligations, or covenants under this Agreement (other than those described in Sections 2.1 and 2.2 and under (a) above), which failure has not been cured within 30 days after written notice from the County to the Company specifying such failure and requesting that it be remedied, unless the Company has instituted corrective action within the 30-day period and is diligently pursuing corrective action until the default is corrected, in which case the 30-day period is extended to include the period during which the Company is diligently pursuing corrective action;

(e) A representation or warranty made by the County which is deemed materially incorrect when deemed made; or

(f) Failure by the County to perform any of the terms, conditions, obligations, or covenants hereunder, which failure has not been cured within 30 days after written notice from the Company to the County specifying such failure and requesting that it be remedied, unless the County has instituted

corrective action within the 30-day period and is diligently pursuing corrective action until the default is corrected, in which case the 30-day period is extended to include the period during which the County is diligently pursuing corrective action.

Section 3.2. ***Remedies on Default.***

(a) If an Event of Default by the Company has occurred and is continuing, then the County may take any one or more of the following remedial actions:

(i) terminate the Agreement; or

(ii) take whatever action at law or in equity may appear necessary or desirable to collect amounts due or otherwise remedy the Event of Default or recover its damages.

(b) If an Event of Default by the County has occurred and is continuing, the Company may take one or more of the following actions:

(i) bring an action for specific enforcement;

(ii) terminate the Agreement; or

(iii) in case of a materially incorrect representation or warranty, take such action as is appropriate, including legal action, to recover its damages, to the extent allowed by law.

Section 3.3. ***Reimbursement of Legal Fees and Other Expenses.*** On the occurrence of an Event of Default, if a Party is required to employ attorneys or incur other reasonable expenses for the collection of payments due under this Agreement or for the enforcement of performance or observance of any obligation or agreement, the prevailing Party is entitled to seek reimbursement of the reasonable fees of such attorneys and such other reasonable expenses so incurred.

Section 3.4. ***Remedies Not Exclusive***. No remedy described in this Agreement is intended to be exclusive of any other remedy or remedies, and each and every such remedy is cumulative and in addition to every other remedy given under this Agreement or existing at law or in equity or by statute.

Section 3.5. ***Nonwaiver.*** A delay or omission by the Company or County to exercise any right or power accruing on an Event of Default does not waive such right or power and is not deemed to be a waiver or acquiescence of the Event of Default. Every power and remedy given to the Company or County by this Agreement may be exercised from time to time and as often as may be deemed expedient.

ARTICLE IV
MISCELLANEOUS

Section 4.1. ***Examination of Records; Confidentiality.***

(a) The County and its authorized agents, at any reasonable time on prior notice, may enter and examine the Project and have access to and examine the Company's books and records relating to the Project for the purposes of (i) identifying the Project; (ii) confirming achievement of the Investment Commitment; (iii) verifying the investment in Public Infrastructure; and (iv) permitting the County to carry out its duties and obligations in its sovereign capacity (such as, without limitation, for such routine health and safety purposes as would be applied to any other manufacturing or commercial facility in the County).

(b) The County acknowledges that the Company may utilize confidential and proprietary processes and materials, services, equipment, trade secrets, and techniques ("Confidential Information") and that disclosure of the Confidential Information could result in substantial economic harm to the Company. The Company may clearly label any Confidential Information delivered to the County pursuant to this Agreement as "Confidential Information." Except as required by law, the County, or any employee, agent, or contractor of the County, shall not disclose or otherwise divulge any labeled Confidential Information to any other person, firm, governmental body or agency. The Company acknowledges that the County is subject to the South Carolina Freedom of Information Act, and, as a result, must disclose certain documents and information on request, absent an exemption. If the County is required to disclose any Confidential Information to a third party, the County will use its best efforts to provide the Company with as much advance notice as is reasonably possible of such disclosure requirement prior to making such disclosure and to cooperate reasonably with any attempts by the Company to obtain judicial or other relief from such disclosure requirement.

Section 4.2. ***Assignment.*** The Company may assign or otherwise transfer any of its rights and interest in this Agreement on prior written consent of the County, which may be given by resolution, and which consent will not be unreasonably withheld.

Section 4.3. ***Provisions of Agreement for Sole Benefit of County and Company.*** Except as otherwise specifically provided in this Agreement, nothing in this Agreement expressed or implied confers on any person or entity other than the County and the Company any right, remedy, or claim under or by reason of this Agreement, this Agreement being intended to be for the sole and exclusive benefit of the County and the Company.

Section 4.4. ***Severability.*** If any provision of this Agreement is declared illegal, invalid, or unenforceable for any reason, the remaining provisions of this Agreement are unimpaired, and the Parties shall reform such illegal, invalid, or unenforceable provision to effectuate most closely the legal, valid, and enforceable intent of this Agreement.

Section 4.5. ***Limitation of Liability.***

(a) The County is not liable to the Company for any costs, expenses, losses, damages, claims or actions in connection with this Agreement, except from amounts received by the County from the Company under this Agreement.

(b) All covenants, stipulations, promises, agreements and obligations of the County contained in this Agreement are binding on members of the County Council or any elected official, officer, agent, servant or employee of the County only in his or her official capacity and not in his or her individual capacity, and no recourse for the payment of any moneys or performance of any of the covenants and agreements under this Agreement or for any claims based on this Agreement may be had against any member of County Council or any elected official, officer, agent, servant or employee of the County except solely in their official capacity.

Section 4.6. ***Indemnification Covenant.***

(a) Except as provided in paragraph (d) below, the Company shall indemnify and save the County, its employees, elected officials, officers and agents (each, an "Indemnified Party") harmless against and from all liability or claims arising from the County's execution of this Agreement, performance of the County's obligations under this Agreement or the administration of its duties pursuant to this Agreement, or otherwise by virtue of the County having entered into this Agreement.

(b) The County is entitled to use counsel of its choice and the Company shall reimburse the County for all of its costs, including attorneys' fees, incurred in connection with the response to or defense against such liability or claims as described in paragraph (a) above. The County shall provide a statement of the costs incurred in the response or defense, and the Company shall pay the County within 30 days of receipt of the statement. The Company may request reasonable documentation evidencing the costs shown on the statement. However, the County is not required to provide any documentation which may be privileged or confidential to evidence the costs.

(c) The County may request the Company to resist or defend against any claim on behalf of an Indemnified Party. On such request, the Company shall resist or defend against such claim on behalf of the Indemnified Party, at the Company's expense. The Company is entitled to use counsel of its choice, manage and control the defense of or response to such claim for the Indemnified Party; provided the Company is not entitled to settle any such claim without the consent of that Indemnified Party.

(d) Notwithstanding anything herein to the contrary, the Company is not required to indemnify any Indemnified Party against or reimburse the County for costs arising from any claim or liability (i) occasioned by the acts of that Indemnified Party, which are unrelated to the execution of this Agreement, performance of the County's obligations under this Agreement, or the administration of its duties under this Agreement, or otherwise by virtue of the County having entered into this Agreement; or (ii) resulting from that Indemnified Party's own negligence, bad faith, fraud, deceit, or willful misconduct.

(e) An Indemnified Party may not avail itself of the indemnification or reimbursement of costs provided in this Section unless it provides the Company with prompt notice, reasonable under the circumstances, of the existence or threat of any claim or liability, including, without limitation, copies of any citations, orders, fines, charges, remediation requests, or other claims or threats of claims, in order to afford the Company notice, reasonable under the circumstances, within which to defend or otherwise respond to a claim.

Section 4.7. ***Notices.*** All notices, certificates, requests, or other communications under this Agreement are sufficiently given and are deemed given, unless otherwise required by this Agreement, when (i) delivered and confirmed by United States first-class, registered mail, postage prepaid or (ii) sent by facsimile, and addressed as follows:

if to the County:	Richland County, South Carolina Attn: Director of Economic Development 2020 Hampton Street Columbia, South Carolina 29204 Phone: 803.576.2043 Fax: 803.576.2137
with a copy to (does not constitute notice):	Parker Poe Adams & Bernstein LLP Attn: Ray E. Jones 1221 Main Street, Suite 1100 (29201) Post Office Box 1509 Columbia, South Carolina 29202 Phone: 803.255.8000 Fax: 803.255.8017

if to the Company:	Ballpark, LLC _____ _____ Phone: _____ Fax:_____
with a copy to	Burnet R. Maybank III, Esq. Nexsen Pruet, LLC 1230 Main Street, Suite 700 (29201) Post Office Box 2426 Columbia, South Carolina (29202) Phone: 803.771.8900 Fax: 803.253.8277

The County and the Company may, by notice given under this Section, designate any further or different addresses to which subsequent notices, certificates, requests or other communications shall be sent.

Section 4.8. ***Administrative Fees.*** The Company will reimburse, or cause reimbursement to, the County for the Administration Expenses in the amount of $5,000. The Company will reimburse the County for its Administration Expenses on receipt of a written request from the County or at the County's direction, which request shall include a statement of the amount and nature of the Administration Expense. The Company shall pay the Administration Expenses as set forth in the written request no later than 60 days following receipt of the written request from the County. For purposes of this Section, "Administration Expenses" means the reasonable expenses incurred by the County in the negotiation, approval and implementation of the terms and provisions of this Agreement, including reasonable attorneys' fees. Administration Expenses do not include any costs, expenses, including attorneys' fees, incurred by the County (i) in defending challenges to the Fee Payments or Public Infrastructure Credits brought by third parties or the Company or its affiliates and related entities, or (ii) in connection with matters arising at the request of the Company outside of the immediate scope of this Agreement, including amendments to the terms of this Agreement. The payment by the Company of the County's Administration Expenses shall not be construed as prohibiting the County from engaging, at its discretion, the counsel of the County's choice.

Section 4.9. ***Entire Agreement.*** This Agreement expresses the entire understanding and all agreements of the Parties with each other, and neither Party is bound by any agreement or any representation to the other Party which is not expressly set forth in this Agreement or in certificates delivered in connection with the execution and delivery of this Agreement.

Section 4.10 ***Agreement to Sign Other Documents.*** From time to time, and at the expense of the Company, to the extent any expense is incurred, the County agrees to execute and deliver to the Company such additional instruments as the Company may reasonably request and as are authorized by law and reasonably within the purposes and scope of the Act and this Agreement to effectuate the purposes of this Agreement.

Section 4.11. ***Agreement's Construction.*** Each Party and its counsel have reviewed this Agreement and any rule of construction to the effect that ambiguities are to be resolved against a drafting party does not apply in the interpretation of this Agreement or any amendments or exhibits to this Agreement.

Section 4.12. ***Applicable Law.*** South Carolina law, exclusive of its conflicts of law provisions that would refer the governance of this Agreement to the laws of another jurisdiction, governs this Agreement and all documents executed in connection with this Agreement.

Section 4.13. ***Counterparts.*** This Agreement may be executed in any number of counterparts, and all of the counterparts together constitute one and the same instrument.

Section 4.14. ***Amendments.*** This Agreement may be amended only by written agreement of the Parties.

Section 4.15. ***Waiver.*** Either Party may waive compliance by the other Party with any term or condition of this Agreement but the waiver is valid only if it is in a writing signed by the waiving Party.

Section 4.16. ***Termination.*** Unless first terminated under any other provision of this Agreement, this Agreement terminates on the expiration of the Credit Term and payment by the Company of any outstanding Net Fee Payment due on the Project pursuant to the terms of this Agreement.

Section 4.17. ***Business Day.*** If any action, payment, or notice is, by the terms of this Agreement, required to be taken, made, or given on any Saturday, Sunday, or legal holiday in the jurisdiction in which the Party obligated to act is situated, such action, payment, or notice may be taken, made, or given on the following business day with the same effect as if taken, made or given as required under this Agreement, and no interest will accrue in the interim.

[TWO SIGNATURE PAGES FOLLOW]
[REMAINDER OF PAGE INTENTIONALLY BLANK]

IN WITNESS WHEREOF, Richland County, South Carolina, has caused this Agreement to be executed by the appropriate officials of the County and its corporate seal to be affixed and attested, effective the day and year first above written.

RICHLAND COUNTY, SOUTH CAROLINA

_____
Chair, Richland County Council

(SEAL)
ATTEST:

_____
Clerk to Council, Richland County Council

[SIGNATURE PAGE 1 TO PUBLIC INFRASTRUCTURE CREDIT AGREEMENT]

IN WITNESS WHEREOF, BALLPARK, LLC has caused this Agreement to be executed by its authorized officer(s), effective the day and year first above written.

BALLPARK, LLC

By:_____

Name:_____

Its:_____

[SIGNATURE PAGE 2 TO PUBLIC INFRASTRUCTURE CREDIT AGREEMENT]

EXHIBIT A

LAND DESCRIPTION

"The Ballpark"

All those certain pieces, parcels or tracts of land situate, lying and being in the City of Columbia, County of Richland, State of South Carolina, and being more particularly shown and delineated on an ALTA/NSPS Land Title Survey prepared by Survey Matters, LLC dated November 21, 2018 as Project No. 18-167 and a plat prepared by Cox and Dinkins, Inc. dated June 4, 2019 as Project No. 9F79C-58.dwg, and according to such plats having the following measurements:

BEGINNING at an IPF located at the Northwest intersection of S. Assembly Street and Ferguson Street, said point being known as the POINT OF BEGINNING, thence proceeding S33°33'46"W for a distance of 259.08' to an IPINF; thence proceeding S33°59'43"W for a distance of 50.12' to an IPF; thence, proceeding N56°02'02"W for a distance of 124.66' to an IPF; thence, proceeding S33°12'17"W for a distance of 89.47' to an IPF; thence, proceeding S35°20'14"W for a distance of 148.32' to an IPINF; thence proceeding S35°01'13"W for a distance of 39.64'; thence proceeding S33°03'47"W for a distance of 11.49'; thence proceeding S35°05'09"W for a distance of 50.30'; thence proceeding S34°36'07"W for a distance of 50.00'; thence proceeding N55°49'02"W for a distance of 2.98' to an IPINF; thence proceeding S33°39'15"W for a distance of 166.06' to an IPINF; thence turning and proceeding N56°00'42"W for a distance of 357.27' to an IPF; thence proceeding N54°46'51W for a distance of 62.55' to an IPINF; thence turning and proceeding N34°04'49"E for a distance of 465.14; thence turning and proceeding N70°34'54"W for a distance of 63.37'; thence N52°57'06"W for a distance of 105.00'; thence proceeding N50°37'06"W for a distance of 132.54'; thence turning and proceeding N83°16'06"W for a distance of 88.24'; thence turning and proceeding N33°52'19"E for a distance of 300.12'; thence proceeding N30°02'39"E for a distance of 240.80' to an IPINS located at Dreyfus Road; thence turning and proceeding along Dreyfus Road N88°32'39"E for a distance of 35.47' to an IPINS; thence proceeding along Dreyfus Road in a curved line along a chord bearing S79°47'17"E for a chord distance of 114.59' and an arc distance of 114.79'; thence proceeding S85°40'24"E for a distance of 190.78' to NAILS located at the intersection of Dreyfus Road and S. Assembly Street; thence turning and proceeding along Assembly Street in a curved line along a chord bearing S51°40'37"E for a chord distance of 127.17' and an arc distance of 127.52'; thence proceeding S59°01'48"E for a distance of 150.54'; thence S59°01'48"E for a distance of 50.00'; thence S59°01'48"E for a distance of 289.52' to the POINT OF BEGINNING.

EXHIBIT B (See Section 2.2)
DESCRIPTION OF PUBLIC INFRASTRUCTURE

The project will have both onsite and offsite infrastructure improvements. Onsite, the project will address the earthwork necessary on the site, the Rocky Branch channel improvements, and the water/sewer infrastructure. Offsite, the project will extensively mitigate flooding by excavating the channel, removing the trestle, and installing box culverts with a 72" reinforced concrete pipe. In addition, the project will make resurfacing improvements to Assembly Street that will include a new traffic signal and bus stop. Here is a summarized forecasted budget of the public improvements associated with the project.

Preliminary Budget -- Ballpark Mixed-Use Development
Rocky Branch Flood Mitigation & Olympia Park Stream Restoration

Engineering, Design & Permitting		
Olympia Park Stream Restoration (EPC: Environ. Permitting Consultants)		621,315
Rocky Branch Flooding (PACE Engineering)		165,000
Box Culverts & DOT Olympia Ave. (Genesis Consulting)		15,000
Geo technical & Environmental testing (Vulcan soils)		17,900
Permits		15,000
Surveying		15,000
Total Engineering, Design & Permitting		**849,215**
Land, Legal & Insurance		
CSX Land Purchase		159,000
Other Land Purchase or Easement		35,000
Legal		25,000
Insurance & Performance Bond		66,809
Total Land, Legal & Insurance		**285,809**
Excavate Channel, Remove Trestle, Install 72" RCP and Box Culverts		**3,490,000**
Environmental Contingency (Soil Contamination)		**200,000**
Contingency (% of overall budget)		253,949
Total Flood Mitigation & Park / Stream Restoration Cost		**5,078,972**

Preliminary Budget -- Ballpark Mixed-Use Development
Public Improvements (DOT: Assembly & Ferguson; RB Connect Multi-Modal Paths, Greenway)

DOT Road Improvements		
DOT Road Improvements - *Assembly Street (Mill, Pave, Re-mark)*		642,000
DOT Road Improvements - *Ferguson Street*		325,000
Total DOT Road Improvements		**967,000**
Rocky Branch Channel Improvements		
Channel Connection: Rocky Branch Clean & Flow Improve Allowance		135,000
Channel Improvement (Amenity: Rock Structures & Bridges from Assembly)		185,000
Total Rocky Branch Channel Improvements		**320,000**
Multi-Modal Paths Around Site and Up Assembly to Younion		
Multi-Modal Path (Surrounding Site) Allowance: Assembly, Ferguson, Dreyfus		235,000
Multi-Modal Path OFF-Site Allowance: Dreyfus to Church (Site to Aspyre/Younion)		85,000
Rocky Branch Crossing on Assembly To Aspyre (Bridge & Box Culverts) - Allowance		190,000
Total Multi-Modal Paths Around Site and Up Assembly to Younion		**510,000**
Traffic Signal & Bus Stop/Shelter		
Traffic Signal: Ferguson/Assembly		130,000
Comet Bus & USC Shuttle Stop/Shelter		10,000
Total Traffic Signal & Bus Stop/Shelter		**140,000**
Professional Services Allocation (Legal & Civil Engineering)		
Legal Allocation	*10%*	20,000
Civil Engineering Allocation	*10%*	30,000
Total Professional Services Allocation (Legal & Civil Engineering)		**50,000**
Additional Public Improvements & Contributions		
Greenway Contribution		250,000
Historic Columbia Contribution		60,000
Security		Not Included
Total Public Improvements & Contributions		**310,000**
Total Other Public Improvements (Partial List)		**2,297,000**
Total Flood Mitgation, Stream Restoration, Road, Paths, Greenway & "Other"		**7,375,972**

EXHIBIT C (See Section 2.3)

DESCRIPTION OF PUBLIC INFRASTRUCTURE CREDIT

The County shall provide a 50% Credit against the Fee Payments due and owing from the Company to the County in connection with the Project as provided in the Credit Agreement, provided, the total amount of the credits shall not exceed the Company's Public Infrastructure costs,

The Company is eligible to receive a Credit for a period of 10 consecutive years, beginning with the first full year for which the Company owes a Fee Payment in connection with the Project following the receipt by the Company of a Certificate of Occupancy for the Project ("Credit Term").

EXHIBIT D (See Section 2.5)
RICHLAND COUNTY RESOLUTION REQUIRING CERTAIN ACCOUNTABILITY PRACTICES CONCERNING ECONOMIC DEVELOPMENT PROJECTS IN THE COUNTY

A RESOLUTION TO AMEND THE DECEMBER 21, 2010, RESOLUTION REQUIRING CERTAIN ACCOUNTABILITY PRACTICES CONCERNING ECONOMIC DEVELOPMENT PROJECTS IN RICHLAND COUNTY

WHEREAS, Richland County Council adopted a resolution dated as of December 21, 2010 ("Prior Resolution"), which requires companies receiving economic development incentives from Richland County, South Carolina ("County") to submit annual reports to the Richland County Economic Development Office; and

WHEREAS, the County desires to make the form of the annual reports submitted by such companies uniform in order to make the substantive information contained in the annual reports more easily tracked and documented by the Richland County Economic Development Office.

NOW, THEREFORE, BE IT RESOLVED by Richland County Council as follows:

Section 1. The County affirms that each company awarded an incentive by the County in exchange for the location or expansion of a facility or facilities within the County shall submit an annual report to the Richland County Economic Development Office by January 31 of each year throughout the term of the incentives.

Section 2. The Richland County Economic Development Office is authorized to create (and from time to time, if necessary, amend or recreate) and make available the form of the annual report; however, such form, shall require, at a minimum, the following information:

a. Name of company;
b. Cumulative capital investment (less any removed investment) to date as a result of the project;
c. Net jobs created to date as a result of the project;

Section 3. A copy of the then-current form of the annual report may be obtained from the following address. The annual report shall likewise be submitted to the following address by the required date.

Richland County Economic Development Office
Attention: Kim Mann
1201 Main Street, Suite 910
Columbia, SC 29201

Section 4. This Resolution amends the Prior Resolution and sets forth the County's requirements with respect to the annual reports to be submitted by each company awarded an incentive by the County as described in Section 1.

Section 5. The substance of this Resolution shall be incorporated into the agreement between the County and each company with respect to the incentives granted by the County to the company.

Section 6. In the event that any company shall fail to submit an annual report, or any portion thereof, such company may be required to return all incentives, or a dollar amount equal thereof, to the County. Such incentives, or the dollar amount equal thereto, shall be paid to the County within 60 days after the date upon which the information was originally due.

RESOLVED: December 12 2017

RICHLAND COUNTY, SOUTH CAROLINA

Chair, Richland County Council

(SEAL)
ATTEST:

Clerk to County Council

Commercial Development Incentive Program
Project Summary

Economic Development Committee
September 10, 2019

Applicant: Ballpark, LLC
Developer: W-REI
Project Name: Ballpark Redevelopment
Location: 301 S. Assembly Street, Columbia

Total Project Investment: $63,141,727

Project Overview

The Ballpark project consists of 17.5 acres of redevelopment, including 6 new multi-family residential buildings, 1 of which is mixed-use residential and commercial retail, and various public amenities. These amenities include an estimated $500,000 pool house and pump room, a 5,000 sf pool, a 10,000 sf pool deck, 7,800 sf leasing office and clubhouse, 20,000 sf of retail, half-court basketball, bicycle parking, 12,000 sf outdoor shared-use retail plaza, over 35,000 sf of open multi-purpose green space, over 5,000 linear feet of sidewalk connectivity through and around the site, structured pedestrian bridge connection to Assembly Street, 60,000 sf of restored streamway, signalization of the Ferguson-Assembly intersection, and restructuring traffic patterns adjacent to the site.

Building 1: 154, 400 sf (4-story)
Building 2: 130,800 sf (4-story)
Building 3: 134,800 sf (4-story)
Building 4: 24,400 sf (2-story)
Building 5: 29,000 sf (2-story)
Building 6: 29,000 sf (2-story)

Description of Public Infrastructure:

- Olympia Park Stream Restoration & Flood Mitigation Work
- Multi-modal Enhancements:
  - Assembly Street Road Improvements
  - Sidewalk connectivity

Cost of public infrastructure: $7,375,972 Total Taxable Investment: $53,038,605

% Public Infrastructure of total investment: 10.5%

Public Benefit

The project will dramatically transform 17 ½ acres of nonproductive land into a vibrant center of an urban mixed use of residential and retail. While large scale box retail was deemed to be unfeasible by other developers, the 20,000 square feet of retail will be the largest concentration of retail space walkable to residents of the Olympia and Granby communities.

This retail center will fill the needs of both new residents as well as the surrounding neighborhoods.

By completing the improvements above including flood work, increasing connectivity, and providing accessible retail, the development will fill a need in the community by providing housing aimed at the young workforce of Richland County and also retail to serve both their needs and those of the Olympia, Granby and Rosewood Communities.

According to Cushman and Wakefield's 4th Quarter 2018 Market Insight, there will be 7,300 new renter households in the Columbia area by 2023. However, there are only 1,250 new rental units planned or under construction that will be able to meet that need. Columbia's strong job growth, which increased by 6,500 new jobs from the 4th quarter of 2017 to the 4th quarter of 2018, further demonstrates the increasing demand in the Columbia market. Many of these jobs are coming to the center areas of the community. Whether this job growth is due to the development of the Pineview Industrial Park, or new firms spun out of the University of South Carolina, demand for housing near the city center is the highest in Richland County.

Property Taxes

Current Year Taxes on Property: $15,600 (all but 1 parcel is tax exempt)
Taxes after project completion (no incentive): $1,789,794 (Year 3)

Recommendation

50% SSRC for 10 years, with total incentive value to be capped at public infrastructure investment

Year	*Current Taxes	**Taxes with Project	Incentive Value	1% MCIP	Net Taxes	Net Gain
1	$15,600	$151,795	$75,897	$759	$75,138	$59,538
2	$15,756	$816,247	$408,124	$4,081	$404,042	$388,286
3	$15,914	$1,789,794	$894,897	$8,949	$885,948	$870,035
4	$16,073	$1,801,038	$900,519	$9,005	$891,514	$875,441
5	$16,233	$1,813,561	$906,780	$9,068	$897,713	$881,479
6	$16,396	$1,826,154	$913,077	$9,131	$903,946	$887,550
7	$16,560	$1,838,817	$919,409	$9,194	$910,215	$893,655
8	$16,725	$1,851,552	$925,776	$9,258	$916,518	$899,793
9	$16,893	$1,864,357	$932,178	$9,322	$922,857	$905,964
10	$17,061	$1,877,233	$489,314	$9,386	$929,230	$912,169
Totals	**$163,211**	**$15,630,548**	***$7,365,972**	**$78,153**	**$7,737,121**	**$7,573,911**

*Assumes 1% annual growth
**3 year investment window
***Incentive capped at public infrastructure investment

Project

Richland County

30 Year Standard Ad Valorem in MCIP Illustration

	Investment Window Standard Ad Valorem Payment Stream					Standard Ad			
	Yr. 1 Investment	Yr. 2 Investment	Yr. 3 Investment	Yr. 4 Investment	Yr. 5 Investment	Valorem Tax Excludes 5-Yr.	Less 50%	Less 1%	Net to
Year	$ 4,620,000	$ 19,977,203	$ 28,441,402	$ -	$ -	Abatement	SSRC	MCIP	County
1	$ 151,795	$ -	$ -	$ -	$ -	$ 151,795	$ 75,897	$ 759	$ 75,138
2	$ 153,313	$ 662,935	$ -	$ -	$ -	$ 816,247	$ 408,124	$ 4,081	$ 404,042
3	$ 154,846	$ 669,564	$ 965,385	$ -	$ -	$ 1,789,794	$ 894,897	$ 8,949	$ 885,948
4	$ 156,394	$ 676,260	$ 968,384	$ -	$ -	$ 1,801,038	$ 900,519	$ 9,005	$ 891,514
5	$ 157,958	$ 683,022	$ 972,580	$ -	$ -	$ 1,813,561	$ 906,780	$ 9,068	$ 897,713
6	$ 159,538	$ 689,852	$ 976,764	$ -	$ -	$ 1,826,154	$ 913,077	$ 9,131	$ 903,946
7	$ 161,133	$ 696,751	$ 980,933	$ -	$ -	$ 1,838,817	$ 919,409	$ 9,194	$ 910,215
8	$ 162,744	$ 703,719	$ 985,089	$ -	$ -	$ 1,851,552	$ 925,776	$ 9,258	$ 916,518
9	$ 164,372	$ 710,756	$ 989,229	$ -	$ -	$ 1,864,357	$ 932,178	$ 9,322	$ 922,857
10	$ 166,016	$ 717,863	$ 993,354	$ -	$ -	$ 1,877,233	$ 938,616	$ 9,386	$ 929,230
11	$ 167,676	$ 725,042	$ 1,002,228	$ -	$ -	$ 1,894,946	$ -	$ 18,949	$ 1,875,997
12	$ 169,353	$ 732,292	$ 1,012,251	$ -	$ -	$ 1,913,895	$ -	$ 19,139	$ 1,894,757
13	$ 171,046	$ 739,615	$ 1,022,373	$ -	$ -	$ 1,933,034	$ -	$ 19,330	$ 1,913,704
14	$ 172,757	$ 747,011	$ 1,032,597	$ -	$ -	$ 1,952,365	$ -	$ 19,524	$ 1,932,841
15	$ 174,484	$ 754,482	$ 1,042,923	$ -	$ -	$ 1,971,888	$ -	$ 19,719	$ 1,952,170
16	$ 176,229	$ 762,026	$ 1,053,352	$ -	$ -	$ 1,991,607	$ -	$ 19,916	$ 1,971,691
17	$ 177,991	$ 769,647	$ 1,063,886	$ -	$ -	$ 2,011,523	$ -	$ 20,115	$ 1,991,408
18	$ 179,771	$ 777,343	$ 1,074,524	$ -	$ -	$ 2,031,639	$ -	$ 20,316	$ 2,011,322
19	$ 181,569	$ 785,116	$ 1,085,270	$ -	$ -	$ 2,051,955	$ -	$ 20,520	$ 2,031,435
20	$ 183,385	$ 792,968	$ 1,096,122	$ -	$ -	$ 2,072,475	$ -	$ 20,725	$ 2,051,750
21	$ 185,218	$ 800,897	$ 1,107,084	$ -	$ -	$ 2,093,199	$ -	$ 20,932	$ 2,072,267
22	$ 187,071	$ 808,906	$ 1,118,154	$ -	$ -	$ 2,114,131	$ -	$ 21,141	$ 2,092,990
23	$ 188,941	$ 816,995	$ 1,129,336	$ -	$ -	$ 2,135,273	$ -	$ 21,353	$ 2,113,920
24	$ 190,831	$ 825,165	$ 1,140,629	$ -	$ -	$ 2,156,625	$ -	$ 21,566	$ 2,135,059
25	$ 192,739	$ 833,417	$ 1,152,036	$ -	$ -	$ 2,178,192	$ -	$ 21,782	$ 2,156,410
26	$ 194,666	$ 841,751	$ 1,163,556	$ -	$ -	$ 2,199,973	$ -	$ 22,000	$ 2,177,974
27	$ 196,613	$ 850,169	$ 1,175,191	$ -	$ -	$ 2,221,973	$ -	$ 22,220	$ 2,199,753
28	$ 198,579	$ 858,670	$ 1,186,943	$ -	$ -	$ 2,244,193	$ -	$ 22,442	$ 2,221,751
29	$ 200,565	$ 867,257	$ 1,198,813	$ -	$ -	$ 2,266,635	$ -	$ 22,666	$ 2,243,969
30	$ 202,571	$ 875,930	$ 1,210,801	$ -	$ -	$ 2,289,301	$ -	$ 22,893	$ 2,266,408
31	$ 204,596	$ 884,689	$ 1,222,909	$ -	$ -	$ 2,312,194	$ -	$ 23,122	$ 2,289,072
32	$ 206,642	$ 893,536	$ 1,235,138	$ -	$ -	$ 2,335,316	$ -	$ 23,353	$ 2,311,963
33	$ 208,709	$ 902,471	$ 1,247,489	$ -	$ -	$ 2,358,669	$ -	$ 23,587	$ 2,335,083
34	$ 210,796	$ 911,496	$ 1,259,964	$ -	$ -	$ 2,382,256	$ -	$ 23,823	$ 2,358,433
Totals	$ 6,110,906	$ 25,767,614	$ 34,865,287	$ -	$ -	$ 66,743,807	$ 7,815,274	$ 589,285	$ 58,339,248
NPV	$ 3,807,686	$ 15,826,208	$ 21,151,280	$ -	$ -	$ 40,785,174	$ 6,592,851	$ 341,923	$ 33,850,400

Investment Schedule:

Land & Building	$ 52,065,857
M&E	$ 972,748
Total Investment	$ 53,038,605

Assumptions:

Tax District	1CC
Millage Rate	0.5476
Abatable Millage	0.0971
Net Total Millage	0.4505
LOST Credit Factor	N/A
Annual Depreciation	11%
Max Depreciation	90%
Annual Millage Growth	1%
Discount Rate	3%
MCIP Split	1%

MCIP Assessment Ratios

Real Property	6.0%

Standard Assessment Ratios

Real Property	6.00%
Personal Property	9% - 9.75%

SSRC

Percentage	50%

DATE:

DISCLAIMER:

RICHLAND COUNTY Economic Development

Copyright © 2016 Parker Poe Consulting, LLC. All Rights Reserved.

Commercial Development Program

Application for Property Tax Incentives

Applicant Information

Applicant: Ballpark, LLC
Type: LLC
Address: 105 MacGregor Drive
Website: www.w-rei.com
City: Stamford State: CT Zip: 06902

Project Contact Information:
Name: Andrew Weddle (Manager, Ballpark, LLC)
E-mail: aweddle@w-rei.com
Address: 105 MacGregor Drive
Phone: (415) 987-4585
City: Stamford State: CT Zip: 06902

Attach the following information related to the company that is applying for this incentive:

1. Historical information and a description of experience with similar projects.
2. Confirmation that the company has the financial wherewithal to complete the project.

Project Description

Property Address: 301 S. Assembly Street
TMS#: 11204-02-02;11204-02-42; 11204-02-06; 11204-0207
City: Columbia State: SC Zip: 29201
Current Taxable Value: $ 2,227,300.00

Is the property owned or controlled by the applicant? ☐ Owned ☑ Controlled ☐ Neither
If controlled, please describe method of control, timeframe and any conditional terms. If neither, please describe the plan to acquire or control the property.

Applicant is under contract with three property owners and will close/purchase parcels by May 1, 2020 or earlier.

The purchase/closing, to mitigate flooding and develop a mixed-use property, is contingent on receiving 50% tax credits (SSRC).

* Taxable Value: Total $2,227,300; Tax Exempt $2,211,700; Taxable $15,600

Is the property currently zoned for the intended project use? ☐ Yes ☑ No

Attach the following information related to the project:

1. A physical description of the project to include total acreage being developed/redeveloped, proposed building sizes, types and uses and proposed public infrastructure improvements. The narrative should also discuss the project's impact on the local community. Elaborate on how this project is addressing a need in the community, will be a catalyst for growth, is consistent with comprehensive planning, etc.
2. Electronic versions of maps, renderings, and presentations related to the project.
3. Timing
   a. When will the decision be made to proceed or abandon the project?
   b. What are the decision factors in proceeding or not?
   c. What is the anticipated construction start and completion for the project?
   d. What is the anticipated construction start and completion for public infrastructure improvements?
4. If structured parking is part of the project, please provide the pro forma on the parking plan and outline if there is an opportunity for parking to be made available to uses outside of the project

needs (such as hourly, daily, monthly parking leases or event parking during daytime or evening hours).

5. If the target market of the development is student oriented, describe a process by which units will be made available to individuals of a lower income level than typically required and how that process/commitment will be managed.

For projects with a residential component, what percentage of the units will be utilized to support workforce housing, and how will that commitment be managed?

The Ballpark is a mixed-use community composed of 310 market-rate (1bdrm, 2bdrm & 3bdrm units -- no 4bdrm units) apartments and 20,00sf of retail.

The Ballpark will be home to a variety of residents including professors, young professionals, public servants, recent graduates (couples) and students.

Capital Investment

Projected Capital investment over the next five years, broken out by year and by investment type:

Investment	Year 1	Year 2	Year 3	Year 4	Year 5
Land Acquisition	$ 4,620,000.00				
New Construction	$ 2,497,150.00	$ 19,977,203.00	$ 27,468,654.00		
Existing Acquisition/Modifications					
FF&E			$ 972,748.00		
Public Infrastructure	$ 5,578,972.00	$ 993,500.00	$ 993,500.00		
Other Investments	$ 40,000.00				
Total Capital Investment	$ 12,736,122.00	$ 20,970,703.00	$ 29,434,902.00	$ 0.00	$ 0.00
Taxable Value	$ 4,620,000.00	$ 4,620,000.00	$ 57,227,755.00		

Job Creation

How many full-time jobs will be created as a result of this project? 35 Part-time? 40

Project Funding

How will this project be funded? If there are multiple funding sources, please provide a sources and uses table. Include any public funds that have been or may be received.

Has project funding been approved? ☐ Yes ☑ No

If not, please describe the process required and estimated timeframe.

Once the applicant receives entitlements (including the County/City approving the SSRC) and approval from FEMA and the Corp. of Engineers, debt and equity will be secured within 120 days.

Applicant has an extensive development history in the Olympia neighbor and is negotiating financing with both local and national capital partners.

Have any other incentives been applied for or approved for the project outside of the Commercial Development Program? If yes, please describe.

Applicant will apply for Abandon Building (AB) credits to help (partially) defray the significant on-site (cure) costs.

- import dirt/fill; remediate contaminated, organic/alluvial soils; relocate water, sewer, electric and re-route stream.

Project Impact

In addition to property tax, describe other taxes that will be paid by the development:

Applicable Tax	Estimated Annual Amount
Hospitality Tax	$ 78,000.00
Accommodations Tax	
Admissions Tax	
Sales Tax	$ 378,000.00
Business License Fee	$ 16,089.00
Other:	

Describe any other revenue that will be generated by the project that will benefit the local community:

The Ballpark development will be home to approximately 700 residents and will attract hundreds of shoppers and diners daily.

The Ballpark will generate substantial water and sewer fees and will stimulate additional development (and taxes) along Assembly Street.

With the Base Flood Elevation (BFE) being lowered by approx. 4ft., Richland County residents, living in Olympia, should see property values increase.

Flooding will be reduced at Richland County's Olympia Park so park-goers can more fully enjoy the park throughout the year.

Jeff Ruble
Director
Economic Development
1201 Main Street, Suite 910
Columbia, SC 29201

Dear Mr. Ruble,

Thank you for the opportunity to present The Ballpark development to the Economic Development Committee of the Richland County Council. We have included (via email and in our drop box) our completed application for property tax incentives as well as the project description (narrative) and exhibits (Project Budget, Public Improvement Budget, Sources & Uses, Plans etc.).

In early August, the Planning Commission approved our annexation and rezoning request and, on September 10th, we will present our site plan to the Commission and the Board of Zoning Appeals. You will notice (in the exhibits) we are revising our site plan to incorporate valuable urban design suggestions from the City's planning staff. We will send to you our updated plan next week. In the meantime, we have included a draft of the revised plan.

The Ballpark development offers many benefits for Richland County citizens and to the neighborhoods surrounding the Old Bombers Stadium site. This development will fill a need in the community by providing 310 market-rate apartment units and retail to serve both residents needs and those of the Olympia, Granby, and Rosewood Communities. The Ballpark will provide recent graduates with an attractive, affordable place to live and can thereby help to retain our local talent. It helps to spread the cost of infrastructure like schools cost over more households. The 20,000 square feet of retail will be the largest concentration of retail space walkable to residents of the Olympia and Granby communities.

Moreover, the improvements (described below) will prevent Richland County's Olympia Park from flooding, increased public safety, and with the future greenway connection, make it more usable for residents.

The Ballpark also will dramatically increase the tax base on this property since two of the property owners, the City of Columbia and Dominion, appear to be tax-exempt entities.

Rocky Branch Creek Flooding (Olympia Park) and Stream Restoration:

1. A proposed culvert replacement at Olympia Ave. will lower the flood elevations to contain the 100-year storm event within the banks, significantly increasing velocity and bank stress on this portion of the Rocky Branch. The goals of the proposed stream restoration actions are to reduce bank erosion by preventing the formation of head cuts in areas of a steep slope, reducing sheer stress and increasing riparian vegetation an improving stream habitat.
2. The proposed work will not only reduce the 100-year flood elevation but also the 2, 10, 25, and 50-year flood elevations as well. The BSE base flood elevation will be lowered by roughly 4f feet preventing flooding of Okhympia Park amonth other benefits.

3. The flood mitigation and Olympia Park stream restoration work will affect nearly 2,500 linear feet of Rocky Branch from the project site to the Vulcan Mine.
4. The corridor of Assembly Street between Whaley Street and Rosewood Drive will be resurfaced and repainted. Lanes will be reconfigured to better suit the needs of the traffic along Assembly Street by providing new turn lanes to prepare for a new stoplight at Ferguson Street. This will allow residents of the Olympia and Granby neighborhoods safe access on and off Assembly Street.

Assembly Street Enhancements:

1. The corridor of Assembly Street between Whaley Street and Rosewood Drive will be resurfaced and repainted. Lanes will be reconfigured to better suit the needs of the traffic along Assembly Street by providing new turn lanes to prepare for a new stoplight at Ferguson Street. This will allow residents of the Olympia and Granby neighborhoods safe access on and off of Assembly Street.

2. Offsite Sidewalk Connectivity: The Assembly offsite walk sketch model shows how sidewalks could be constructed from Ferguson Street up to existing sidewalks at Whaley and Assembly Street. To accomplish this connection to Ferguson Street, culverts containing the Rocky Branch creek that travels under Assembly Street must be extended to allow the sidewalk construction. Easements must be acquired, and approval granted by the Department of Transportation.

Other Project Benefits:

1. **Greenway to Olympia Park** – The City has the right to require Ballpark LLC to match the City's funding up to **$250,000** of the cost of the Greenway to Olympia Park.
2. Fund **$60,000 to Historic Columbia** for a documentary of Capital City Stadium and a "last tour" event to take place before demolition of the structure.
3. There will be a Bus Stop at the property on by a proposed traffic light at Assembly and Ferguson.
4. Ballpark LLC defrays the cost for the stadium security until demolition.

We look forward to delivering these benefits to Richland County and to its citizens.

Regards,

Andrew Weddle
Ballpark LLC

The Ballpark

August 29, 2019

Physical Description of the Project

The Ballpark project consists of 17.5 acres of redevelopment, including 6 new multi-family residential buildings, 1 of which is mixed-use residential and commercial retail, and various public amenities. These amenities include an estimated $500,000 pool house and pump room, a 5,000 sf pool, a 10,000 sf pool deck, 7,800 sf leasing office and clubhouse, 20,000 sf of retail, half court basketball, bicycle parking, 12,000 sf outdoor shared-use retail plaza, over 35,000 sf of open multi-purpose green space, over 5,000 linear feet of sidewalk connectivity through and around the site, structured pedestrian bridge connection to Assembly Street, 60,000 sf of restored streamway, signalization of the Ferguson-Assembly intersection, and restructuring traffic patterns adjacent to the site.

The site lies on the west side of and fronts on Assembly Street to which there is a primary pedestrian connection. Required as part of this development are extensive right-of-way improvements to Assembly Street, Ferguson Street and Dreyfus Road, the majority of which centers around signalizing the intersection at Ferguson and subsequent resurfacing and restriping of Assembly Street from Rosewood Avenue to Whaley Street. As part of these offsite improvements, and in part to serve the traffic expected from this site, a multimodal pedestrian path is proposed for the frontage of the site that is intended to serve walking and bicycle traffic. A portion of this pathway is intended to continue past this site along the west side of Assembly Street to connect to neighboring residential and retail developments as well as the University of South Carolina. This pathway involves a railroad crossing and a dedicated pedestrian bridge spanning Rocky Branch. Additionally, the multimodal pathway proposed in front of the development is meant to act as an extension of and traffic generator for a proposed greenway trail along Rocky Branch which is funded jointly by the developer and the City of Columbia and which will serve the neighboring residential communities. Finally, the developer has committed to working with The Comet and the University of South Carolina shuttle service to introduce a new stop at this site for their respective routes.

Building 1: 154, 400 sf (4-story)
Building 2: 130,800 sf (4-story)
Building 3: 134,800 sf (4-story)
Building 4: 24,400 sf (2-story)
Building 5: 29,000 sf (2-story)
Building 6: 29,000 sf (2-story)

(See site plans and most recent renderings in Exhibits)

Proposed Public Infrastructure Improvement

Olympia Park Stream Restoration & Flood Mitigation Work

EPC INVOLVEMENT – Restoration of Olympia Park & Wetlands Mitigation

Environmental Permitting Consultants, Inc. (EPC) was contracted by the Kroger Company to prepare a Section 404/401 permit application for the relocation of a tributary of Rocky Branch located on the baseball field site. This relocation was related to a primarily commercial development project proposed for this site.

As part of the permit application, EPC was also tasked to prepare a compensatory mitigation plan to offset impacts associated with the development. As work was needed in Rocky Branch in order to meet certain FEMA requirements, EPC recommended that an Applicant Responsible Mitigation Plan (ARMP) be developed that allowed stream restoration credits to be obtained from the work proposed in Rocky Branch at Olympia Park. This stream restoration work would also help in lowering the flood levels at the development site per the FEMA requirements.

The stream restoration credits derived from the work in Olympia Park were enough to offset the stream credits required by about 50%. The additional credits were proposed to be made up by preserving a stream and riparian buffer area associated with Griffins Creek in the same drainage as the development site.

After Kroger decided not to develop the South Assembly Street site, W-REI took over the project. In January 2019, W-REI contacted EPC to revise the Section 404/401 permit application and mitigation plans. The permit needed to be revised due to the change in use going from mostly commercial to mostly residential. EPC is in the process of preparing the revised application and ARMP for the Corps review.

Stream Restoration Associated with this project will:

- Improve/enhance 947 linear feet of Rocky Branch within Olympia Park
- Increase instream and riparian habitat diversity by installing structures and planting banks with native species
- Provide more opportunity to connect park visitors with the stream and riparian areas by creating rock outcroppings.
- The relocated stream channel will provide ecological uplift by connecting the water column with sediment bed materials allowing for populations of benthic macroinvertebrates to flourish (the current channel has a concrete bottom).
- This area is slightly downstream of the project area and begins at the outfall of the RR grade, flows for approximately 947 linear feet through Olympia Park to the culvert that runs under Olympia Ave. This reach has down cut and is widening as shown in the enclosed pictures A proposed culvert replacement at Olympia Ave. will lower the flood elevations to contain the 100-year storm event within the banks, significantly increasing

velocity and bank stress on this portion of the Rocky Branch. The goals of the proposed stream restoration actions are to reduce bank erosion by preventing the formation of head cuts in areas of the steep slope, reducing sheer stress and increasing riparian vegetation an improving stream habitat.

Activities along Rocky Branch, in association with the commercial development, include the:

1. Addition of a 72" culvert at the RR grade immediately upstream of Olympia Park

2. Replacement of the existing Olympia Ave. culvert with a 40' culvert (estimated) to alleviate backwater conditions along Rocky Branch

3. Removal of accumulated sediments within Rocky Branch downstream of Olympia Ave.

4. Removal of an abandoned RR trestle and retaining wall downstream of Olympia Ave. generally behind Granby Mill

The flood mitigation and Olympia Park stream restoration work will affect nearly 2,500 linear feet of Rocky Branch from the project site to the Vulcan Mine. In May 2016, the City of Columbia made available the Rocky Branch Watershed assessment. The plan identified increasing flow capacity at the RR grade, replacement of the Olympia Ave. culvert, and removal of abandoned RR trestle and retaining wall as priorities for the sub-watersheds encompassing the projects area and the Vulcan site.

The proposed work will reduce not only the 100-year flood elevation but also the 2, 10, 25, and 50-year flood elevation. The BSE base flood elevation will be lowered by roughly 4ft. upstream of Bluff Road and by a lesser amount along the segment, except the area next to Vulcan.

(See Preliminary Flood Budget)

Multi-Modal Enhancements:

Assembly Street Road Improvements:

The corridor of Assembly Street between Whaley Street and Rosewood Drive will be resurfaced and repainted. Lanes will be reconfigured to better suit the needs of the traffic along Assembly Street by providing new turn lanes to prepare for a new stoplight at Ferguson Street. This reconfiguration will allow residents of the Olympia and Granby neighborhoods safe access on and off of Assembly Street.

(See Assembly Street Resurfacing Concept)

Sidewalk Connectivity:

The Assembly offsite walk sketch model shows how sidewalks could be constructed from Ferguson Street up to existing sidewalks at Whaley and Assembly Street. In order to accomplish this, the culverts containing the Rocky Branch creek that travels under Assembly Street must be extended to allow the sidewalk construction. Easements must be acquired and approval granted by the Department of Transportation.

(See Assembly offsite walk sketch model)

Sidewalks will further be extended in front of the Ballpark Development providing a multi-modal path built to accommodate both pedestrians and cyclists. Landscaping will be provided including grass and trees to create a linear park complete with the daylighting of an unobstructed tributary to the Rocky Branch.

Addressing Needs of the Community

The project will dramatically transform 17 ½ acres of nonproductive land into a vibrant center of an urban mixed use of residential and retail. While large scale box retail was deemed to be unfeasible by other developers, the 20,000 square feet of retail will be the largest concentration of retail space walkable to residents of the Olympia and Granby communities. This retail center will fill the needs of both new residents as well as the surrounding neighborhoods.

By completing the improvements above including flood work, increasing connectivity, and providing accessible retail, the development will fill a need in the community by providing housing aimed at the young workforce of Richland County and also retail to serve both their needs and those of the Olympia, Granby and Rosewood Communities.

According to Cushman and Wakefield's 4th Quarter 2018 Market Insight, there will be 7,300 new renter households in the Columbia area by 2023. However, there are only 1,250 new rental units planned or under construction that will be able to meet that need. Columbia's strong job growth, which increased by 6,500 new jobs from the 4th quarter of 2017 to the 4th quarter of 2018, further demonstrates the increasing demand in the Columbia market. Many of these jobs are coming to the center areas of the community. Whether this job growth is due to the development of the Pineview Industrial Park, or new firms spun out of the University of South Carolina, demand for housing near the city center is the highest in Richland County.

Catalyst for Growth

The multimodal pathway proposed in front of the development is meant to act as an extension of and traffic generator for a proposed greenway trail along Rocky Branch which is funded jointly by the Developer, City of Columbia, and Richland County, and will serve the neighboring residential communities. Further, the developer has committed to work with the Comet and the University of South Carolina shuttle service to introduce a news stop at this site for their respective routes.

Consistent with the Comprehensive Plan

The Ballpark Project has many consistencies with the Comprehensive Plan. The Land Use Element goals include urban and suburban infill projects, moderate to high density mixed used developments and are consistent with the project. The project is a mixed-use development with pedestrian, bicycle, and public transit linkages which are a goals of the Transportation Element. We are consistent with the Collaboration and Parks Element with the flood work that impacts Olympia Park. The public benefit of the stream restoration and flood abatement are consistent with the Natural Resource Element as is our contribution to the Greenway in the purchase contract. Our project is consistent with aspects of the Housing Element such as living and working in the same area. The project has consistency with important goals of the Population Element with residential infill.

Experience and Financial Wherewithal

See company information included at the end of this narrative

Andrew Weddle and members of the WREI team have partnered with high-net individuals, family offices and national real estate funds to develop more than 820 best-in-class apartment homes (similar to the proposed Ballpark apartments) and several notable first-class office buildings. Weddle has been a visionary and partner with PMC (Philadelphia Management), Dave Douglas (Douglas Development, Aynor, SC), CA Ventures (Chicago) and other regional developers to build apartments valued at $175,000,000 and office buildings valued at $100,000,000.

Below is a partial list of WREI-sponsored developments:
Olympia & Granby Mills, 346 units; Columbia, SC (Partner)
Kerr Station Lofts, 150 units; Wilmington, NC (Partner) - similar design to that of the Ballpark
Progress 910, 168 units; Wilmington, NC (Partner)
Progress 405, 156 units; Stillwater, OK (Partner)
TD Operations Center, 100,000sf; Lexington, SC (Partner)
TD Bank Building, 148,000sf; Columbia, SC (Partner)

Improvements and schedule

If we are granted the approvals necessary to move forward in an ideal timeline, we anticipate that we will purchase all of the required property by the Spring of 2020. These approvals must include approval by Richland County, the City of Columbia for tax abatement, zoning, and design concept as well as FEMA and the Corps of Engineers. Each of these approvals is required for the project to proceed - easements, flood waivers, base flood elevation increase, jurisdicational agreement (county to oversee channel excavation behind Olympia Mill - in the limits). We will immediately begin work on both the flood abatement work and other public improvements during the Summer of 2020 and expect to complete the flood mitigation work in the Spring of 2021. We expect that to start the project's site work and vertical construction in the Winter of 2020 and be ready for occupancy by the Spring of 2022.

WEDDLE

REAL ESTATE INVESTMENTS

ABOUT US

At Weddle Real Estate Investments, we spearhead commercial real estate projects to improve communities and reward investors with strong returns. Our financial savvy, rigorous approach, and wealth of experience allow us to consistently deliver. We focus on developing high-quality multifamily and student housing properties in growing cities, helping your investment and the communities in which we work to reach their full potential.

LEADERSHIP

EMAIL
aweddle@w-rei.com

PHONE
(415) 987.4585

Andrew Weddle // Principal/Managing Director

Andrew Weddle has strong ties to Columbia, South Carolina and is excited to work on another project in the growing city. He completed undergraduate studies at the University of South Carolina, graduating with honors, and began his career with Columbia based Edens & Avant.

After earning an M.B.A. in real estate finance from the Wharton School at the University of Pennsylvania, Andrew led a team of mortgage acquisition specialists in the Palm Beach, Florida office of Ocwen Financial. He later served as the managing director and was a partner of Diversified Development, Inc. (DDI), a Columbia based developer of office and industrial properties in North and South Carolina. At DDI, he acquired a distressed, mostly vacant office park (Westpark Office Park) and formulated a strategy to generate significant development demand to revitalize the park.

Later, Andrew was instrumental in the redevelopment of the historic Olympia Mill Village, in downtown Columbia, SC. As managing member of Olympia Partners, he purchased 100% ownership of the Mills and implemented his adaptive reuse vision of the 100-year-old Granby and Olympia mills into loft apartments valued at $80 million.

Andrew is a partner in Progress Student Living, a company founded by Dave Douglas (Douglas Development of Aynor, SC), a well-respected and prolific developer of affordable housing. Weddle was also a principal of HighBridge Properties in San Francisco.

Andrew holds a South Carolina real estate license with Al Saad of A.L. Saad & Companies.

EMAIL
jcshine@w-rei.com

PHONE
(803) 315.8869

James C. “Jim” Shine // Partner/Managing Director

Jim Shine has 18 years of real estate development experience in Columbia, S.C. Like principal Andrew Weddle, he played a key role in the redevelopment of the historic Olympia Mill Village. He helped build community support for the project and secured the requisite entitlements to develop the sites.

Jim’s background includes 30 years in city, county, state, and federal government as a public administrator and criminal justice system executive. He has served as Deputy State Director for the South Carolina Department of Social Services, First Deputy Commissioner for the City of New York Department of Corrections, and First Deputy Commissioner for the City of New York Department of Probation. Jim was the first director of the American Prosecutors Research Institute. He was also Executive Assistant & Special Counsel and Acting Deputy Associate Administrator, in the Office of Juvenile Justice and Delinquency Prevention (OJJDP) of the Law Enforcement Assistance Administration (LEAA) in the US Department of Justice.

Jim holds a J.D. from the University of California, Hastings College of Law; an MPA from the John F. Kennedy School of Government at Harvard University; and a B.A. in political science from the University of California, Berkeley. He Also holds a real estate license in South Carolina.

OUR WORK

TD Bank Building // Columbia, SC

As a principal from Weddle Real Estate Investments, Andrew played a key role in this project which laid the groundwork for Columbia's Main Street revitalization. The property, once a vacant Belk department store, was redeveloped through a public private partnership with the City of Columbia. Now a core part of Columbia's Main Street district, its primary tenants are TD Bank (formerly Columbia First Bank) and the Adams Reese LP law firm.

Serving as a consultant to the developer, Foster Saad, Weddle helped evaluate the feasibility of the development, re-engineer the plans to improve the project's economics, and negotiate leases for inaugural tenants. He also helped raise investor equity and secured senior and mezzanine debt to capitalize the development.

OUR WORK

TD Bank Technology and Operations Center // Lexington, SC

As a principal from Weddle Real Estate Investments, Andrew played a key role in this project which laid the groundwork for Columbia's Main Street revitalization. The property, once a vacant Belk department store, was redeveloped through a public private partnership with the City of Columbia. Now a core part of Columbia's Main Street district, its primary tenants are TD Bank (formerly Columbia First Bank) and the Adams Reese LP law firm.

Serving as a consultant to the developer, Foster Saad, Weddle helped evaluate the feasibility of the development, re-engineer the plans to improve the project's economics, and negotiate leases for inaugural tenants. He also helped raise investor equity and secured senior and mezzanine debt to capitalize the development.

OUR WORK

Olympia and Granby Mills // Columbia, SC

This adaptive re-use project retained the historic, red-brick facades of these century old textile mills in downtown Columbia, S.C. Completed in 2005, Granby Mill is home to 146 luxury apartments. Olympia Mill, completed in 2006, houses another 200 luxury rental units. Both properties cater primarily to students of the University of South Carolina.

Andrew and Jim acquired the mills with the intent of redeveloping them for residential use, initiated and oversaw predevelopment activities, and obtained the requisite entitlements for construction. The Weddle Real Estate Investments team successfully re-routed 600 quarry trucks that roared in front of the Mills every day. Shine and Weddle worked with the Governor's office to create a fee-in-lieu solution to fund an alternate road within Vulcan Materials property and out of the Olympia neighborhood.

With help of his longtime friend and former professor, Dr. Peter Linneman, Andrew sold the Mills to principals of PMC, a pioneer in redevelopment projects across the United States. PMC's leaders shared Jim and Andrew's vision and saw the Mill project as a catalyst for transforming a long-neglected industrial area into a thriving residential neighborhood.

OUR WORK

Progress 910 // Wilmington, NC

As a partner in the Progress Student Living joint venture, Weddle Real Estate Investment's Andrew Weddle helped develop Progress 910, a 168-unit student-housing community near the University of North Carolina Wilmington. He played a lead role in acquiring the site, structuring a complex 70-year ground lease, securing entitlements, and ensuring construction was completed on time and on budget. He also, worked with local government agencies and community leaders to build support for the project.

Progress 910 consists of three four-story residential buildings located on a 16-acre site near the main entrance to the UNCW campus. It is the first off-campus student-housing community in Wilmington with four-bedroom apartment suites. Property amenities include an outdoor, resort-style pool with poolside cabanas; a 24-hour, state-of-the-art fitness center; an activity room with a fireplace, lounge areas, and billiards and ping-pong tables; and a secluded cybercafé and study lounge.

OUR WORK

Kerr Station Lofts // Wilmington, NC

On January 8, 2019, Andrew Weddle and Jim Shine delivered the final iteration of a fully entitled student housing site called Kerr Station Lofts. Sited on 9.29 acres, Kerr Station Lofts is conditionally zoned to house 5,000 square feet of commercial space, 120 multifamily dwelling units, and 31 townhomes. The site is minutes away from the campus of the University of North Carolina Wilmington and features a total of 495 beds.

Weddle Real Estate Investment's unique mix of three and four story buildings surrounded by 2-story townhomes provides residents with a variety of floor plans while increasing tenant retention and long-term occupancy.

Weddle and Shine successfully navigated many development challenges including assembling 6 separate parcels, de-tenanting a 60,000sf shopping center, managing nearby environmental contamination, developing a new city road connection for more efficient egress/ingress, and fully rezoning the property to allow for height and density increases.

Weddle Real Estate Investments tapped CA Ventures as its development partner. Construction begins in March 2019.

LOCATION MAP
(1"=2000')

REFERENCES:

1. ALTA/NSPS LAND TITLE SURVEY PREPARED FOR PROPERTY OF: CITY OF COLUMBIA, SC ELECTRIC & GAS COMPANY, BY SURVEY MATTERS, LLC., DATED NOVEMBER 21, 2018.
2. ROCKY BRANCH CLOMR STUDY, BY PACE ENGINEERING CONSULTANTS, INC., DATED AUGUST 18, 2016.

GENERAL NOTES:

1. THE SUBJECT PROPERTY IS IDENTIFIED AS RICHLAND COUNTY TAX MAP PARCEL TMS# 11204-02-02, 06, 07 & 42.
2. TOTAL AREA OF SUBJECT PROPERTY IS 17.5 ACRES.
3. ZONING OF THE SUBJECT PARCEL TMS# 11204-02-02, 06, 07, & 42 IS "M-1". PROPOSED ZONING SHALL BE "MX-1"
4. IT IS INTENDED THAT PARCEL TMS# 11204-02-07 SHALL BE ANNEXED INTO CITY OF COLUMBIA UNDER ZONING CLASSIFICATION "MX-1"
5. CONTOUR INTERVAL ELEVATIONS ARE ONE (1) FOOT. ELEVATIONS SHOWN ARE NAVD 88 DATUM.
6. THIS PROPERTY IS PARTIALLY LOCATED IN FLOOD ZONE AE PER FLOOD INSURANCE RATE MAP NUMBER 45079C0357L, REVISED 12/21/2017, BY SCALED LOCATION AND GRAPHIC PLOTTING ONLY.
7. THE LOCATIONS OF UNDERGROUND UTILITIES SHOWN HEREON ARE APPROXIMATE. THE LOCATIONS OF OTHER UNDERGROUND UTILITIES AND THEIR SERVICES ARE UNKNOWN. CONTRACTOR SHALL LOCATE ALL UTILITIES PRIOR TO CONSTRUCTION.
8. IT IS THE CONTRACTORS RESPONSIBILITY TO VERIFY THAT THEY AND THEIR SUBCONTRACTORS HAVE THE CORRECT/MOST UP-TO-DATE PLANS AVAILABLE.
9. ALL SIDEWALKS, STRIPING AND SIGNAGE SHALL BE ADA AND MUTCD COMPLIANT.
10. ALL DIMENSIONS ARE TO FACE OF CURB UNLESS OTHERWISE NOTED.

NOTE:
INFORMATION REGARDING THE REPUTED PRESENCE, SIZE, CHARACTER AND LOCATION OF EXISTING UNDERGROUND UTILITIES AND STRUCTURES SHOWN ON THESE PLANS MAY HAVE BEEN PROVIDED TO COX AND DINKINS, INC. FROM LOCAL UTILITY COMPANIES. THERE IS NO CERTAINTY OF THE ACCURACY OF THIS INFORMATION AND IT SHALL BE CONSIDERED IN THAT LIGHT BY THOSE USING THIS DRAWING. HOWEVER, COX and DINKINS, INC. HAS NO NOTICE OR KNOWLEDGE OF ANY FACTS THAT WOULD LEAD US TO CONCLUDE THAT THE INFORMATION IS NOT ACCURATE. FURTHERMORE, OTHER UTILITIES AND STRUCTURES NOT SHOWN ON THESE PLANS MAY BE ENCOUNTERED. THE OWNER, HIS EMPLOYEES, HIS CONSULTANTS, HIS ASSIGNS AND HIS CONTRACTORS SHALL HEREBY DISTINCTLY UNDERSTAND THAT COX and DINKINS, INC. IS NOT RESPONSIBLE FOR THE CORRECTNESS OR SUFFICIENCY OF THE UNDERGROUND INFORMATION. INFORMATION WITH RESPECT TO ABOVE GROUND MONUMENTS OF SUCH UTILITIES IS BASED UPON ACTUAL FIELD MEASUREMENTS AND OBSERVATIONS, AND IS SHOWN HEREON.

The Palmetto Utility Protection Service, Inc.
810 Dutch Square Blvd, Suite 320 Columbia, South Carolina 29210 (803) 936-1117

South Carolina 811
Call Before You Dig

3 DAYS BEFORE DIGGING IN SOUTH CAROLINA
CALL 811
CONTRACTOR SHALL CONTACT THE UNDERGROUND LOCATORS EVERY 10 DAYS FOR AN UPDATE TO UTILITY LOCATIONS.

COX AND DINKINS
ENGINEERS – SURVEYORS
COX AND DINKINS, INC.
724 BELTLINE BLVD.
COLUMBIA, SC 29205
803-254-0518
Fax: 803-765-0993
Email: odinc@coxanddinkins.com

SOUTH CAROLINA REGISTERED PROFESSIONAL ENGINEER No.14890 DARREN K. HOLCOMBE
REGISTERED PROFESSIONAL ENGINEER NO. 14890

SOUTH CAROLINA CERTIFICATE OF AUTHORITY
COX AND DINKINS, INC. No. C00294
CERTIFICATE OF AUTHORITY SEAL

COPYRIGHT © 2019 COX and DINKINS, INC. ALL RIGHTS RESERVED.

REVISIONS

No.	DESCRIPTION	DATE

PRIMARY PERMITTEE:

WREI
ANDREW WEDDLE

105 MCGREGOR DRIVE
STAMFORD, CT 06902

(415) 987-4585

email: aweddle@w-rei.com

PROJECT:
"THE BALLPARK"
LOCATED IN COLUMBIA
RICHLAND COUNTY, SOUTH CAROLINA

EXISTING CONDITIONS

TMS 11204-02-02, 06, 07, & 42
BOOK N/A
SF NO. N/A
PROJECT NO. 2115
DATE 8/30/2019
SHEET NO. C1 of 3

GRAPHIC SCALE IN FEET
SCALE: 1" = 50'

REFERENCES:

1. ALTA/NSPS LAND TITLE SURVEY PREPARED FOR PROPERTY OF: CITY OF COLUMBIA, SC ELECTRIC & GAS COMPANY, BY SURVEY MATTERS, LLC., DATED NOVEMBER 21, 2018.
2. ROCKY BRANCH CLOMR STUDY, BY PACE ENGINEERING CONSULTANTS, INC., DATED AUGUST 18, 2016.

GENERAL NOTES:

1. THE SUBJECT PROPERTY IS IDENTIFIED AS RICHLAND COUNTY TAX MAP PARCEL TMS# 11204-02-02, 06, 07 & 42.
2. TOTAL AREA OF SUBJECT PROPERTY IS 17.5 ACRES.
3. ZONING OF THE SUBJECT PARCEL TMS# 11204-02-02, 06, 07, & 42 IS "M-1". PROPOSED ZONING SHALL BE "MX-1"
4. IT IS INTENDED THAT PARCEL TMS# 11204-02-07 SHALL BE ANNEXED INTO CITY OF COLUMBIA UNDER ZONING CLASSIFICATION "MX-1"
5. CONTOUR INTERVAL ELEVATIONS ARE ONE (1) FOOT. ELEVATIONS SHOWN ARE NAVD 88 DATUM.
6. THIS PROPERTY IS PARTIALLY LOCATED IN FLOOD ZONE AE PER FLOOD INSURANCE RATE MAP NUMBER 45079C0357L, REVISED 12/21/2017, BY SCALED LOCATION AND GRAPHIC PLOTTING ONLY.
7. THE LOCATIONS OF UNDERGROUND UTILITIES SHOWN HEREON ARE APPROXIMATE. THE LOCATIONS OF OTHER UNDERGROUND UTILITIES AND THEIR SERVICES ARE UNKNOWN. CONTRACTOR SHALL LOCATE ALL UTILITIES PRIOR TO CONSTRUCTION.
8. IT IS THE CONTRACTORS RESPONSIBILITY TO VERIFY THAT THEY AND THEIR SUBCONTRACTORS HAVE THE CORRECT/MOST UP-TO-DATE PLANS AVAILABLE.
9. ALL SIDEWALKS, STRIPING AND SIGNAGE SHALL BE ADA AND MUTCD COMPLIANT.
10. ALL DIMENSIONS ARE TO FACE OF CURB UNLESS OTHERWISE NOTED.

BUILDING DATA:

Building #1: 38,600 SF floor plate - 154,400 aggregate building SF
Building #2: 29,750 SF floor plate - 119,000 aggregate building SF
Building #3: 33,700 SF floor plate - 134,800 aggregate building SF
Building #4: 12,200 SF floor plate - 24,400 aggregate building SF
Building #5: 14,500 SF floor plate - 29,000 aggregate building SF
Building #6: 14,500 SF floor plate - 29,000 aggregate building SF
Total: 130,150 SF floorplate - 490,600 aggregate building SF

4-STORY BUILDING TOTALS:
428,000 SF
267 units, 601 beds
40 1-bedrooms
120 2-bedrooms
107 3-bedrooms

2-STORY COTTAGES TOTALS:
87,000 SF
43 units, 108 beds
21 2-bedrooms
22 3-bedrooms

RETAIL:
20,000 GROSS SF

APPROXIMATE UNIT MIX:
40 - 1-bedroom units - 13%
141 - 2-bedroom units - 45%
129 - 3-bedroom units - 42%

TOTALS:
310 units
709 beds

PARKING DATA

VEHICULAR PARKING REQUIRED
(1.75 Vehicular spaces per 1 bedroom unit) 1.75 x 40(1 bedroom units) = 70 required
(2 Vehicular spaces per 2 bedroom units) 2 x 141(2 bedroom units)= 282 required
(2 Vehicular spaces per 3 bedroom units) 2 x 129(3 bedroom units)= 258 required
20,000 SF retail @ 3.3 spaces/1000 SF = 66 required
TOTAL REQUIRED = 676 spaces

VEHICULAR PARKING PROVIDED

ACCESSIBLE SPACES	=16
COMPACT SPACES (8'x18')	=30
STANDARD SPACES (9'x18')	=643
TOTAL	=689 spaces provided

(##) NUMBER OF VEHICULAR PARKING SPACES

ZONING NOTE:

Existing zoning of subject parcels tms# 11204-02-02, 06, 07, & 42 is "M-1".
Proposed zoning for subject parcels TMS# 11204-02-02, 06, 07, & 42 shall be "MX-1".

SCDOT NOTE:

THE IMPROVEMENTS SHOWN IN DREYFUS ROAD, S. ASSEMBLY STREET, AND FERGUSON STREET ARE BASED ON SKETCHES PROVIDED BY KIMLEY HORN AND ARE SUBJECT TO CHANGE PER SCDOT REVIEW AND APPROVAL.

N/F WILLIAM M. GREGG TMS #R11204-02-1 DB. R0469, PG. 372 ZONE: M-1
PROPOSED FLOOD ZONE AE (FLOOD ELEVATION 163.6) (PER REF. NO. 2)
100 & 500 YEAR PROPOSED CONDITIONS FLOOD BOUNDARY (PER REF. NO. 2)
FLOODWAY (PER REF. NO. 2)
POSSIBLE OFF-SITE PEDESTRIAN PATH TO BLUFF ROAD AND ROCKY BRANCH GREEN-WAY
POSSIBLE OFF-SITE PEDESTRIAN PATH TO ROCKY BRANCH GREEN-WAY
BRIDGE OR CULVERT
N/F BETTY F. DAVIS TMS #R11204-02-38 DB. D1195, PG. 711 ZONE: RM-HD
COMPACT SPACES (8'x18')
MONUMENT SIGN
PROPOSED STREET LIGHTING (TYP.)
POSSIBLE OFF-SITE PEDESTRIAN PATH
RELOCATED CHANNEL
RIGHT-OF-WAY
DREYFUS ROAD (PUBLIC RIGHT-OF-WAY VARIES)
N/F MARK B. & KIMBERLY M. DRAFTS TMS #R11204-02-44 DB. D1302, PG. 444 ZONE: RM-HD
N/F ELIZABETH D. LOWMAN TMS #R11204-02-36 DB. D1071, PG. 764 ZONE: RM-HD
TYPE 'C' BUFFER
27.5' STREET PROTECTIVE YARD
BIKE STORAGE (TYP.)
10' MAXIMUM BUILDING SETBACK
4 STORY BLDG #3 94 RENTAL UNITS
OUTDOOR SEATING
4 STORY BLDG #2 80 RENTAL UNITS
ELEVATED PEDESTRIAN CROSSING (TYP.)
RELOCATED CHANNEL
LEASING/ CLUBHOUSE
POOL & AMENITIES
PEDESTRIAN BRIDGE
RIGHT-OF-WAY
S. ASSEMBLY STREET (PUBLIC RIGHT-OF-WAY VARIES)
EXISTING RAIL-ROAD
N/F DAVID ARD TMS #R11204-02-35 DB. R1539, PG. 3127 RM-MD
6' TALL MASONRY WALL
TYPE 'C' BUFFER
GRAVEL DRIVE (ENCROACHES 14.8')
GRAVEL
N/F DAVID ARD TMS #R11204-02-34 DB. R1539, PG. 3127 ZONE: RM-HD
N/F DAVID ARD TMS #R11204-02-33 DB. R1539, PG. 3127 ZONE: RM-HD
N/F DAVID ARD TMS #R11204-02-32 DB. R1539, PG. 3127 ZONE: RM-HD
N/F MARIE M. TYLER TMS #R11204-02-31 DB. R1192, PG. 135 ZONE: RM-HD
N/F JOHNNY E. SULLIVAN, ET AL TMS #R11204-02-30 DB. D1255, PG. 996 ZONE: RM-HD
N/F ELLEN IDELLA KIRKLAND TMS #R11204-02-29 DB. R0104, PG. 103 ZONE: RM-HD
TYPE 'A' BUFFER
N/F ELLEN IDELLA KIRKLAND-TATE TMS #R11204-02-28 DB. R0807, PG. 3066 ZONE: RM-HD
N/F IDELLA M. & ELLEN IDELLA KIRKLAND TMS #R11204-02-27 DB. R0104, PG. 106 ZONE: RM-HD
2 STORY BLDG #6 ATTACHED RENTALS
2 STORY BLDG #4 ATTACHED RENTALS
2 STORY BLDG #5 ATTACHED RENTALS
LINEAR PARK
RETAIL COURTYARD
RETAIL (20,000 SF)
88 RENTAL UNITS
4 STORY BLDG #1
MONUMENT SIGN
27.5' STREET PROTECTIVE YARD (AVERAGED)
10' MAXIMUM BUILDING SETBACK
PROPOSED STREET LIGHTING (TYP.)
BUS STOP
FUTURE SIGNALIZED INTERSECTION
N/F EDWIN CHARLES HOLBROOK TMS #R11204-02-3 DB. R1574, PG. 3931 ZONE: RM-HD
HAMRICK STREET (40 FOOT RIGHT-OF-WAY)
N/F WILLIAM C. STEVENSON TMS #R11204-02-47 DB. R0200, PG. 195 ZONE: M-1
METAL BUILDING
N/F WILLIAM C. STEVENSON TMS #R11204-02-11 DB. R0296, PG. 587 ZONE: M-1
LOADING DOCK
N/F BLOSSOM SHOP INC TMS #R11204-02-10 DB. R0195, PG. 857 ZONE: M-1
FIRE STATION
N/F CITY OF COLUMBIA TMS #R11204-02-43 DB. R0182, PG. 36 ZONE: M-1
N/F JEFFERY D. & AMBERLY L. AMBERG TMS #R11204-02-46 DB. D1245, PG. 212 ZONE: M-1
N/F MILTON L. BRAZELL TMS #R11204-02-08 DB. D1271, PG. 185 ZONE: M-1
METAL BUILDING
EXISTING PARCEL TMS# 11204-02-07 TO BE ANNEXED INTO THE CITY OF COLUMBIA
FERGUSON STREET (40 FOOT RIGHT-OF-WAY)
CITY
COUNTY

0 50 100 150 200
GRAPHIC SCALE IN FEET
SCALE: 1" = 50'

NOTE:
INFORMATION REGARDING THE REPUTED PRESENCE, SIZE, CHARACTER AND LOCATION OF EXISTING UNDERGROUND UTILITIES AND STRUCTURES WAS OBTAINED FROM LOCAL UTILITY COMPANIES AND AVAILABLE DRAWINGS SUPPLIED BY THE OWNER AND IS SHOWN HEREON. THERE IS NO CERTAINTY OF THE ACCURACY OF THIS INFORMATION AND IT SHALL BE CONSIDERED IN THAT LIGHT BY THOSE USING THIS DRAWING, HOWEVER, COX and DINKINS, INC. HAS NO NOTICE OR KNOWLEDGE OF ANY FACTS THAT WOULD LEAD US TO CONCLUDE THAT THE INFORMATION IS NOT ACCURATE. BUT UTILITIES AND STRUCTURES NOT SHOWN MAY BE ENCOUNTERED, THE OWNER, HIS EMPLOYEES, HIS CONSULTANTS, HIS ASSIGNS AND HIS CONTRACTORS SHALL HEREBY DISTINCTLY UNDERSTAND THAT COX and DINKINS, INC. IS NOT RESPONSIBLE FOR THE CORRECTNESS OR SUFFICIENCY OF THE UNDERGROUND INFORMATION. INFORMATION WITH RESPECT TO ABOVE GROUND MONUMENTS OF SUCH UTILITIES IS BASED UPON ACTUAL FIELD MEASUREMENTS AND OBSERVATIONS, AND IS SHOWN HEREON.

The Palmetto Utility Protection Service, Inc.
810 Dutch Square Blvd, Suite 320 Columbia, South Carolina 29210 (803) 936-1117
South Carolina 811 Call Before You Dig
3 DAYS BEFORE DIGGING IN SOUTH CAROLINA
CALL 811
CONTRACTOR SHALL CONTACT THE UNDERGROUND LOCATORS EVERY 10 DAYS FOR AN UPDATE TO UTILITY LOCATIONS.

COX AND DINKINS
ENGINEERS – SURVEYORS
COX AND DINKINS, INC.
724 BELTLINE BLVD.
COLUMBIA, SC 29205
803-254-0518
Fax: 803-765-0993
Email: odinc@coxanddinkins.com

SOUTH CAROLINA REGISTERED PROFESSIONAL ENGINEER No.14890 DARREN K. HOLCOMBE
REGISTERED PROFESSIONAL ENGINEER NO. 14890

SOUTH CAROLINA CERTIFICATE OF AUTHORITY COX AND DINKINS, INC. No. C00294
CERTIFICATE OF AUTHORIZATION SEAL

REVISIONS

No.	DATE	DESCRIPTION

COPYRIGHT © 2019 COX and DINKINS, INC. ALL RIGHTS RESERVED.

PRIMARY PERMITTEE:
WREI
ANDREW WEDDLE
105 MCGREGOR DRIVE
STAMFORD, CT 06902
(415) 987-4585
email: aweddle@w-rei.com

PROJECT:
"THE BALLPARK"
LOCATED IN COLUMBIA
RICHLAND COUNTY, SOUTH CAROLINA

SITE PLAN

TMS 11204-02-02, 06, 07, & 42
BOOK N/A
SF NO. N/A
PROJECT NO. 2115
DATE 8/30/2019
SHEET NO. C2 of 3

G:\Proj\2115 Capital City Stadium\DRAWINGS\2115_Site.dwg, Plotted By: DLH, Plotted: Aug 30, 2019 - 11:19am

REFERENCES:

1. ALTA/NSPS LAND TITLE SURVEY PREPARED FOR PROPERTY OF: CITY OF COLUMBIA, SC ELECTRIC & GAS COMPANY, BY SURVEY MATTERS, LLC., DATED NOVEMBER 21, 2018.
2. ROCKY BRANCH CLOMR STUDY, BY PACE ENGINEERING CONSULTANTS, INC., DATED AUGUST 18, 2016.

GENERAL NOTES:

1. THE SUBJECT PROPERTY IS IDENTIFIED AS RICHLAND COUNTY TAX MAP PARCEL TMS# 11204-02-02, 06, 07 & 42.
2. TOTAL AREA OF SUBJECT PROPERTY IS 17.5 ACRES.
3. ZONING OF THE SUBJECT PARCEL TMS# 11204-02-02, 06, 07, & 42 IS "M-1", PROPOSED ZONING SHALL BE "MX-1"
4. IT IS INTENDED THAT PARCEL TMS# 11204-02-07 SHALL BE ANNEXED INTO CITY OF COLUMBIA UNDER ZONING CLASSIFICATION "MX-1".
5. CONTOUR INTERVAL ELEVATIONS ARE ONE (1) FOOT. ELEVATIONS SHOWN ARE NAVD 88 DATUM.
6. THIS PROPERTY IS PARTIALLY LOCATED IN FLOOD ZONE AE PER FLOOD INSURANCE RATE MAP NUMBER 45079C0357L, REVISED 12/21/2017, BY SCALED LOCATION AND GRAPHIC PLOTTING ONLY.
7. THE LOCATIONS OF UNDERGROUND UTILITIES SHOWN HEREON ARE APPROXIMATE. THE LOCATIONS OF OTHER UNDERGROUND UTILITIES AND THEIR SERVICES ARE UNKNOWN. CONTRACTOR SHALL LOCATE ALL UTILITIES PRIOR TO CONSTRUCTION.
8. IT IS THE CONTRACTORS RESPONSIBILITY TO VERIFY THAT THEY AND THEIR SUBCONTRACTORS HAVE THE CORRECT/MOST UP-TO-DATE PLANS AVAILABLE.
9. ALL SIDEWALKS, STRIPING AND SIGNAGE SHALL BE ADA AND MUTCD COMPLIANT.
10. ALL DIMENSIONS ARE TO FACE OF CURB UNLESS OTHERWISE NOTED.

LANDSCAPE REQUIREMENTS

1. Tree Survey Provided
2. Tree Density Factor (DFS):
   - Mixed Use Development: 30 units/AC = 17.49 AC x 30 = 524.7 units req.
   - Existing Credits for Trees Remaining = 51.6
     (26" Laurel Oak, 30" Water Oak)
   - Required replacement credits for Grand Trees removed =118.2
     (24" Oak, 24" Oak, 26" Laurel Oak, 30" Laurel Oak, 30" Laurel Oak)
   - Total required DFS units including replacement credits = 642.9
   - Required additional credits to satisfy DFS = 591.3
   - Total Units provided on proposed plan and via payment-in-lieu into the City of Columbia
   - Landscape and Tree Fund: 592 units = (296) 4" cal. trees OR (395) 3" cal. trees OR (592) 2" cal. trees
3. Street Protective Yard (SPY):
   - 17.49 AC site = 27.5' Street Protective Yard required
   - Assembly Street frontage (minus bus stop):
   - 587 LF frontage
   - **Overhead Powerlines exist along the Assembly Street R/W necessitating the installation of small maturing trees at 30' o.c. in place of large shade trees
   - 587/30 = 20 Small Maturing Trees required and provided
   - 587' x 27.5' = 16,142 SF required and provided
   - Dreyfus Road frontage (minus entry drive):
   - 324 LF frontage
   - 324/40 = 8 Trees required and provided
   - 324' x 27.5' = 8,910 SF required and provided
   - Ferguson Street frontage (minus entry drive):
   - 563 LF frontage
   - 563/40 = 14 Trees required and provided
   - 563' x 27.5' = 15,482 SF required and provided
4. Buffer Transition Yard (BTY):
   - Proposed Use: Mixed Use Residential and Retail Development (High Impact Residential Use)
   - Adjacent Uses: Low Impact Residential Use, High Impact Residential Use, Medium Impact Commercial Use, Vacant and Undeveloped (see plan for locations)
   - Required Buffer Transistion Yards:
   - 10' Type 'A': (20) shrubs and 6" tree caliper/100 LF
   - 777 LF = (156) shrubs and 47" tree caliper required and provided
   - 30' Type 'C': (60) shrubs and 8" tree caliper/100 LF
   - 832 LF - 512 LF (masonry wall) = 320 LF = (192) shrubs
   - 832 LF - 67" tree caliper required and provided
   - -a 6' masonry wall is proposed for approximately 512 LF of the required 30' Type 'C' Buffer allowing for a 50% reduction in width, optional installation of shrubs and optional 50% use of small maturing trees in place of large shade trees. See plan for location
5. Vehicular Surface Area (VSA):
   - 240,100 SF proposed VSA
   - 1 tree/ 3200 SF = 240,400/3200 = 75 trees required and provided
   - Shrubs, groundcover or turf shall be planted so that a minimum of 60% coverage is achieved in the interior landscape areas.
   - *All parking spaces shall be located no further that 40' from the trunk a shade tree
   - *VSA shall be screened from view from adjacent R/W by an opaque screen of evergreen shrubs min. 2' height at planting
6. Screening of Trash Collection areas and Utility Service areas:
   - Screening of trash collection areas and utility service areas shall be accomplished with a combination of opaque masonry or wood walls and landscaping. Screen to be 1 foot taller than item to be screened.

Notes:
- *trees shall be a min. 2" caliper at installation and shall be listed as acceptable plants in the City's administrative guidelines
- *any trees planted to satisfy other landscape requirements may be counted toward DFS
- *a minimum of 60% of the ground surface of SPY shall have turf or other vegetative coverage
- *all plant height, size and density requirements not specifically addressed above shall be met
- ***all plant material shall be mechanically irrigated**

LANDSCAPE LEGEND

- LARGE MATURING SHADE TREE
- SMALL TO MEDIUM MATURING TREE
- LARGE SHRUB
- SMALL SHRUB
- 10' TYPE 'A' BUFFER - SEE LANDSCAPE REQUIREMENTS ON THIS SHEET
- 30' TYPE 'C' BUFFER - SEE LANDSCAPE REQUIREMENTS ON THIS SHEET

NOTE:
INFORMATION REGARDING THE REPUTED PRESENCE, SIZE, CHARACTER AND LOCATION OF EXISTING UNDERGROUND UTILITIES AND STRUCTURES SHOWN ON THESE PLANS MAY HAVE BEEN PROVIDED TO COX AND DINKINS, INC. FROM LOCAL UTILITY COMPANIES. THERE IS NO CERTAINTY OF THE ACCURACY OF THIS INFORMATION AND IT SHALL BE CONSIDERED IN THAT LIGHT BY THOSE USING THIS DRAWING. HOWEVER, COX and DINKINS, INC. HAS NO NOTICE OR KNOWLEDGE OF ANY FACTS THAT WOULD LEAD US TO CONCLUDE THAT THE INFORMATION IS NOT ACCURATE. FURTHERMORE, OTHER UTILITIES AND STRUCTURES NOT SHOWN ON THESE PLANS MAY BE ENCOUNTERED. THE OWNER, HIS EMPLOYEES, HIS CONSULTANTS, HIS ASSIGNS AND HIS CONTRACTORS SHALL HEREBY DISTINCTLY UNDERSTAND THAT COX and DINKINS, INC. IS NOT RESPONSIBLE FOR THE CORRECTNESS OR SUFFICIENCY OF THE UNDERGROUND INFORMATION, INFORMATION WITH RESPECT TO ABOVE GROUND MONUMENTS OF SUCH UTILITIES IS BASED UPON ACTUAL FIELD MEASUREMENTS AND OBSERVATIONS, AND IS SHOWN HEREON.

The Palmetto Utility Protection Service, Inc.
810 Dutch Square Blvd, Suite 320 Columbia, South Carolina 29210 (803) 936-1117
South Carolina 811
811 or 1-888-721-7877
3 DAYS BEFORE DIGGING IN SOUTH CAROLINA
CALL 811
CONTRACTOR SHALL CONTACT THE UNDERGROUND LOCATORS EVERY 10 DAYS FOR AN UPDATE TO UTILITY LOCATIONS.

COX AND DINKINS
ENGINEERS - SURVEYORS
COX AND DINKINS, INC.
724 BELTLINE BLVD.
COLUMBIA, SC 29205
803-254-0518
Fax: 803-765-0993
Email: cdinc@coxanddinkins.com

COPYRIGHT © 2019 COX and DINKINS, INC. ALL RIGHTS RESERVED.

STATE OF SOUTH CAROLINA — REGISTERED LANDSCAPE ARCHITECT — No.1057 — RICHARD CHAPPELL
10/30/19
REGISTERED LANDSCAPE ARCHITECT NO. 1057

SOUTH CAROLINA — COX AND DINKINS, INC. — No. 361 — CERTIFICATE OF AUTHORIZATION
CERTIFICATE OF AUTHORIZATION SEAL

REVISIONS

No.	DESCRIPTION	DATE

PRIMARY PERMITTEE:
WREI
ANDREW WEDDLE
105 MCGREGOR DRIVE
STAMFORD, CT 06902
(415) 987-4585
email: aweddle@w-rei.com

PROJECT:
"THE BALLPARK"
LOCATED IN COLUMBIA
RICHLAND COUNTY, SOUTH CAROLINA

LANDSCAPE PLAN

TMS	11204-02-02, 06, 07, & 42
BOOK	N/A
SF NO.	N/A
PROJECT NO.	2115
DATE	8/30/2019
SHEET NO.	L1 of 3

G:\Proj\2115 Capitol City Stadium\DRAWINGS\2115_Landscape.dwg, Plotted By: JDC, Plotted: Aug 30, 2019 11:57am

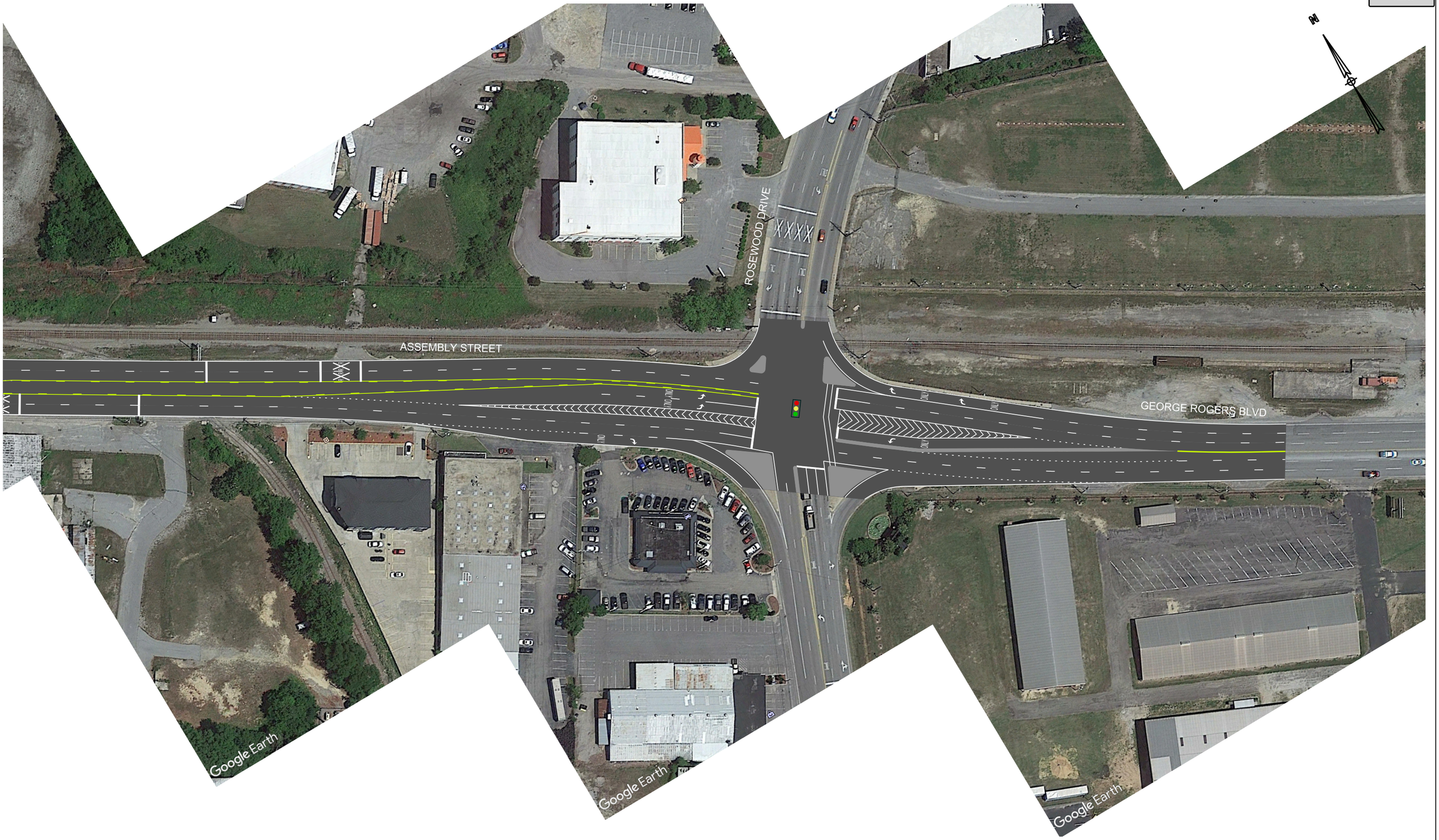

Kimley»Horn
SC License #C00166
802 GERVAIS STREET
SUITE 201
COLUMBIA, SC 29201
PHONE 803-403-8558

© 2018

CAPITAL CITY BALL PARK, COLUMBIA, SC
ASSEMBLY STREET RESURFACING

DATE: 06-06-2019
SHEET 1 OF 3

0 50' 100' 150'
GRAPHIC SCALE

THIS DOCUMENT, TOGETHER WITH THE CONCEPTS AND DESIGNS PRESENTED HEREIN, AS AN INSTRUMENT OF SERVICE, IS INTENDED ONLY FOR THE SPECIFIC PURPOSE AND CLIENT FOR WHICH IT WAS PREPARED. REUSE OF AND IMPROPER RELIANCE ON THIS DOCUMENT WITHOUT WRITTEN AUTHORIZATION AND ADAPTATION BY KIMLEY-HORN AND ASSOCIATES, INC. SHALL BE WITHOUT LIABILITY TO KIMLEY-HORN AND ASSOCIATES, INC.

Kimley»Horn
SC License #C00166
802 GERVAIS STREET
SUITE 201
COLUMBIA, SC 29201
PHONE 803-403-8558
© 2018

CAPITAL CITY BALL PARK, COLUMBIA, SC
ASSEMBLY STREET RESURFACING

DATE: 06-06-2019
SHEET 2 OF 3

0 50' 100' 150'
GRAPHIC SCALE

THIS DOCUMENT, TOGETHER WITH THE CONCEPTS AND DESIGNS PRESENTED HEREIN, AS AN INSTRUMENT OF SERVICE, IS INTENDED ONLY FOR THE SPECIFIC PURPOSE AND CLIENT FOR WHICH IT WAS PREPARED. REUSE OF AND IMPROPER RELIANCE ON THIS DOCUMENT WITHOUT WRITTEN AUTHORIZATION AND ADAPTATION BY KIMLEY-HORN AND ASSOCIATES, INC. SHALL BE WITHOUT LIABILITY TO KIMLEY-HORN AND ASSOCIATES, INC.

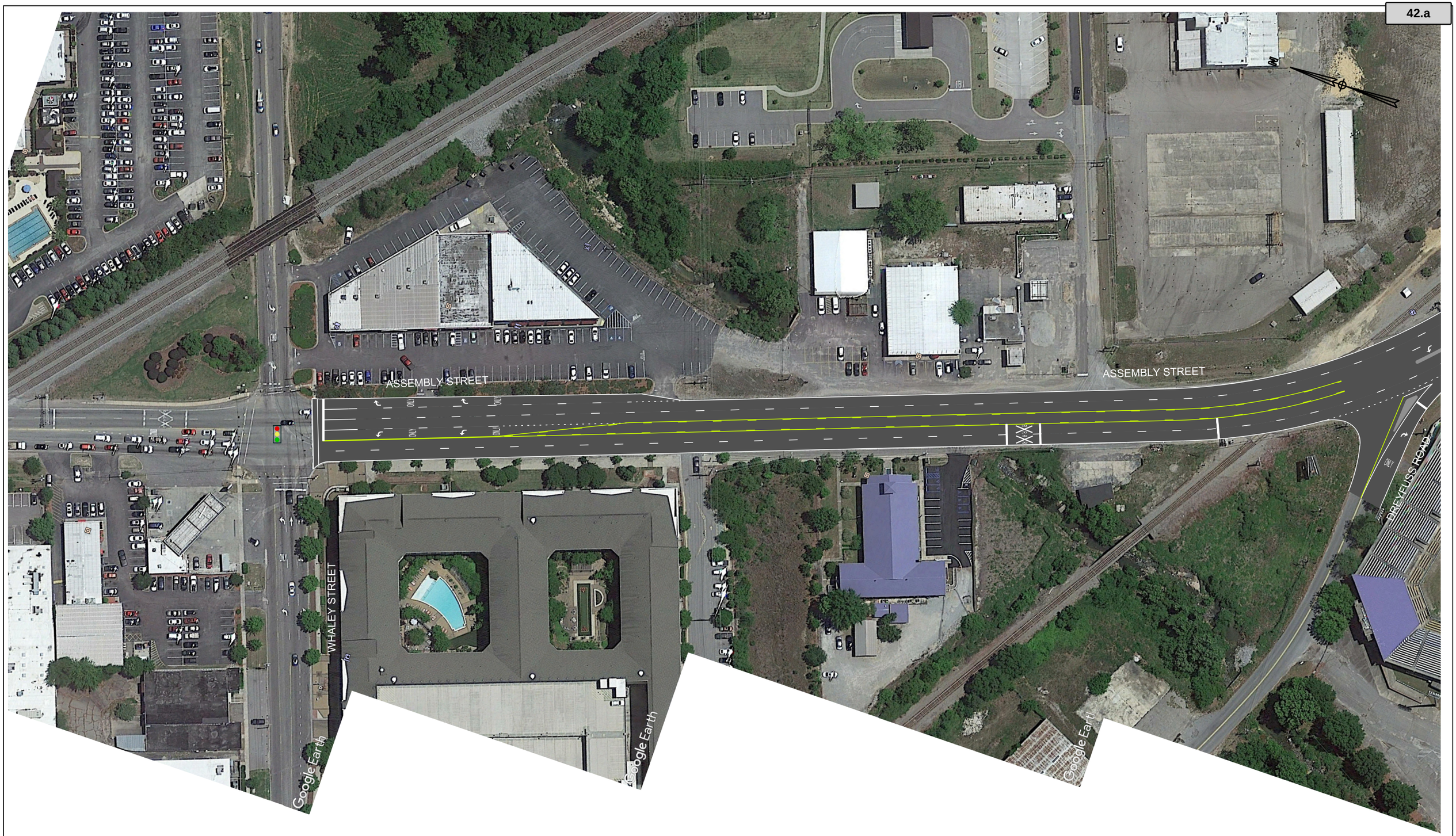

Kimley»Horn
SC License #C00166
802 GERVAIS STREET
SUITE 201
COLUMBIA, SC 29201
PHONE 803-403-8558
© 2018

CAPITAL CITY BALL PARK, COLUMBIA, SC
ASSEMBLY STREET RESURFACING

DATE: 06-06-2019
SHEET 3 OF 3

0 50' 100' 150'
GRAPHIC SCALE

THIS DOCUMENT, TOGETHER WITH THE CONCEPTS AND DESIGNS PRESENTED HEREIN, AS AN INSTRUMENT OF SERVICE, IS INTENDED ONLY FOR THE SPECIFIC PURPOSE AND CLIENT FOR WHICH IT WAS PREPARED. REUSE OF AND IMPROPER RELIANCE ON THIS DOCUMENT WITHOUT WRITTEN AUTHORIZATION AND ADAPTATION BY KIMLEY-HORN AND ASSOCIATES, INC. SHALL BE WITHOUT LIABILITY TO KIMLEY-HORN AND ASSOCIATES, INC.

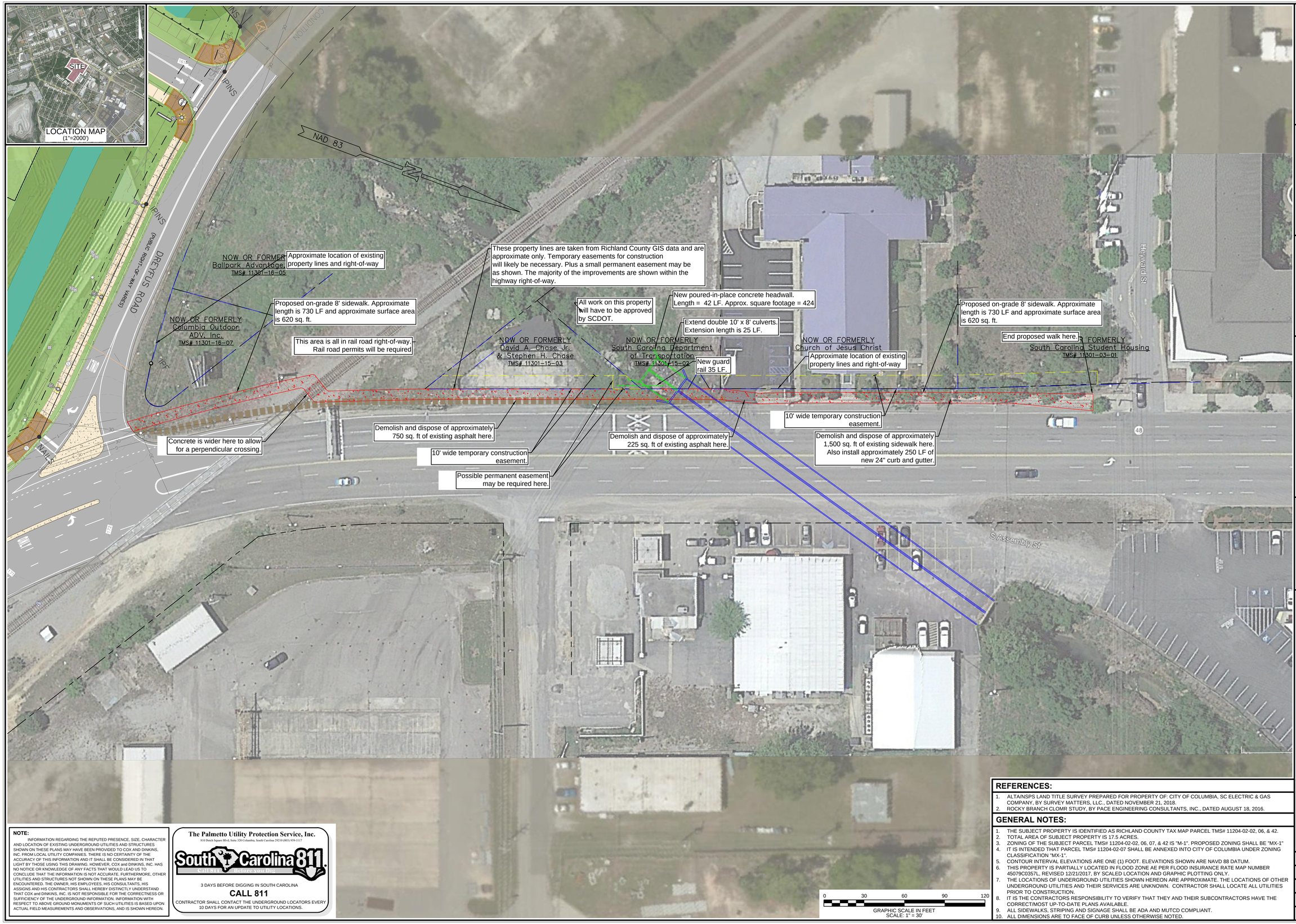

NOTE:

INFORMATION REGARDING THE REPUTED PRESENCE, SIZE, CHARACTER AND LOCATION OF EXISTING UNDERGROUND UTILITIES AND STRUCTURES SHOWN ON THESE PLANS MAY HAVE BEEN PROVIDED TO COX AND DINKINS, INC. FROM LOCAL UTILITY COMPANIES. THERE IS NO CERTAINTY OF THE ACCURACY OF THIS INFORMATION AND IT SHALL BE CONSIDERED IN THAT LIGHT BY THOSE USING THIS DRAWING, HOWEVER, COX and DINKINS, INC. HAS NO NOTICE OR KNOWLEDGE OF ANY FACTS THAT WOULD LEAD US TO CONCLUDE THAT THE INFORMATION IS NOT ACCURATE. FURTHERMORE, OTHER UTILITIES AND STRUCTURES NOT SHOWN ON THESE PLANS MAY BE ENCOUNTERED. THE OWNER, HIS EMPLOYEES, HIS CONSULTANTS, HIS ASSIGNS AND HIS CONTRACTORS SHALL HEREBY DISTINCTLY UNDERSTAND THAT COX and DINKINS, INC. IS NOT RESPONSIBLE FOR THE CORRECTNESS OR SUFFICIENCY OF THE UNDERGROUND INFORMATION. INFORMATION WITH RESPECT TO ABOVE GROUND MONUMENTS OF SUCH UTILITIES IS BASED UPON ACTUAL FIELD MEASUREMENTS AND OBSERVATIONS, AND IS SHOWN HEREON.

The Palmetto Utility Protection Service, Inc.
810 Dutch Square Blvd, Suite 320 Columbia, South Carolina 29210 (803) 939-1117

South Carolina 811
Call Before You Dig

3 DAYS BEFORE DIGGING IN SOUTH CAROLINA

CALL 811

CONTRACTOR SHALL CONTACT THE UNDERGROUND LOCATORS EVERY 10 DAYS FOR AN UPDATE TO UTILITY LOCATIONS.

REFERENCES:

1. ALTA/NSPS LAND TITLE SURVEY PREPARED FOR PROPERTY OF: CITY OF COLUMBIA, SC ELECTRIC & GAS COMPANY, BY SURVEY MATTERS, LLC., DATED NOVEMBER 21, 2018.
2. ROCKY BRANCH CLOMR STUDY, BY PACE ENGINEERING CONSULTANTS, INC., DATED AUGUST 18, 2016.

GENERAL NOTES:

1. THE SUBJECT PROPERTY IS IDENTIFIED AS RICHLAND COUNTY TAX MAP PARCEL TMS# 11204-02-02, 06, & 42.
2. TOTAL AREA OF SUBJECT PROPERTY IS 17.5 ACRES.
3. ZONING OF THE SUBJECT PARCEL TMS# 11204-02-02, 06, 07, & 42 IS "M-1". PROPOSED ZONING SHALL BE "MX-1"
4. IT IS INTENDED THAT PARCEL TMS# 11204-02-07 SHALL BE ANNEXED INTO CITY OF COLUMBIA UNDER ZONING CLASSIFICATION "MX-1".
5. CONTOUR INTERVAL ELEVATIONS ARE ONE (1) FOOT. ELEVATIONS SHOWN ARE NAVD 88 DATUM.
6. THIS PROPERTY IS PARTIALLY LOCATED IN FLOOD ZONE AE PER FLOOD INSURANCE RATE MAP NUMBER 45079C0357L, REVISED 12/21/2017, BY SCALED LOCATION AND GRAPHIC PLOTTING ONLY.
7. THE LOCATIONS OF UNDERGROUND UTILITIES SHOWN HEREON ARE APPROXIMATE. THE LOCATIONS OF OTHER UNDERGROUND UTILITIES AND THEIR SERVICES ARE UNKNOWN. CONTRACTOR SHALL LOCATE ALL UTILITIES PRIOR TO CONSTRUCTION.
8. IT IS THE CONTRACTORS RESPONSIBILITY TO VERIFY THAT THEY AND THEIR SUBCONTRACTORS HAVE THE CORRECT/MOST UP-TO-DATE PLANS AVAILABLE.
9. ALL SIDEWALKS, STRIPING AND SIGNAGE SHALL BE ADA AND MUTCD COMPLIANT.
10. ALL DIMENSIONS ARE TO FACE OF CURB UNLESS OTHERWISE NOTED.

COX AND DINKINS
ENGINEERS – SURVEYORS
COX AND DINKINS, INC.
724 BELTLINE BLVD.
COLUMBIA, SC 29205
803-254-0518
Fax: 803-765-0993
Email: cdinc@coxanddinkins.com

COPYRIGHT © 2019 COX and DINKINS, INC. ALL RIGHTS RESERVED

SOUTH CAROLINA REGISTERED PROFESSIONAL ENGINEER No.14890 DARREN K. HOLCOMBE

REGISTERED PROFESSIONAL ENGINEER NO. 14890

COX AND DINKINS, INC. No. C00294 SOUTH CAROLINA CERTIFICATE OF AUTHORITY

CERTIFICATE OF AUTHORIZATION SEAL

REVISIONS

No.	DESCRIPTION	DATE

PRIMARY PERMITTEE:

WREI
ANDREW WEDDLE

105 MCGREGOR DRIVE
STAMFORD, CT 06902

(415) 987-4585

email: aweddle@w-rei.com

PROJECT:

"THE BALLPARK"

LOCATED IN COLUMBIA
RICHLAND COUNTY, SOUTH CAROLINA

ASSEMBLY STREET PROPOSED WALKWAY

TMS	11204-02-02, 06, 07, & 42
BOOK	N/A
SF NO.	N/A
PROJECT NO.	2115
DATE	7/3/2019
SHEET NO.	1 of 1

G:\Projects\2115 Capitol City Stadium\DRAWINGS\TEMP\2019-07-15 Offsite Assembly Walk Sketch\2115 Assembly offsite walk sketch.dwg, Plotted By: DKH, Plotted: Jul 16, 2019 - 11:51am

Preliminary Budget -- Ballpark Mixed-Use Development

Rocky Branch Flood Mitigation & Olympia Park Stream Restoration

Engineering, Design & Permitting		
Olympia Park Stream Restoration (EPC: Environ. Permitting Consultants)		621,315
Rocky Branch Flooding (PACE Engineering)		165,000
Box Culverts & DOT Olympia Ave. (Genesis Consulting)		15,000
Geo technical & Environmental testing (Vulcan soils)		17,900
Permits		15,000
Surveying		15,000
Total Engineering, Design & Permitting		**849,215**
Land, Legal & Insurance		
CSX Land Purchase		159,000
Other Land Purchase or Easement		35,000
Legal		25,000
Insurance & Performance Bond		66,809
Total Land, Legal & Insurance		**285,809**
Excavate Channel, Remove Trestle, Install 72" RCP and Box Culverts		**3,490,000**
Environmental Contingency (Soil Contamination)		**200,000**
Contingency (% of overall budget)		253,949
Total Flood Mitigation & Park / Stream Restoration Cost		**5,078,972**

Preliminary Budget -- Ballpark Mixed-Use Development

Public Improvements (DOT: Assembly & Ferguson; RB Connect Multi-Modal Paths, Greenway)

DOT Road Improvements		
DOT Road Improvements - *Assembly Street (Mill, Pave, Re-mark)*		642,000
DOT Road Improvements - *Ferguson Street*		325,000
Total DOT Road Improvements		**967,000**
Rocky Branch Channel Improvements		
Channel Connection: Rocky Branch Clean & Flow Improve Allowance		135,000
Channel Improvement (Amenity: Rock Structures & Bridges from Assembly)		185,000
Total Rocky Branch Channel Improvements		**320,000**
Multi-Modal Paths Around Site and Up Assembly to Younion		
Multi-Modal Path (Surrounding Site) Allowance: Assembly, Ferguson, Dreyfus		235,000
Multi-Modal Path OFF-Site Allowance: Dreyfus to Church (Site to Aspyre/Younion)		85,000
Rocky Branch Crossing on Assembly To Aspyre (Bridge & Box Culverts) - Allowance		190,000
Total Multi-Modal Paths Around Site and Up Assembly to Younion		**510,000**
Traffic Signal & Bus Stop/Shelter		
Traffic Signal: Ferguson/Assembly		130,000
Comet Bus & USC Shuttle Stop/Shelter		10,000
Total Traffic Signal & Bus Stop/Shelter		**140,000**
Professional Services Allocation (Legal & Civil Engineering)		
Legal Allocation	*10%*	20,000
Civil Engineering Allocation	*10%*	30,000
Total Professional Services Allocation (Legal & Civil Engineering)		**50,000**
Additional Public Improvements & Contributions		
Greenway Contribution		250,000
Historic Columbia Contribution		60,000
Security		Not Included
Total Public Improvements & Contributions		**310,000**
Total Other Public Improvements (Partial List)		**2,297,000**
Total Flood Mitgation, Stream Restoration, Road, Paths, Greenway & "Other"		**7,375,972**

Ballpark Mixed-Use Development

(310 Units & 20,000sf of Retail)

Preliminary Budget

Category			Total Cost
Land			
City Contract	1,625,000		
- Security	40,000		
- Historic Columbia Donation	60,000		
- Greenway Contribution	250,000		
SCE&G -- Dominion	2,880,000		
Large	115,000		
Other [1]	250,000		
Total Land			**5,220,000**
Off-Site Land: Flood Mitigation & Stream Restoration			
Total Engineering, Design & Permitting	849,215		
Total Land, Legal & Insurance	285,809		
Excavate Channel, Remove Trestle, Install 72" RCP and Box Culverts	3,490,000		
Environmental Contingency (Soil Contamination)	200,000		
Contingency (% of overall budget)	253,949		
Total Flood Mitigation & Park / Stream Restoration Cost			**5,078,972**
Sitework & Hard			
Demolition			150,000
On-Site: Earthwork, Relocate Utilities & Stream, Environ.		*75%*	2,294,925
Total DOT Road Improvements			967,000
Total Rocky Branch Channel Improvements			320,000
Hard Building Cost (Units, Clubhouse, Retail, Upfit)		*78.0%*	39,167,731
Hard Contingency		*52%*	947,801
Total Sitework & Hard			**43,847,457**
Multi-Modal Paths, Signal, Bus Stop & Landscaping			
Total Multi-Modal Paths Around Site and Up Assembly to Younion			510,000
Total Traffic Signal & Bus Stop/Shelter			140,000
Landscaping			350,000
Other			
Total Multi-Modal Paths, Signal, Bus Stop & Landscaping			**1,000,000**
Soft, Financing & FF&E			
Furniture, Fixtures & Equipment		*49%*	972,748
Soft & Financing		*60%*	7,022,549
Total FF&E, Soft & Financing			**7,995,297**
Other			0
Total Preliminary Budget			**63,141,727**

Preliminary Sources & Uses
Ballpark Mixed-Use Development

Sources	% Total	Amount
Equity (Cash)	18%	11,409,495
Proceeds: Sale of Abandon Building Credits	3%	1,860,000
Pledge/Contributed Fees	2%	1,253,102
Mezzanine Debt	0%	0
Senior Debt	77%	48,619,130
Total Sources	**100%**	**63,141,727**

Uses	% Total	Amount
Land	8%	5,220,000
Off-Site Land: Flood Mitigation & Stream Restoration)	8%	5,078,972
Sitework & Hard	69%	43,847,457
Multi-Modal Paths, Signal, Bus Stop & Landscaping	2%	1,000,000
Soft, Financing & FF&E	13%	7,995,297
Other	0%	
Total Sources	**100%**	**63,141,727**

LEGAL DEPARTMENT DRAFT

ORDINANCE NO.: 2019-095

Authorizing the City Manager to execute a Lease and Management Agreement between the City of Columbia and Columbia Dog Park, a South Carolina Charitable Organization for property located at 127 Humane Lane

BE IT RESOLVED by the Mayor and City Council this ___ day of _____, 2019 that the City Manager is authorized to execute the attached Lease and Management Agreement between the City of Columbia and Columbia Dog Park, a South Carolina Charitable Organization, or on a form approved by the City Attorney, for the use and management of a dog park by Columbia Dog Park, a South Carolina Charitable Organization, on approximately 1.2 acres adjacent to the City Animal Services Facility at 127 Humane Lane for the annual sum of Nine Thousand Six Hundred and No/100 ($9,600.00) Dollars.

(Funding source: 1015101-636600)

Requested by:

Assistant City Manager Simons

Approved by:

_____
City Manager

Approved as to form:

_____
Deputy City Attorney

_____
Mayor

ATTEST:

_____
City Clerk

Introduced:
Final Reading:

Last revised: 11/12/2019
19003351

CITY OF COLUMBIA

We Are Columbia

This lease and management agreement is made by and between the City of Columbia ("City")and Columbia Dog Park, a South Carolina charitable organization, and is effective upon the date last signed by either party hereto.

WHEREAS, the City is the owner of 1.2 (+/-) acres of land, more or less, adjacent to the City Animal Services Facility, 127 Humane Lane ("Park.")

WHEREAS, Columbia Dog Park has expressed interest in maintaining the Park exclusively for dogs and their owners; and,

WHEREAS, the City is desirous of leasing the property to Columbia Dog Park for such purposes and retaining the services of Columbia Dog Park to manage said Park for the City,

NOW, THEREFORE, for and in consideration of the mutual promises and conditions contained herein, the parties agree as follows:

1. The City hereby leases to Columbia Dog Park and Columbia Dog Park leases from the City the real property containing 1.2 acres of land, more or less, adjacent to the City Animal Services Facility, 127 Humane Lane, as is currently used for the benefit of dogs and their owners.

2. The term of the lease agreement is for three years from the date this lease agreement is signed, unless earlier terminated as provided for herein.

3. The City agrees to pay Columbia Dog Park Nine Thousand Six Hundred Dollars and zero cents ($9,600.00) annually, in equal monthly installments, to manage the Park as set forth in this agreement and the agreed-upon rules for the Park attached under cover of this agreement. Columbia Dog Park will provide the City with a monthly accounting showing how these funds were spent within thirty (30) days from the end of the preceding month. The City shall have the right to demand an accounting and to audit Columbia Dog Park's books at any time, as the City may request.

4. Columbia Dog Park agrees to do the following:

a. Provide registration for Columbia Dog Park members and maintain a register of members during the term of the lease agreement. The City shall have the right to inspect such records at any time as it may, from time to time, request. Columbia Dog Park will make records immediately available upon request. Upon termination of this lease agreement, Columbia Dog Park will provide the City with the records.

b. Columbia Dog Park members will be allowed to use the Park at any time it may be open for an annual fee of $50.00. All membership and nonmember fees collected by Columbia Dog Park will be used by Columbia Dog Park to operate and maintain the Park. Columbia Dog Park will provide the City with a monthly accounting showing the fees collected and how these funds were spent. The City shall have the right to demand an accounting and to audit Columbia Dog Park's books at any time, as the City may request.

c. Submit proposed rules and regulations to the City's Director of Parks and Recreation for approval.

d. Purchase and maintain during the term of this lease agreement a general liability policy of insurance in its name, with the City of Columbia named as an additional insured, in an amount not less than six hundred thousand ($600,000.00) dollars per occurrence and two million ($2,000,000.00) dollars aggregate combined single limit for bodily injury, personal injury and property damage. The policy shall provide that the insurer will provide written notice to the City at least thirty (30) days prior to the cancellation, termination or modification of the City's coverage.

e. Non-members and members of the general public will be allowed to use the Park on Sundays from 2pm-6pm (September 30th - April 30th)and 5pm - 9pm (May 1st - August 31st).

f. Non-members must keep in their possession valid shot records of their dog prior to and during attendance at the Park.

g. Non-members must sign a registration form in order to attend on designated Sundays.

5. The City agrees to maintain:

a. The site for use as a dog park by maintaining the existing fencing, parking lot, to provide water and signage as the City deems appropriate in its sole discretion.

b. Utilities to the site (Water and Electricity).

The Columbia Dog Park will monitor the behavior of its members and nonmembers and their dogs while in the park.

6. Columbia Dog Park and the City will jointly be responsible for additional maintenance of the Park. Maintenance by the City will be at such levels as the City deems appropriate in its sole discretion.

7. The use of the leased property is limited to use as a dog park. No other use of the property is allowed under the terms of this lease agreement.

8. This lease agreement is made subject to all state and local laws, regulations and ordinances. Columbia Dog Park shall be responsible for securing any and all permits and licenses necessary for the operation of the dog park.

9. This lease agreement will terminate as follows:

a. Upon thirty (30) days after mailing written notice to Columbia Dog Park by the City.

b. Automatically upon the expiration of the term.

c. In the event Columbia Dog Park violates one or more of the terms and conditions set forth herein and fails to cure such breach within ten (10) days after the mailing of written notice thereof.

d. Upon termination, the City shall cease monthly installment payments to the Columbia Dog Park beginning with the next month's installment.

10. This lease agreement may not be assigned or the property sublet without the written consent of the City.

11. In the event there are any disagreements between the City and Columbia Dog Park with regard to the requirements, specifications or interpretations of this lease agreement. Columbia Dog Park agrees to defer to the interpretations of the City, as from time to time may be made by the City. Ambiguities in the terms of the lease agreement, if any, shall not be constructed against the City.

12. Notices required under this lease agreement shall be hand-delivered or mailed, first class postage prepaid as follows:

City of Columbia
Attn: City Manager
P.O. Box 147
Columbia, SC 29217

Columbia Dog Park
Attn: Tina Heckman
9501 Commonwealth Blvd
Columbia, SC 29209

13. This lease agreement contains the entire understanding of the parties hereto. Any changes, modifications, deletions or additions to this lease agreement are valid only if in writing and signed by the parties hereto.

WITNESSES:

_____

_____

_____

CITY OF COLUMBIA

_____

By: City Manager

Date:_____

_____

_____

COLUMBIA DOG PARK

_____

By: Dog Park Manager

Date:_____

APPROVED AS TO FORM

Legal Department City of Columbia, SC

LEGAL DEPARTMENT DRAFT

ORDINANCE NO.: 2019-096

Authorizing the City Manager to execute an Eighth Amendment to Lease between the City of Columbia and Old Boy Properties, LLC for property consisting of 100± acres in Richland County, South Carolina being a portion of the property formerly owned by Columbia Venture, LLC and Sunday School, LLC

BE IT RESOLVED by the Mayor and City Council this ___ day of _____, 2019, that the City Manager is authorized to execute the attached Eighth Amendment of Hunting Lease between the City of Columbia and Old Boy Properties, LLC, or on a form approved by the City Attorney.

Requested by:

Assistant City Manager Shealy

_____
Mayor

Approved by:

_____
City Manager

Approved as to form:

_____
Deputy City Attorney

ATTEST:

_____
City Clerk

Introduced:
Final Reading:

Last revised: 10/28/2019
19003472

EIGHTH AMENDMENT OF HUNTING LEASE

THIS EIGHTH AMENDMENT OF HUNTING LEASE by and between the City of Columbia (hereinafter called "LESSOR") and Old Boy Properties, LLC, a South Carolina limited liability company (hereinafter called "LESSEE").

WITNESSETH:

WHEREAS, LESSOR and LESSEE entered into that certain Hunting Lease dated June 7, 2011, (the "LEASE");

WHEREAS, LESSOR and LESSEE entered into that certain First Amendment of Hunting Lease effective as of February 21, 2012; and, LESSOR and LESSEE entered into that certain Second Amendment of Hunting Lease effective as of May 21, 2013; and LESSOR and LESSEE entered into that certain Third Amendment of Hunting Lease effective as of May 20, 2014; and LESSOR and LESSEE entered into that certain Fourth Amendment of Hunting Lease effective as of May 26, 2015; and LESSOR and LESSEE entered into that certain Fifth Amendment of Hunting Lease effective as of April 4, 2017; and LESSOR and LESSEE entered into that certain Sixth Amendment of Hunting Lease effective as of May 16, 2017; and LESSOR and LESSEE entered into that certain Seventh Amendment of Hunting Lease effective as of May 20, 2018; and,

WHEREAS, LESSOR and LESSEE have agreed to modify the terms of the LEASE pursuant to the terms set forth herein;

NOW, THEREFORE, for and in consideration of Ten Dollars ($10.00) paid by each of the parties hereto to the other, the receipt and sufficiency of which is hereby acknowledged, and in the further consideration of the agreements contained herein, the parties agree that the LEASE is amended as follows:

Section Two, "Term", shall be amended to the following:

The term of this Hunting Lease shall cover a two-year period commencing on April 1, 2020, and expiring on March 31, 2022.

Except as specifically modified herein, the terms of the LEASE are hereby ratified and confirmed by LESSOR and LESSEE and such terms contained therein shall continue with the same force and effect as if set forth herein and are incorporated herein by reference.

IN WITNESS WHEREOF, the undersigned have executed this Eighth Amendment effective as of the day and year of the last signature hereinbelow.

Witnesses:

_____

_____

CITY OF COLUMBIA

By: _____
Teresa B. Wilson
Its: City Manager
Date: _____

OLD BOY PROPERTIES, LLC

_____

_____

By: _____
B. Deas Manning
Its: _____
Date: _____

APPROVED AS TO FORM

Legal Department City of Columbia, SC

Last revised: 10/28/2019
19003472

ORDINANCE NO.: 2019-097

Consenting to the Inclusion of Property in a Multi-County Industrial/Business Park (PDP Bull Street Apartments, LLC, portions of Richland County TMS #R09113-16-03 and TMS R11501-02-01)

DRAFT

WHEREAS, the City of Columbia, South Carolina ("City"), is a body, politic and corporate located in Richland County, South Carolina ("County"); and,

WHEREAS, through Columbia City Council ("Council"), the City is entitled to exercise all the powers and privileges provided to municipal corporations in the State of South Carolina; and,

WHEREAS, the County and Fairfield County, South Carolina ("Fairfield"), entered into an Agreement for Designation of the I-77 Corridor Regional Industrial Park dated as of April 15, 2003 (the "Original Agreement"), which Original Agreement was amended and restated pursuant to the Amended and Restated Master Agreement dated as of September 1, 2018 (as so amended and restated, the "Park Agreement"); and,

WHEREAS, pursuant to Section 1.02 of the Park Agreement, the boundaries of the park created therein (the "Park") may be enlarged pursuant to ordinances of the respective County Councils of the County and Fairfield County; and,

WHEREAS, the project to be undertaken by PDP Bull Street Apartments, LLC, a North Carolina Limited Liability Company, and/or a related or affiliated entity which may include B-8.1 Canteen, LLC, B-6 Benet Horger, LLC and/or C-7 Trezevant, LLC (both individually and collectively, the "Developer") is a mixed-use commercial real estate development, including fair market rate housing and retail, but which will not include student housing or private dormitories, on contiguous parcels located in the City, as more particularly described on Exhibit A (the "Property," together with the development, "Project"), consisting of total taxable investments in real and personal property of not less than $50,000,000, of which $45,000,000 will be invested by the Company and the remaining $5,000,000 by unrelated third party, including BullStreet Retail, LLC; and,

WHEREAS, the County has agreed to offer a public infrastructure credit to reduce the property taxes due on the Project (as more particularly defined herein, "Credit") pursuant to the terms of Section 4-1-175 of the Code of Laws of South Carolina 1976, as amended ("Credit Act"), and a public infrastructure credit agreement between the County and the Developer for the Property ("Credit Agreement") to provide Credits against certain of the Developer's payments in lieu of taxes with respect to the Project for the purpose of assisting in paying certain costs of designing, acquiring, constructing, improving or expanding public infrastructure (collectively, "Public Infrastructure"); and,

WHEREAS, to grant the Developer the full value of the Credit, the County desires to locate the Project in the Park the County has jointly developed with Fairfield, pursuant to Article VIII, Section 13(D) of the South Carolina Constitution and Section 4-1-170 of the of the Code of Laws of South Carolina, 1976, as amended ("Park Act" and, together with the Credit Act, "Act"); and,

WHEREAS, pursuant to the Act and the Park Agreement, following application of the Credit, the payments in lieu of taxes generated from the Project will be distributed on a pro-rata basis to the

taxing entities in the County that, at the time the Project is included in the Park, are eligible to levy tax millage on the Project; and,

WHEREAS, pursuant to the Act, because the Project is located within the City's geographical borders, the City must consent to the inclusion of the Project within the boundaries of the Park;

WHEREAS, the Project is anticipated to meet the criteria set forth in Resolution No.: R-2019-059 and any amendments thereto, and it is appropriate to consent to including the Project in the Park; NOW, THEREFORE,

BE IT ORDAINED by the Mayor and City Council this __ day of _____, 2019 that the City hereby consents to the inclusion of the Property in the Park, which consent is conditioned upon the following:

1. The County's adoption, by resolution or ordinance, authorizing the inclusion of the Property in the Park and delivery of written notice to the Companion County (as defined in the Park Agreement) thereof, pursuant to Section 1.02 of the Park Agreement; provided, the Property shall not be removed from the Park for so long as the Developer is receiving Credits as a result of inclusion in the Park.

2. The County's approval, execution and delivery of the Credit Agreement related to the Property.

3. The Credit Agreement will provide that (a) the Developer will make payments in lieu of taxes related to the Property ("PILOT") during the term of the Credit Agreement, which PILOT shall be based on property tax assessment of the Property of six percent; (b) the annual PILOT payment payable from the Developer to the County will be subject to reduction by a 50% infrastructure credit (herein defined as the "Credit") to reimburse the Developer's Public Infrastructure costs; (c) the term of the Credit Agreement shall not exceed ten years (unless consented to in writing by the City), beginning with the first full year for which the Developer owes an annual PILOT payment following receipt by the Developer of a Certificate of Occupancy for the Project; (d) in each year during the term of the Credit Agreement, the City will be entitled to receive the portion of the PILOT payment (net of the Credit, as applicable) as provided in the Park Agreement; and (e) the Property will be deemed removed from the Park upon the expiration or earlier termination of the Credit Agreement.

4. Notwithstanding the foregoing, if the Project proceeds in a phased approach, (a) the first phase must meet the criteria established in Resolution No.: R-2019-059 to be eligible for the abatement, (b) the time limit for the Project abatement period as allowed in this Ordinance shall begin the first full year for which the Developer owes a FILOT payment, and the timeline for additional phases shall be for the period of time or abatement amount that remains available on the original period and shall not have a new beginning date.

5. The City Manager is authorized to execute any documents and take any further action as may be reasonably necessary to further the intent of this Ordinance.

6. Approval of this Ordinance does not constitute a development approval, as all regulatory permitting and approval requirements remain in effect, the requirement of such is not altered in any way by the approval of this Ordinance. The Project must proceed with credit application no later than December

31, 2022 in order to be eligible to receive the Credit and must continue to progress forward at a reasonable pace for a project of this magnitude or else the approved tax credit will be repealed by the City.

7. Any prior ordinance, resolution or order, the terms of which are in conflict with this Ordinance, is, only to the extent of that conflict, repealed.

Requested by:

Assistant City Manager Gentry

Approved by:

City Manager

Approved as to form:

Deputy City Attorney

Mayor

ATTEST:

City Clerk

Introduced:
Final Reading:

DRAFT

EXHIBIT A
PROPERTY DESCRIPTION

Parcel C-6

LEGAL DESCRIPTION: ALL that certain piece, parcel or lot of land, situate, lying and being in the City of Columbia, County of Richland, State of South Carolina, shown as Parcel C-6 on a Subdivision Plat prepared for Bull Street Development, LLC, by Jeffrey W. Poole, PLS NO. 18267, Davis & Floyd and dated September 4, 2018 and recorded September 27, 2018 in the Office of the Register of Deeds for Richland County in Book 2338, at page 2806. Said property containing 1.62 Acres, and being described as follows: Commencing at a #5 rebar found in the southern quadrant of the Boyce Street and Freed Street intersection; said #5 rebar found is the Point of Beginning; thence running in a southeasterly direction S19°07'17"E along the Boyce Street westerly right-of-way for a distance of 302.96 feet to a #5 rebar set on said right-of-way; thence turning and running in a southwesterly direction S70°52'43"W along Parcel C-7 belonging to Tellus Delaware, LLC for a distance of 262.78 feet to a P.K. Nail set; thence turning and running in a northwesterly direction N19°07'17"W along Tract 2 of property belonging to South Carolina Department of Mental Health for a distance of 43.35 feet to a P.K. Nail set; thence turning and running in a northeasterly direction N70°56'58"E along Tract 2 of property belonging to South Carolina Department of Mental Health for a distance of 34.79 feet to a P.K. Nail set; thence turning and running in a northwesterly direction N19°03'02"W through the Williams Building and along Tract 2 of property belonging to South Carolina Department of Mental Health for a distance of 259.92 feet to a P.K. Nail set; thence turning and running in a northeasterly direction N70°56'45"E along Parcel A-4 belonging to Tellus Delaware, LLC for a distance of 227.67 feet to a #5 rebar found on the Boyce Street right-of-way in the southern quadrant of the Boyce Street and Freed Street intersection; said point being the Point of Beginning.

Parcel C-7

LEGAL DESCRIPTION: ALL that certain piece, parcel or lot of land, situate, lying and being in the City of Columbia, County of Richland, State of South Carolina, shown as Parcel C-7 on a Subdivision Plat prepared for Bull Street Development, LLC, by Jeffrey W. Poole, PLS NO. 18267, Davis & Floyd and dated November 15, 2017 and recorded December 20, 2017 in the Office of the Register of Deeds for Richland County in Book 2268, at page 2778. Said property containing 3.05 Acres, and being described as follows: Commencing at a #5 rebar set in the northwest quadrant of the Boyce Street and Saunders Street intersection; said #5 rebar set is the Point of Beginning; thence running in a southwesterly direction S70°52'43"W along Tract 2 of property belonging to South Carolina Department of Mental Health for a distance of 286.84 feet to a #5 rebar set; thence turning and running in a northwesterly direction N19°07'17"W along Tract 2 of property belonging to South Carolina Department of Mental Health for a distance of 465.65 feet to a #5 rebar set; thence turning and running in a northeasterly direction N70°52'43"E along Tract 2 of property belonging to South Carolina Department of Mental Health for a distance of 262.78 feet to a #5 rebar set on the Boyce Street westerly right-of-way; thence turning and running in a southeasterly direction S19°07'17"E along the Boyce Street westerly right-of-way for a distance of 15.85 feet to a #5 rebar found on said right-of-way; thence continuing in a southeasterly direction S49°03'15"E along the Boyce Street westerly right-of-way for a distance of 49.17 feet to a #5 rebar found on said right-of-way; thence continuing in a southeasterly direction S19°03'15"E along the Boyce Street westerly right-of-way for a distance of 407.20 feet to a #5 rebar set on said right-of-way; said point being the Point of Beginning.

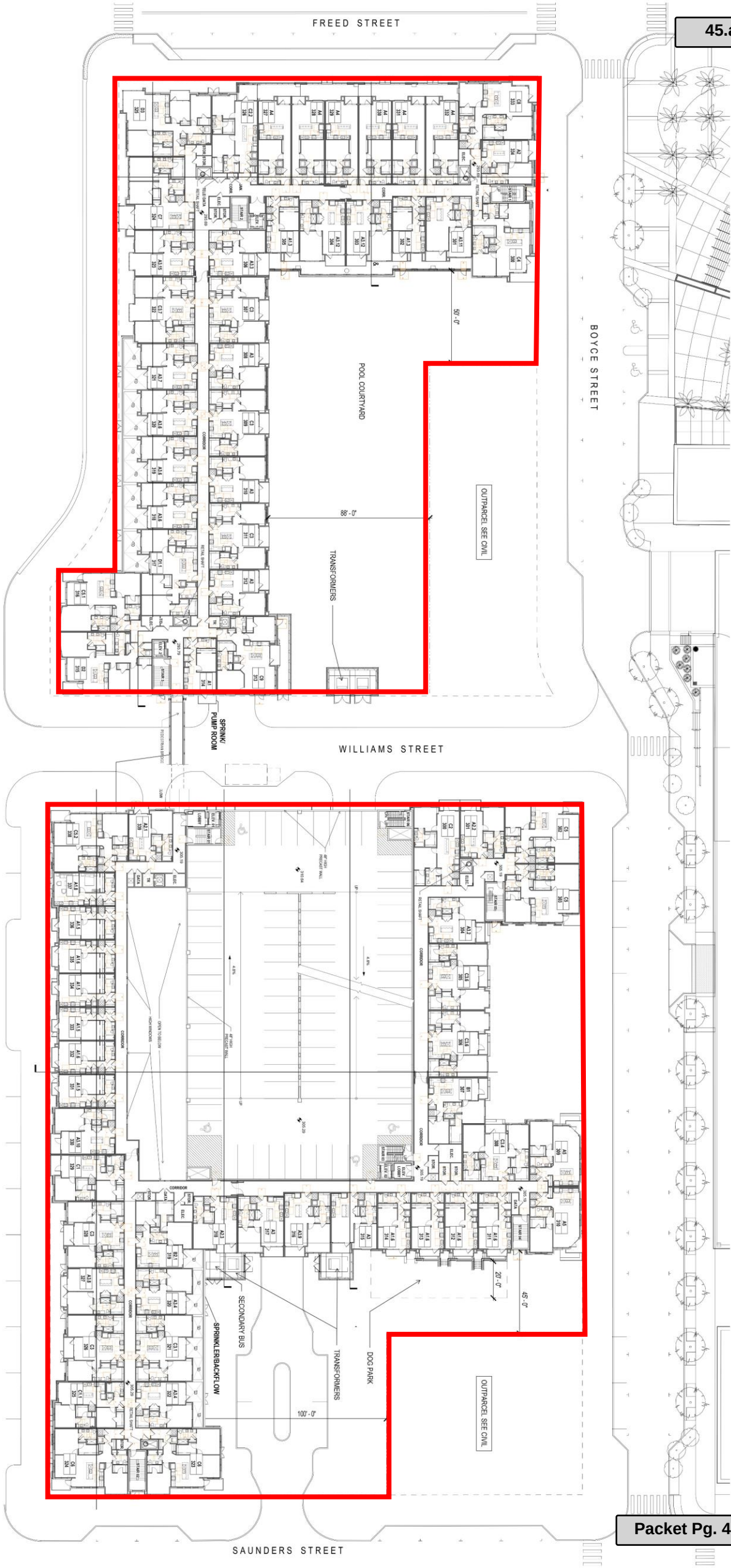
FREED STREET
BOYCE STREET
POOL COURTYARD
50' - 0"
88' - 0"
TRANSFORMERS
OUTPARCEL SEE CIVIL
SPRINK/
PUMP ROOM
WILLIAMS STREET
PICKENS STREET
SECONDARY BUS
SPRINKLER/BACKFLOW
TRANSFORMERS
DOG PARK
20' - 0"
45' - 0"
100' - 0"
OUTPARCEL SEE CIVIL
SAUNDERS STREET

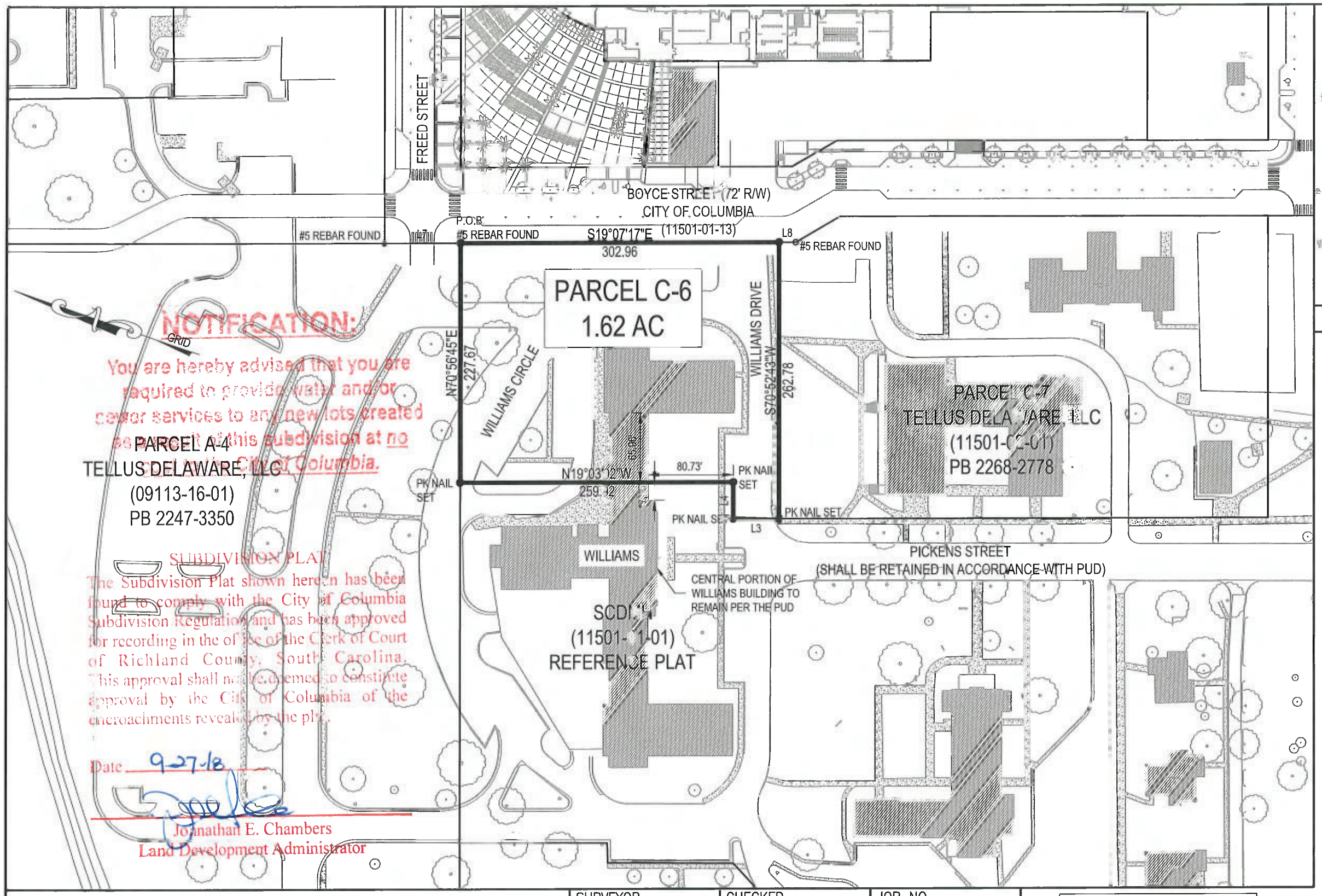

NOTIFICATION:

You are hereby advised that you are required to provide water and/or sewer services to any new lots created as a result of this subdivision at no cost to the City of Columbia.

SUBDIVISION PLAT

The Subdivision Plat shown hereon has been found to comply with the City of Columbia Subdivision Regulations and has been approved for recording in the Office of the Clerk of Court of Richland County, South Carolina. This approval shall not be deemed to constitute approval by the City of Columbia of the encroachments revealed by the plat.

Date 9-27-18

Johnathan E. Chambers
Land Development Administrator

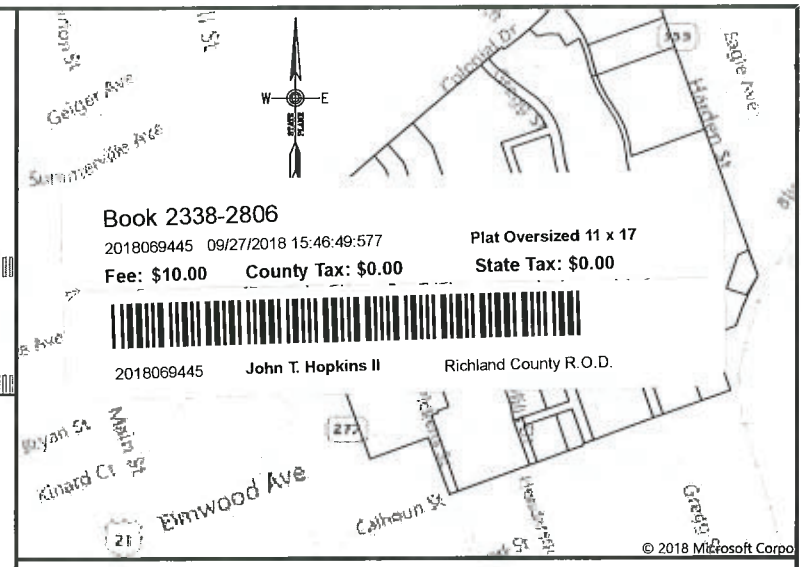

LOCATION MAP N.T.S.

PARCEL SUMMARY:

1. PARCEL C-6 CONTAINING 1.62 ACRES FORMERLY A PORTION OF SOUTH CAROLINA DEPARTMENT OF MENTAL HEALTH; PARENT PARCEL R11501-01-01.

NOTES:

1. ACCORDING TO FEMA FIRM MAP PANEL NUMBER 45079C0092 H LAST REVISED FEBRUARY 20, 2002 AND REVISED BY LETTER OF MAP REVISION CASE NUMBER 11-04-0263P WITH EFFECTIVE DATE OCTOBER 1, 2012. THIS PROPERTY LIES TOTALLY OUTSIDE THE 100-YEAR FLOOD ZONE IN ZONE X.
2. THIS PLAT WAS PREPARED USING CURRENT DEEDS AND PLATS OF RECORD. A TITLE SEARCH WAS NOT PERFORMED OR PROVIDED AS PART OF THIS SURVEY.
3. THIS PROPERTY LIES TOTALLY WITHIN THE CITY LIMITS OF COLUMBIA.
4. ALL PROPERTY CORNERS ARE #5 REBAR SET UNLESS OTHERWISE NOTED.
5. DISTANCES SHOWN ARE BASED ON GROUND DISTANCES AND BEARINGS AS SHOWN ARE REFERENCED TO SC GRID NORTH (NAD 83/2011).

REFERENCE:

1. UNRECORDED PLAT RECORDED FOR SOUTH CAROLINA DEPARTMENT OF MENTAL HEALTH BY COX AND DINKINS, INC. DATE DECEMBER 2, 2008 AND LAST REVISED JULY 15, 2010.

0 100' 200'

SCALE: 1" = 100'

SUBDIVISION PLAT
OF
PARCEL C-6
FOR A PORTION OF TAX MAP NUMBER
R11501-01-01
PREPARED FOR
BULL STREET DEVELOPMENT, LLC
LOCATED IN
CITY OF COLUMBIA
RICHLAND COUNTY, SOUTH CAROLINA
BY

DAVIS & FLOYD
SINCE 1954

I HEREBY STATE THAT TO THE BEST OF MY KNOWLEDGE, INFORMATION, AND BELIEF, THE SURVEY SHOWN HEREON WAS MADE IN ACCORDANCE WITH THE REQUIREMENTS OF THE MINIMUM STANDARDS MANUAL FOR THE PRACTICE OF LAND SURVEYING IN SOUTH CAROLINA, AND MEETS OR EXCEEDS THE REQUIREMENTS FOR A CLASS "A" SURVEY AS SPECIFIED HEREIN.

JEFFREY W. POOLE 864-229-5211

9-27-18

SOUTH CAROLINA CERTIFICATE OF AUTHORIZATION
DAVIS & FLOYD, INC.
No. C00538

SURVEYOR	CHECKED	JOB NO.
A. ANDERSON	J. POOLE	012901.00 PH.0022
DRAWN	APPROVED	DATE
W. BALENTINE	J. POOLE	09/04/2018

NO	REVISED	CHK	DATE

Line Table		
Line #	Direction	Length
L3	N19°07'17"W	43.35
L4	N70°56'58"E	34.79
L7	S19°07'17"E	72.00
L8	S19°07'17"E	15.85

DWG – H:\JOBSODD\12901-00\PLATS\WORKING\2018-09-04 PLATS\CAD\PARCEL C-6 PLAT.DWG, PLOTTED BY: WILLIAM L. BALENTINE, JR., PLOTTED: 27 SEPTEMBER 2018 – 14:06:14

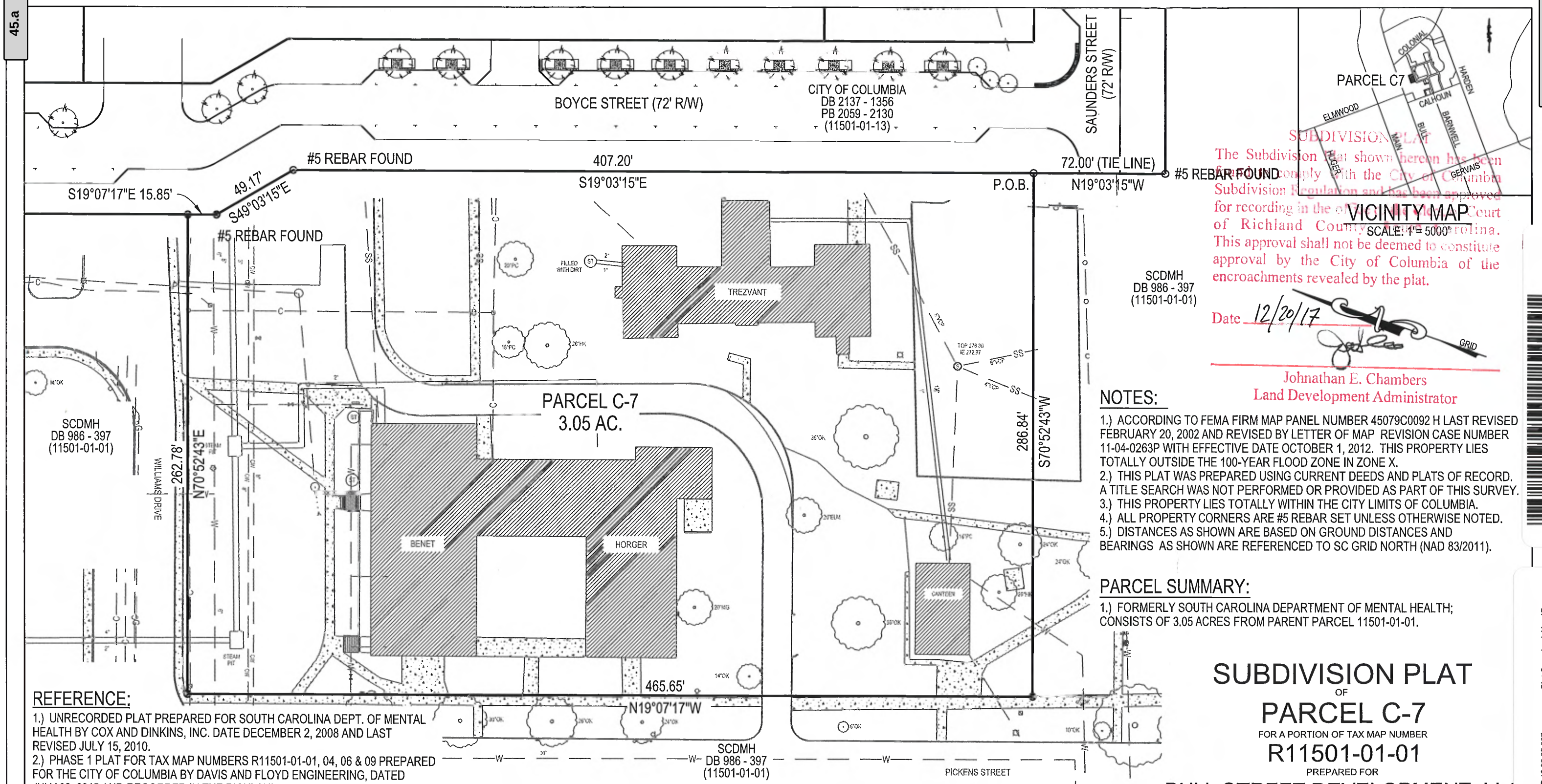

VICINITY MAP

SCALE: 1" = 5000'

SUBDIVISION PLAT
The Subdivision Plat shown hereon has been found to comply with the City of Columbia Subdivision Regulation and has been approved for recording in the office of the Clerk of Court of Richland County, South Carolina. This approval shall not be deemed to constitute approval by the City of Columbia of the encroachments revealed by the plat.

Date 12/20/17

Johnathan E. Chambers
Land Development Administrator

NOTES:

1.) ACCORDING TO FEMA FIRM MAP PANEL NUMBER 45079C0092 H LAST REVISED FEBRUARY 20, 2002 AND REVISED BY LETTER OF MAP REVISION CASE NUMBER 11-04-0263P WITH EFFECTIVE DATE OCTOBER 1, 2012. THIS PROPERTY LIES TOTALLY OUTSIDE THE 100-YEAR FLOOD ZONE IN ZONE X.
2.) THIS PLAT WAS PREPARED USING CURRENT DEEDS AND PLATS OF RECORD. A TITLE SEARCH WAS NOT PERFORMED OR PROVIDED AS PART OF THIS SURVEY.
3.) THIS PROPERTY LIES TOTALLY WITHIN THE CITY LIMITS OF COLUMBIA.
4.) ALL PROPERTY CORNERS ARE #5 REBAR SET UNLESS OTHERWISE NOTED.
5.) DISTANCES AS SHOWN ARE BASED ON GROUND DISTANCES AND BEARINGS AS SHOWN ARE REFERENCED TO SC GRID NORTH (NAD 83/2011).

PARCEL SUMMARY:

1.) FORMERLY SOUTH CAROLINA DEPARTMENT OF MENTAL HEALTH; CONSISTS OF 3.05 ACRES FROM PARENT PARCEL 11501-01-01.

REFERENCE:

1.) UNRECORDED PLAT PREPARED FOR SOUTH CAROLINA DEPT. OF MENTAL HEALTH BY COX AND DINKINS, INC. DATE DECEMBER 2, 2008 AND LAST REVISED JULY 15, 2010.
2.) PHASE 1 PLAT FOR TAX MAP NUMBERS R11501-01-01, 04, 06 & 09 PREPARED FOR THE CITY OF COLUMBIA BY DAVIS AND FLOYD ENGINEERING, DATED JULY 22, 2015 AND RECORDED IN THE RICHLAND COUNTY REGISTER OF DEEDS IN PLAT BOOK 2059 PAGE 2130.

SUBDIVISION PLAT
OF
PARCEL C-7
FOR A PORTION OF TAX MAP NUMBER
R11501-01-01
PREPARED FOR
BULL STREET DEVELOPMENT, LLC
LOCATED IN
CITY OF COLUMBIA
RICHLAND COUNTY, SOUTH CAROLINA
BY
DAVIS & FLOYD
SINCE 1954

0 50 100
SCALE: 1" = 50'

"I hereby state that to the best of my knowledge, information, and belief, the survey shown herein was made in accordance with the requirements of the Minimum Standards Manual for the Practice of Land Surveying in South Carolina, and meets or exceeds the requirements for a Class "A" survey as specified therein."

JEFFREY W. POOLE PLS NO. 18267 864-229-5211 — 12-15-17

SOUTH CAROLINA
DAVIS & FLOYD, INC.
No. C00538
CERTIFICATE OF AUTHORIZATION

SURVEYOR	CHECKED	JOB NO.
A. ANDERSON	J.POOLE	12901.00 PH. 0022
DRAWN	APPROVED	DATE
L.BUCHANAN	J. POOLE	11-15-17

NO.	REVISED	CHKD.	DATE

PLOTTED: 12/13/2017 11:53:43 AM FILE NAME: H:\Jobs0dd\12901-00\Plots\Working\2017-11-15 Parcel C7 Boyce.dgn

John T. Hopkins II Richland County, R.O.D.
2017095529
Book 2268-2778
2017095529 12/20/2017 12:32:25:067
Fee: $10.00 County Tax: $0.00 State Tax: $0.00
Plat Oversized 11 x 17

PUBLIC INFRASTRUCTURE CREDIT AGREEMENT

by and between

RICHLAND COUNTY, SOUTH CAROLINA

and

PDP BULL STREET APARTMENTS, LLC

Effective as of: _____, 2019

PUBLIC INFRASTRUCTURE CREDIT AGREEMENT

This PUBLIC INFRASTRUCTURE CREDIT AGREEMENT, effective as of _____. 2019 ("Agreement"), is by and between RICHLAND COUNTY, SOUTH CAROLINA, a body politic and corporate, and a political subdivision of the State of South Carolina ("County"), and PDP BULL STREET APARTMENTS, LLC, a North Carolina limited liability company (as hereinafter defined "Company" together with the County, "Parties," each, a "Party").

W I T N E S S E T H :

WHEREAS, the County, acting by and through its County Council ("County Council"), is authorized and empowered under and pursuant to the provisions of Article VIII, Section 13(D) of the South Carolina Constitution and the provisions of Title 4, Chapter 1 of the Code of Laws of South Carolina, 1976, as amended (collectively, "Act"), to (i) develop multicounty parks with counties having contiguous borders with the County; and (ii) include property in the multicounty park, which inclusion under the terms of the Act (A) makes such property exempt from *ad valorem* property taxes, and (B) changes the character of the annual receipts from such property to fees-in-lieu of *ad valorem* property taxes in an amount equal to the *ad valorem* taxes that would have been due and payable but for the location of the property in such multicounty park ("Fee Payments");

WHEREAS, the County is further authorized by Section 4-1-175 of the Act to grant credits against Fee Payments ("Public Infrastructure Credit") to pay costs of designing, acquiring, constructing, improving or expanding public infrastructure serving the County (collectively, "Public Infrastructure");

WHEREAS, pursuant to the authority provided in the Act, the County has developed with Fairfield County, South Carolina, the I-77 Corridor Regional Industrial Park ("Park") and executed the "Amended and Restated Master Agreement Governing the I-77 Corridor Regional Industrial Park" dated September 1, 2018 ("Park Agreement"), which governs the operation of the Park;

WHEREAS, PDP Bull Street Apartments, LLC (and/or a related or affiliated entity, which may include B-8.1 Canteen, LLC, B-6 Benet Horger, LLC, and/or C-7 Trezevant, LLC (collectively or alternatively, the "Company")), has committed to establish market rate housing and retail facilities in the County ("Project") on property more particularly identified by Exhibit A ("Land"), consisting of total taxable investment in real and personal property of not less than $50,000,000 of which $45,000,000 will be invested by the Company and the remaining $5,000,000 by unrelated third parties, including BullStreet Retail, LLC;

WHEREAS, by an ordinance enacted on _____, 2019 ("Ordinance"), the County authorized the expansion of the boundaries of the Park and an amendment to the Park Agreement to include the Land and other real and personal property relating to the Project ("Property") in the Park; and

WHEREAS, pursuant to the Ordinance, the County further authorized the execution and delivery of this Agreement to provide Public Infrastructure Credits against the Company's Fee Payments with respect to the Project for the purpose of assisting in paying the costs of certain Public Infrastructure invested by the Company at or in connection with the Project, subject to the terms and conditions below.

NOW, THEREFORE, in consideration of the respective representations and agreements hereinafter contained, the County and the Company agree as follows:

ARTICLE I
REPRESENTATIONS

Section 1.1. ***Representations by the County.*** The County represents to the Company as follows:

(a) The County is a body politic and corporate and a political subdivision of the State of South Carolina;

(b) The County is authorized and empowered by the provisions of the Act to enter into and carry out its obligations under this Agreement;

(c) The County has duly authorized and approved the execution and delivery of this Agreement by adoption of the Ordinance in accordance with the procedural requirements of the Act and any other applicable state law;

(d) The County is not in default of any of its obligations (contractual or otherwise) as a result of entering into and performing its obligations under this Agreement;

(e) The County has approved the inclusion of the Property in the Park; and

(f) Based on representations made by the Company to the County, the County has determined the Project and the Public Infrastructure will enhance the economic development of the County and promote the welfare of its citizens. Therefore, the County is entering into this Agreement for the purpose of promoting the economic development of the County and the welfare of its citizens.

Section 1.2. ***Representations and Covenants by the Company***. The Company represents to the County as follows:

(a) The Company is in good standing under the laws of the State of South Carolina, has power to conduct business in the State of South Carolina and enter into this Agreement, and by proper company action has authorized the officials signing this Agreement to execute and deliver it;

(b) The Company will use commercially reasonable efforts to achieve the Investment Commitment, each as defined below, at the Project;

(c) The Company's execution and delivery of this Agreement, and its compliance with the provisions of this Agreement do not result in a default under any agreement or instrument to which the Company is now a party or by which it is bound; and

(d) The Company covenants to complete the Public Infrastructure in a workmanlike manner and in accordance with all applicable codes and regulations.

ARTICLE II
PUBLIC INFRASTRUCTURE CREDITS

Section 2.1. ***Investment Commitment.*** The Company shall invest not less than $45,000,000 in taxable property at the Project ("Investment Commitment") by the Certification Date, as defined below, with an unrelated third party investing another $5,000,000 in the same property. The Company shall certify to the County achievement of the Investment Commitment by no later than [DATE]_____ ("Certification Date"), by providing documentation to the County sufficient to reflect achievement of the Investment Commitment. If the Company fails to achieve and certify the Investment Commitment by the

Certification Date, the County may terminate this Agreement and, on termination, the Company is no longer entitled to any further benefits under this Agreement. The County has the right to exclude

Section 2.2. ***Public Infrastructure Commitment.***

(a) Prior to receiving the Public Infrastructure Credits under this Agreement, the Company shall make an investment in Public Infrastructure in the County which may be comprised of the following improvements and facilities benefitting the public or dedicated to public use: water sewer, or stormwater improvements, greenspaces, recreation or community facilities, pedestrian or transportation facilities, parking facilities, facade redevelopment, roadway improvements, and energy production or communications technology infrastructure. Public Infrastructure may also include expenditures on the eradication of blight.

(b) The Company has committed to invest in the Public Infrastructure as described on Exhibit B. The Company shall certify its actual investment in the Public Infrastructure to the County by the Certification Date, by providing documentation to the County's Economic Development Department sufficient to reflect the amount invested in the Public Infrastructure. If the Company fails to complete the Public Infrastructure by the Certification Date, then the Company may not be entitled to the full value of the Public Infrastructure Credits as provided by this Agreement.

(c) Following the Certification Date, the County's Economic Development Department shall have 30 days ("Verification Date") to verify the Company's investment in the Public Infrastructure. The County has the right to exclude from the investment in Public Infrastructure certified by the Company any costs the County determines, in its sole discretion, to be ineligible costs. The County may also reject any Public Infrastructure investment as ineligible if the County determines, in its sole discretion, that it has not been completed in a workmanlike manner or in accordance with applicable codes or regulations. The County's Economic Development Department shall provide to the Company, by written notice, the County's determination of the verified amount of investment made by the Company in Public Infrastructure. Failure to provide a written verification shall be deemed to be a determination by the County that all costs certified by the Company are verified as eligible costs.

Section 2.3. ***Public Infrastructure Credits.***

(a) To assist in paying for costs of Public Infrastructure, the County shall provide a Public Infrastructure Credit against certain of the Company's Fee Payments due with respect to the Project, commencing with the first Fee Payment following the Verification Date. The term, amount and calculation of the Public Infrastructure Credit is described in Exhibit B.

(b) For each property tax year in which the Company is entitled to a Public Infrastructure Credit ("Credit Term"), the County shall prepare and issue the Company's annual bill with respect to the Project net of the Public Infrastructure Credit set forth in Section 2.3 (a) ("Net Fee Payment"). Following receipt of the bill, the Company shall timely remit the Net Fee Payment to the County in accordance with applicable law.

(c) THIS AGREEMENT AND THE PUBLIC INFRASTRUCTURE CREDITS PROVIDED BY THIS AGREEMENT ARE LIMITED OBLIGATIONS OF THE COUNTY. THE PUBLIC INFRASTRUCTURE CREDITS ARE DERIVED SOLELY FROM AND TO THE EXTENT OF THE FEE PAYMENTS MADE BY THE COMPANY TO THE COUNTY PURSUANT TO THE ACT AND THE PARK AGREEMENT. THE PUBLIC INFRASTRUCTURE CREDITS DO NOT AND SHALL NOT CONSTITUTE A GENERAL OBLIGATION OF THE COUNTY OR ANY MUNICIPALITY WITHIN THE MEANING OF ANY CONSTITUTIONAL OR STATUTORY LIMITATION AND DO

NOT AND SHALL NOT CONSTITUTE OR GIVE RISE TO A PECUNIARY LIABILITY OF THE COUNTY OR ANY MUNICIPALITY OR A CHARGE AGAINST THE GENERAL CREDIT OR TAXING POWER OF THE COUNTY OR ANY MUNICIPALITY. THE FULL FAITH, CREDIT, AND TAXING POWER OF THE COUNTY OR ANY MUNICIPALITY ARE NOT PLEDGED FOR THE PROVISION OF THE PUBLIC INFRASTRUCTURE CREDITS.

Section 2.4. ***Filings.*** To assist the County in administering the Public Infrastructure Credits, the Company shall, for the Credit Term, prepare and file a separate schedule to the SCDOR PT-100, PT-300 with respect to the Property. Additionally, the Company shall, on or before January 31 of each year during the Credit Term, commencing in January 31, 2020, deliver to the Economic Development Director of the County the information required by the terms of the County's Resolution dated December 12, 2017, which is attached hereto as Exhibit C, as may be amended by subsequent resolution, with respect to the Company.

Section 2.5 ***Cumulative Public Infrastructure Credit.*** The cumulative dollar amount of the Public Infrastructure Credit shall not exceed the amount invested by the Company in Public Infrastructure, as verified, or deemed verified, by the County as of the Verification Date. The County Economic Development Department shall provide the verified investment amount to the County Auditor for purposes of applying the Public Infrastructure Credit in accordance with Section 2.3 of this Agreement.

ARTICLE III
DEFAULTS AND REMEDIES

Section 3.1. ***Events of Default.*** The following are "Events of Default" under this Fee Agreement:

(a) Failure by the Company to make a Net Fee Payment, which failure has not been cured within 30 days following receipt of written notice from the County specifying the delinquency in payment and requesting that it be remedied;

(b) An abandonment or closure of the Project; for purposes of this Agreement, "abandonment or closure of the Project" means failure to place all or a portion of the project in service by December 31, 2023;

(c) A representation or warranty made by the Company which is deemed materially incorrect when deemed made;

(d) Failure by the Company to perform any of the terms, conditions, obligations, or covenants under this Agreement (other than those described in Sections 2.1 and 2.2 and under (a) above), which failure has not been cured within 30 days after written notice from the County to the Company specifying such failure and requesting that it be remedied, unless the Company has instituted corrective action within the 30-day period and is diligently pursuing corrective action until the default is corrected, in which case the 30-day period is extended to include the period during which the Company is diligently pursuing corrective action;

(e) A representation or warranty made by the County which is deemed materially incorrect when deemed made; or

(f) Failure by the County to perform any of the terms, conditions, obligations, or covenants hereunder, which failure has not been cured within 30 days after written notice from the Company to the County specifying such failure and requesting that it be remedied, unless the County has instituted

corrective action within the 30-day period and is diligently pursuing corrective action until the default is corrected, in which case the 30-day period is extended to include the period during which the County is diligently pursuing corrective action.

Section 3.2. ***Remedies on Default.***

(a) If an Event of Default by the Company has occurred and is continuing, then the County may take any one or more of the following remedial actions:

(i) terminate the Agreement; or

(ii) take whatever action at law or in equity may appear necessary or desirable to collect amounts due or otherwise remedy the Event of Default or recover its damages.

(b) If an Event of Default by the County has occurred and is continuing, the Company may take one or more of the following actions:

(i) bring an action for specific enforcement;

(ii) terminate the Agreement; or

(iii) in case of a materially incorrect representation or warranty, take such action as is appropriate, including legal action, to recover its damages, to the extent allowed by law.

Section 3.3. ***Reimbursement of Legal Fees and Other Expenses.*** On the occurrence of an Event of Default, if a Party is required to employ attorneys or incur other reasonable expenses for the collection of payments due under this Agreement or for the enforcement of performance or observance of any obligation or agreement, the prevailing Party is entitled to seek reimbursement of the reasonable fees of such attorneys and such other reasonable expenses so incurred.

Section 3.4. ***Remedies Not Exclusive***. No remedy described in this Agreement is intended to be exclusive of any other remedy or remedies, and each and every such remedy is cumulative and in addition to every other remedy given under this Agreement or existing at law or in equity or by statute.

Section 3.5. ***Nonwaiver.*** A delay or omission by the Company or County to exercise any right or power accruing on an Event of Default does not waive such right or power and is not deemed to be a waiver or acquiescence of the Event of Default. Every power and remedy given to the Company or County by this Agreement may be exercised from time to time and as often as may be deemed expedient.

ARTICLE IV
MISCELLANEOUS

Section 4.1. ***Examination of Records; Confidentiality.***

(a) The County and its authorized agents, at any reasonable time on prior notice, may enter and examine the Project and have access to and examine the Company's books and records relating to the Project for the purposes of (i) identifying the Project; (ii) confirming achievement of the Investment Commitment; (iii) verifying the investment in Public Infrastructure; and (iv) permitting the County to carry out its duties and obligations in its sovereign capacity (such as, without limitation, for such routine health and safety purposes as would be applied to any other manufacturing or commercial facility in the County).

(b) The County acknowledges that the Company may utilize confidential and proprietary processes and materials, services, equipment, trade secrets, and techniques ("Confidential Information") and that disclosure of the Confidential Information could result in substantial economic harm to the Company. The Company may clearly label any Confidential Information delivered to the County pursuant to this Agreement as "Confidential Information." Except as required by law, the County, or any employee, agent, or contractor of the County, shall not disclose or otherwise divulge any labeled Confidential Information to any other person, firm, governmental body or agency. The Company acknowledges that the County is subject to the South Carolina Freedom of Information Act, and, as a result, must disclose certain documents and information on request, absent an exemption. If the County is required to disclose any Confidential Information to a third party, the County will use its best efforts to provide the Company with as much advance notice as is reasonably possible of such disclosure requirement prior to making such disclosure and to cooperate reasonably with any attempts by the Company to obtain judicial or other relief from such disclosure requirement.

Section 4.2. ***Assignment.*** The Company may assign or otherwise transfer any of its rights and interest in this Agreement on prior written consent of the County, which may be given by resolution, and which consent will not be unreasonably withheld.

Section 4.3. ***Provisions of Agreement for Sole Benefit of County and Company.*** Except as otherwise specifically provided in this Agreement, nothing in this Agreement expressed or implied confers on any person or entity other than the County and the Company any right, remedy, or claim under or by reason of this Agreement, this Agreement being intended to be for the sole and exclusive benefit of the County and the Company.

Section 4.4. ***Severability.*** If any provision of this Agreement is declared illegal, invalid, or unenforceable for any reason, the remaining provisions of this Agreement are unimpaired, and the Parties shall reform such illegal, invalid, or unenforceable provision to effectuate most closely the legal, valid, and enforceable intent of this Agreement.

Section 4.5. ***Limitation of Liability.***

(a) The County is not liable to the Company for any costs, expenses, losses, damages, claims or actions in connection with this Agreement, except from amounts received by the County from the Company under this Agreement.

(b) All covenants, stipulations, promises, agreements and obligations of the County contained in this Agreement are binding on members of the County Council or any elected official, officer, agent, servant or employee of the County only in his or her official capacity and not in his or her individual capacity, and no recourse for the payment of any moneys or performance of any of the covenants and agreements under this Agreement or for any claims based on this Agreement may be had against any member of County Council or any elected official, officer, agent, servant or employee of the County except solely in their official capacity.

Section 4.6. ***Indemnification Covenant.***

(a) Except as provided in paragraph (d) below, the Company shall indemnify and save the County, its employees, elected officials, officers and agents (each, an "Indemnified Party") harmless against and from all liability or claims arising from the County's execution of this Agreement, performance of the County's obligations under this Agreement or the administration of its duties pursuant to this Agreement, or otherwise by virtue of the County having entered into this Agreement.

(b) The County is entitled to use counsel of its choice and the Company shall reimburse the County for all of its costs, including attorneys' fees, incurred in connection with the response to or defense against such liability or claims as described in paragraph (a) above. The County shall provide a statement of the costs incurred in the response or defense, and the Company shall pay the County within 30 days of receipt of the statement. The Company may request reasonable documentation evidencing the costs shown on the statement. However, the County is not required to provide any documentation which may be privileged or confidential to evidence the costs.

(c) The County may request the Company to resist or defend against any claim on behalf of an Indemnified Party. On such request, the Company shall resist or defend against such claim on behalf of the Indemnified Party, at the Company's expense. The Company is entitled to use counsel of its choice, manage and control the defense of or response to such claim for the Indemnified Party; provided the Company is not entitled to settle any such claim without the consent of that Indemnified Party.

(d) Notwithstanding anything herein to the contrary, the Company is not required to indemnify any Indemnified Party against or reimburse the County for costs arising from any claim or liability (i) occasioned by the acts of that Indemnified Party, which are unrelated to the execution of this Agreement, performance of the County's obligations under this Agreement, or the administration of its duties under this Agreement, or otherwise by virtue of the County having entered into this Agreement; or (ii) resulting from that Indemnified Party's own negligence, bad faith, fraud, deceit, or willful misconduct.

(e) An Indemnified Party may not avail itself of the indemnification or reimbursement of costs provided in this Section unless it provides the Company with prompt notice, reasonable under the circumstances, of the existence or threat of any claim or liability, including, without limitation, copies of any citations, orders, fines, charges, remediation requests, or other claims or threats of claims, in order to afford the Company notice, reasonable under the circumstances, within which to defend or otherwise respond to a claim.

Section 4.7. ***Notices.*** All notices, certificates, requests, or other communications under this Agreement are sufficiently given and are deemed given, unless otherwise required by this Agreement, when (i) delivered and confirmed by United States first-class, registered mail, postage prepaid or (ii) sent by facsimile, and addressed as follows:

if to the County:	Richland County, South Carolina Attn: Director of Economic Development 2020 Hampton Street Columbia, South Carolina 29204 Phone: 803.576.2043 Fax: 803.576.2137
with a copy to (does not constitute notice):	Parker Poe Adams & Bernstein LLP Attn: Ray E. Jones 1221 Main Street, Suite 1100 (29201) Post Office Box 1509 Columbia, South Carolina 29202 Phone: 803.255.8000 Fax: 803.255.8017

if to the Company:	PDP Bull Street Apartments, LLC Attn: _____ _____ Phone: _____ Fax:_____
with a copy to	Burnet R. Maybank III, Esq. Nexsen Pruet, LLC 1230 Main Street, Suite 700 (29201) Post Office Box 2426 Columbia, South Carolina (29202) Phone: 803.771.8900 Fax: 803.253.8277

The County and the Company may, by notice given under this Section, designate any further or different addresses to which subsequent notices, certificates, requests or other communications shall be sent.

Section 4.8. ***Administrative Fees.*** The Company will reimburse, or cause reimbursement to, the County for the Administration Expenses in the amount of $5,000. The Company will reimburse the County for its Administration Expenses on receipt of a written request from the County or at the County's direction, which request shall include a statement of the amount and nature of the Administration Expense. The Company shall pay the Administration Expenses as set forth in the written request no later than 60 days following receipt of the written request from the County. For purposes of this Section, "Administration Expenses" means the reasonable expenses incurred by the County in the negotiation, approval and implementation of the terms and provisions of this Agreement, including reasonable attorneys' fees. Administration Expenses do not include any costs, expenses, including attorneys' fees, incurred by the County (i) in defending challenges to the Fee Payments or Public Infrastructure Credits brought by third parties or the Company or its affiliates and related entities, or (ii) in connection with matters arising at the request of the Company outside of the immediate scope of this Agreement, including amendments to the terms of this Agreement. The payment by the Company of the County's Administration Expenses shall not be construed as prohibiting the County from engaging, at its discretion, the counsel of the County's choice.

Section 4.9. ***Entire Agreement.*** This Agreement expresses the entire understanding and all agreements of the Parties with each other, and neither Party is bound by any agreement or any representation to the other Party which is not expressly set forth in this Agreement or in certificates delivered in connection with the execution and delivery of this Agreement.

Section 4.10 ***Agreement to Sign Other Documents.*** From time to time, and at the expense of the Company, to the extent any expense is incurred, the County agrees to execute and deliver to the Company such additional instruments as the Company may reasonably request and as are authorized by law and reasonably within the purposes and scope of the Act and this Agreement to effectuate the purposes of this Agreement.

Section 4.11. ***Agreement's Construction.*** Each Party and its counsel have reviewed this Agreement and any rule of construction to the effect that ambiguities are to be resolved against a drafting party does not apply in the interpretation of this Agreement or any amendments or exhibits to this Agreement.

Section 4.12. ***Applicable Law.*** South Carolina law, exclusive of its conflicts of law provisions that would refer the governance of this Agreement to the laws of another jurisdiction, governs this Agreement and all documents executed in connection with this Agreement.

Section 4.13. ***Counterparts.*** This Agreement may be executed in any number of counterparts, and all of the counterparts together constitute one and the same instrument.

Section 4.14. ***Amendments.*** This Agreement may be amended only by written agreement of the Parties.

Section 4.15. ***Waiver.*** Either Party may waive compliance by the other Party with any term or condition of this Agreement but the waiver is valid only if it is in a writing signed by the waiving Party.

Section 4.16. ***Termination.*** Unless first terminated under any other provision of this Agreement, this Agreement terminates on the expiration of the Credit Term and payment by the Company of any outstanding Net Fee Payment due on the Project pursuant to the terms of this Agreement.

Section 4.17. ***Business Day.*** If any action, payment, or notice is, by the terms of this Agreement, required to be taken, made, or given on any Saturday, Sunday, or legal holiday in the jurisdiction in which the Party obligated to act is situated, such action, payment, or notice may be taken, made, or given on the following business day with the same effect as if taken, made or given as required under this Agreement, and no interest will accrue in the interim.

[TWO SIGNATURE PAGES FOLLOW]
[REMAINDER OF PAGE INTENTIONALLY BLANK]

IN WITNESS WHEREOF, Richland County, South Carolina, has caused this Agreement to be executed by the appropriate officials of the County and its corporate seal to be affixed and attested, effective the day and year first above written.

RICHLAND COUNTY, SOUTH CAROLINA

_____
Chair, Richland County Council

(SEAL)
ATTEST:

_____
Clerk to Council, Richland County Council

[SIGNATURE PAGE 1 TO PUBLIC INFRASTRUCTURE CREDIT AGREEMENT]

IN WITNESS WHEREOF, PDP BULL STREET APARTMENTS, LLC has caused this Agreement to be executed by its authorized officer(s), effective the day and year first above written.

PDP BULL STREET APARTMENTS, LLC

By:_____

Name:_____

Its:_____

[SIGNATURE PAGE 2 TO PUBLIC INFRASTRUCTURE CREDIT AGREEMENT]

EXHIBIT A

LAND DESCRIPTION

EXHIBIT B (See Section 2.2)

DESCRIPTION OF PUBLIC INFRASTRUCTURE

The Public Infrastructure includes a parking deck that will provide 345 spaces on 4 levels. The lowest level will provide approximately 74 spaces for the general public visiting The BullStreet District. The remaining spaces will serve the residential and office uses within The BullStreet District. In addition to the parking deck, general infrastructure benefiting the public will be constructed around the perimeter of the project, including sidewalks, plaza areas, site lighting, utility connections, some surface parking, as set forth below.

EXHIBIT C (See Section 2.3)

DESCRIPTION OF PUBLIC INFRASTRUCTURE CREDIT

The County shall provide a 50% Public Infrastructure Credit against the Fee Payments due and owing from the Company to the County in connection with the Project as provided in the Credit Agreement, provided, the cumulative total amount of the Public Infrastructure Credit shall not exceed the Company's Public Infrastructure costs,

The Company is eligible to receive the Public Infrastructure Credit for a period of up to 10 consecutive years, beginning with the first full year for which the Company owes a Fee Payment in connection with the Project following the Verification Date and ending on the earlier of the 10th year or the year in which the cumulative, total amount of the Public Infrastructure Credit equals the Public Infrastructure costs ("Credit Term").

The property is being developed under a Development Agreement between the Company and BullStreet Retail, LLC, with the Company purchasing air rights to the proposed building above the first floor. The Company and BullStreet Retail, LLC agree that the Company will receive the full amount of the Public Infrastructure Credit. The building may be titled in the name of BullStreet Retail, LLC for purposes of the RMC and Tax Assessor's Office, but the credit will be provided against whatever tax bills are issued for the property.

EXHIBIT D (See Section 2.5)
RICHLAND COUNTY RESOLUTION REQUIRING CERTAIN ACCOUNTABILITY PRACTICES CONCERNING ECONOMIC DEVELOPMENT PROJECTS IN THE COUNTY

A RESOLUTION TO AMEND THE DECEMBER 21, 2010, RESOLUTION REQUIRING CERTAIN ACCOUNTABILITY PRACTICES CONCERNING ECONOMIC DEVELOPMENT PROJECTS IN RICHLAND COUNTY

WHEREAS, Richland County Council adopted a resolution dated as of December 21, 2010 ("Prior Resolution"), which requires companies receiving economic development incentives from Richland County, South Carolina ("County") to submit annual reports to the Richland County Economic Development Office; and

WHEREAS, the County desires to make the form of the annual reports submitted by such companies uniform in order to make the substantive information contained in the annual reports more easily tracked and documented by the Richland County Economic Development Office.

NOW, THEREFORE, BE IT RESOLVED by Richland County Council as follows:

Section 1. The County affirms that each company awarded an incentive by the County in exchange for the location or expansion of a facility or facilities within the County shall submit an annual report to the Richland County Economic Development Office by January 31 of each year throughout the term of the incentives.

Section 2. The Richland County Economic Development Office is authorized to create (and from time to time, if necessary, amend or recreate) and make available the form of the annual report; however, such form, shall require, at a minimum, the following information:

a. Name of company;
b. Cumulative capital investment (less any removed investment) to date as a result of the project;
c. Net jobs created to date as a result of the project;

Section 3. A copy of the then-current form of the annual report may be obtained from the following address. The annual report shall likewise be submitted to the following address by the required date.

Richland County Economic Development Office
Attention: Kim Mann
1201 Main Street, Suite 910
Columbia, SC 29201

Section 4. This Resolution amends the Prior Resolution and sets forth the County's requirements with respect to the annual reports to be submitted by each company awarded an incentive by the County as described in Section 1.

Section 5. The substance of this Resolution shall be incorporated into the agreement between the County and each company with respect to the incentives granted by the County to the company.

Section 6. In the event that any company shall fail to submit an annual report, or any portion thereof, such company may be required to return all incentives, or a dollar amount equal thereof, to the County. Such incentives, or the dollar amount equal thereto, shall be paid to the County within 60 days after the date upon which the information was originally due.

RESOLVED: December 12 2017

RICHLAND COUNTY, SOUTH CAROLINA

Chair, Richland County Council

(SEAL)
ATTEST:

Clerk to County Council

LEGAL DEPARTMENT DRAFT

ORDINANCE NO.: 2019-098

Amending the 1998 Code of Ordinances of the City of Columbia, South Carolina, Chapter 2, Administration, Article VII Conviction and Wage History Prohibition in City Employment and by City Contractors and City Vendors, Sec. 2-352 Definitions, Employer

BE IT ORDAINED by the Mayor and Council this ___ day of _____, 2019 that the 1998 Code of Ordinances of the City of Columbia, South Carolina, Chapter 2, Administration, Article VII Conviction and Wage History Prohibition in City Employment and by City Contractors and City Vendors, Sec. 2-352 Definitions, Employer, is amended to read as follows:

Sec. 2-352. Definitions.
Unless otherwise expressly stated, the following terms shall, for the purposes of this Code, have the meanings shown in this section. Where terms are not defined, through the methods authorized by this section, such terms shall have ordinarily accepted meaning such as the context implies.

Adverse action means to refuse to hire, to not promote, to discharge a person, or to revoke an applicant's conditional offer of employment.

Applicant means any person considered for, or who requests to be considered for, employment or any employee considered for, or who requests to be considered for, another employment position, by the employer.

Awarding authority means any department, agency, or office of the City that authorizes a vendor to provide requested goods and/or perform services.

City means the city, department, agency, or office thereof.

Employer means the City~~, private employers and government contractors; and any person regularly employing five or more persons; any person acting as an agent of an employer, directly or indirectly; or any person undertaking for compensation to procure employees or opportunities for employment~~ of Columbia as a municipal corporation.

Employment means any occupation, vocation, job, or work for pay, including temporary or seasonal work, contracted work, contingent work and work through the services of a temporary or other employment agency; or any form of vocational or educational training with or without pay.

To inquire means to ask a job applicant in writing or otherwise.

Vendor means any vendor, contractor, or supplier of goods or services to the City.

Wages means all earnings of an employee, regardless of whether determined on time, task, piece, commission or other method of calculation and including fringe benefits, wage supplements, or other compensation whether payable by the employer from employer funds or from amounts withheld from employee's pay by the employer.

This ordinance shall be effective upon final reading.

Requested by:

Mayor Benjamin

_____
Mayor

Approved by:

_____
City Manager

Approved as to form:

_____
Senior Assistant City Attorney

ATTEST:

_____
City Clerk

Introduced:
Final Reading:

LEGAL DEPARTMENT DRAFT

ORDINANCE NO.: 2019-099

Amending the 1998 Code of Ordinances of the City of Columbia, South Carolina, Chapter 8, Environmental Health and Sanitation, Article II, Nuisances, Sec. 8-31 Nuisance - Definitions (b) Nuisances affecting public health

BE IT ORDAINED by the Mayor and Council this ___ day of _____, 2019, that the 1998 Code of Ordinances of the City of Columbia, South Carolina, Chapter 8, Environmental Health and Sanitation, Article II, Nuisances, Sec. 8-31 Nuisance - Definitions (b) (9), is amended to read as follows

Sec. 8-31. Nuisance-Definitions.

(a) *Definitions*. As used in this article, the following terms shall have the following meanings, unless the context clearly indicates that a different meaning is intended:

Abate means repair, replace, remove, destroy or otherwise remedy the condition in question by such means, in such time, in such a manner and to such an extent as the enforcement officer or hearing committee shall determine to be in the best interest of the public, taking into account all facts and circumstances.

Business days means Monday at 9:00 am through Friday at 5:00 pm.

Citation means a charge or formal written accusation of violation of a municipal, state or federal law, regulation or ordinance, including any violations of the International Property Maintenance Code as adopted by the City of Columbia.

Conviction means a person has been found by a court of competent jurisdiction to have violated a municipal, state of federal law, regulation or ordinance, including any violations of the International Property Maintenance Code as adopted by the City of Columbia.

Delinquent arrearage means any funds or monies owed to the City of Columbia which were due to be paid on a date prior but have not been paid when due, provided, this shall not include arrearages which are the subject of a repayment plan or abatement agreement entered into with the City of Columbia.

Enforcement officer means a law enforcement officer, code enforcement official or city employee or official as may be designated in writing by the city manager or chief of police to enforce the provisions of this division.

Ghost gun means a homemade firearm which was created or assembled without a serial number.

Graffiti means any unauthorized inscription, word, figure, painting or other defacement that is written, marked, etched, scratched, sprayed, drawn, painted, or engraved on or otherwise affixed to any surface of public or private property by any graffiti implement, to the extent that the graffiti was not authorized in advance by the owner or occupant of the property, or, despite advance authorization.

Hearing board means the Property Maintenance Board of Appeals.

Industrial wastes means all liquid and water-borne solid, liquid or gaseous wastes resulting from industrial manufacturing, food processing operation, processing any natural resource or mixture of such wastes with water or domestic sewage.

Notice means a written document informing the citizen of the nature of the violation.

Person means any landlord, property owner, manager, lessee, tenant, or individual, group, association, corporation, partnership, trust, estate or receiver having the capacity to sue or be sued.

Premises mean any building, lot parcel, real estate, or land or portion of land whether improved or unimproved, occupied or unoccupied, including adjacent parking.

Public nuisance means as determined by an enforcement officer based upon the facts and circumstances found after reasonable inquiry, investigation or upon citizen report, those conditions or events which constitute an unreasonable interference with rights of the public in general, and where, in a public place, or where the public congregates, or where the public is likely to come within the range of influence through the senses, a person unlawfully does an act or omits to perform a duty, which act or omission does any one or more of the following:

(1) Annoys, injures, subverts or endangers the public's order, economy, resources, safety, health, welfare, comfort, repose or offends public decency;

(2) Unlawfully interferes with, obstructs or tends to obstruct, or renders dangerous for passage any waters or public places or way;

Structure means anything constructed, built or planted upon, any edifice or building of any kind or any piece of work artificially built up or composed of parts joined together in some definite manner, which structure requires location on the ground or is attached to something having a location on the ground.

(b) Nuisances affecting public health. The following are hereby declared to be nuisances affecting public health:

(1) All decayed or unwholesome food products or food waste not properly contained either inside or outside for more than 24 hours before pickup;

(2) Any violations of the smoking provisions of Division 5 of Chapter 8 of Article IV of the Code of Ordinances of the City of Columbia, provided, however, the remedies under that section are exclusive and remedies contained herein for nuisances are not available;

(3) All pools of stagnant water or vessels holding stagnant water in which mosquitoes can breed, excluding required retention ponds;

(4) Swimming pools which violate any of the requirements of Section 5-1 of the City of Columbia Code of Ordinances;

(5) Any violations of Chapter 4 of the City of Columbia Ordinances as it relates to animal or animal waste;

(6) Any violation of the International Property Maintenance Code, as adopted by the City of Columbia, which related to sewage or leaks of sewage;

(7) Deliberate placement or discharge of into any part of a storm water drainage system of: untreated sewage, sewage solids, process wastewater, refuse, explosive or combustible liquid, solid or gas, oils, greases, industrial water or other polluted water except where a federal, state or local permit for connections, discharge or disposal has been obtained prior to the event; or waters or wastes containing toxic or poisonous wastes to constitute a hazard to humans, plants or animals or to cause corrosion, discoloration or deposition on real or personal property; or any solid or viscous substances in such quantities or of such size capable of causing obstruction to the flow in the storm water drainage system or other interference with the proper operation of the drainage system of the city.

(8) All structures in violation of the International Property Maintenance Code or Chapter 5 of City of Columbia Ordinances, as adopted and all structures, for a period of 90 days, which remain unoccupied and boarded up, and whose exterior finish is destroyed, decayed, dilapidated or deteriorated in violation of the International Property Maintenance Code, as adopted.

(9) Any act, structure, device, or location which is used for the manufacture, assembly, storage, warehousing, ~~transfer~~, distribution or sale of one or more ghost guns.

The rest and remainder of this section shall remain unchanged.

Requested by:

Mayor Benjamin

Approved by:

City Manager

Approved as to form:

Senior Assistant City Attorney

_____
Mayor

ATTEST:

_____
City Clerk

Introduced:
Final Reading:

LEGAL DEPARTMENT DRAFT

ORDINANCE NO.: 2019-107

Consenting to the Inclusion of Property in a Multi-County Industrial/Business Park (Huger Hospitality, LLC, portion of Richland County TMS #08912-13-02)

WHEREAS, the City of Columbia, South Carolina ("City"), is a body, politic and corporate located in Richland County, South Carolina ("County"); and,

WHEREAS, through Columbia City Council ("Council"), the City is entitled to exercise all the powers and privileges provided to municipal corporations in the State of South Carolina; and,

WHEREAS, the County and Fairfield County, South Carolina ("Fairfield"), entered into an Agreement for Designation of the I-77 Corridor Regional Industrial Park dated as of April 15, 2003 (the "Original Agreement"), which Original Agreement was amended and restated pursuant to the Amended and Restated Master Agreement dated as of September 1, 2018 (as so amended and restated, the "Park Agreement"); and,

WHEREAS, pursuant to Section 1.02 of the Park Agreement, the boundaries of the park created therein (the "Park") may be enlarged pursuant to ordinances of the respective County Councils of the County and Fairfield County; and,

WHEREAS, the project to be undertaken by Huger Hospitality, LLC, a South Carolina Limited Liability Corporation (the "Developer") is a mixed-use commercial real estate development, including fair market rate housing and retail, but which will not include student housing or private dormitories, on contiguous parcels located in the City, as more particularly described on Exhibit A (the "Property," together with the development, "Project"), consisting of total taxable investments in real and personal property of not less than $34,000; and,

WHEREAS, the County has agreed to offer a public infrastructure credit to reduce the property taxes due on the Project (as more particularly defined herein, "Credit") pursuant to the terms of Section 4-1-175 of the Code of Laws of South Carolina 1976, as amended ("Credit Act"), and a public infrastructure credit agreement between the County and the Developer for the Property ("Credit Agreement") to provide Credits against certain of the Developer's payments in lieu of taxes with respect to the Project for the purpose of assisting in paying certain costs of designing, acquiring, constructing, improving or expanding public infrastructure (collectively, "Public Infrastructure"); and,

WHEREAS, to grant the Developer the full value of the Credit, the County desires to locate the Project in the Park the County has jointly developed with Fairfield, pursuant to Article VIII, Section 13(D) of the South Carolina Constitution and Section 4-1-170 of the of the Code of Laws of South Carolina, 1976, as amended ("Park Act" and, together with the Credit Act, "Act"); and,

WHEREAS, pursuant to the Act and the Park Agreement, following application of the Credit, the payments in lieu of taxes generated from the Project will be distributed on a pro-rata basis to the taxing entities in the County that, at the time the Project is included in the Park, are eligible to levy tax millage on the Project; and,

WHEREAS, pursuant to the Act, because the Project is located within the City's geographical borders, the City must consent to the inclusion of the Project within the boundaries of the Park;

WHEREAS, the Project is anticipated to meet the criteria set forth in Resolution No.: R-2019-059 and any amendments thereto, and it is appropriate to consent to including the Project in the Park; NOW, THEREFORE,

BE IT ORDAINED by the Mayor and City Council this __ day of _____, 2019 that the City hereby consents to the inclusion of the Property in the Park, which consent is conditioned upon the following:

1. The County's adoption, by resolution or ordinance, authorizing the inclusion of the Property in the Park and delivery of written notice to the Companion County (as defined in the Park Agreement) thereof, pursuant to Section 1.02 of the Park Agreement; provided, the Property shall not be removed from the Park for so long as the Developer is receiving Credits as a result of inclusion in the Park.

2. The County's approval, execution and delivery of the Credit Agreement related to the Property.

3. The Credit Agreement will provide that (a) the Developer will make payments in lieu of taxes related to the Property ("PILOT") during the term of the Credit Agreement, which PILOT shall be based on property tax assessment of the Property of six percent; (b) the annual PILOT payment payable from the Developer to the County will be subject to reduction by a 50% infrastructure credit (herein defined as the "Credit") to reimburse the Developer's Public Infrastructure costs; (c) the term of the Credit Agreement shall not exceed ten years (unless consented to in writing by the City), beginning with the first full year for which the Developer owes an annual PILOT payment following receipt by the Developer of a Certificate of Occupancy for the Project; (d) in each year during the term of the Credit Agreement, the City will be entitled to receive the portion of the PILOT payment (net of the Credit, as applicable) as provided in the Park Agreement; and (e) the Property will be deemed removed from the Park upon the expiration or earlier termination of the Credit Agreement.

4. Notwithstanding the foregoing, if the Project proceeds in a phased approach, (a) the first phase must meet the criteria established in Resolution No.: R-2019-059 to be eligible for the abatement, (b) the time limit for the Project abatement period as allowed in this Ordinance shall begin the first full year for which the Developer owes a FILOT payment, and the timeline for additional phases shall be for the period of time or abatement amount that remains available on the original period and shall not have a new beginning date.

5. The City Manager is authorized to execute any documents and take any further action as may be reasonably necessary to further the intent of this Ordinance.

6. Approval of this Ordinance does not constitute a development approval, as all regulatory permitting and approval requirements remain in effect, the requirement of such is not altered in any way by the approval of this Ordinance. The Project must proceed with credit application no later than December 31, 2022 in order to be eligible to receive the Credit and must continue to progress forward at a reasonable pace for a project of this magnitude or else the approved tax credit will be repealed by the City.

7. Any prior ordinance, resolution or order, the terms of which are in conflict with this Ordinance, is, only to the extent of that conflict, repealed.

Requested by:

Assistant City Manager Gentry

Approved by:

City Manager

Approved as to form:

Deputy City Attorney

Mayor

ATTEST:

City Clerk

Introduced:
Final Reading:

DRAFT

EXHIBIT A
PROPERTY DESCRIPTION

Disclaimer: The plan is included only as an illustration of the intended mixed use development layout and location. The inclusion of this development site plan in no way infers approval of any specific elements of the plan nor does any component of this plan replace or alter existing requirements, if any, that are part of the Kline Redevelopment site.

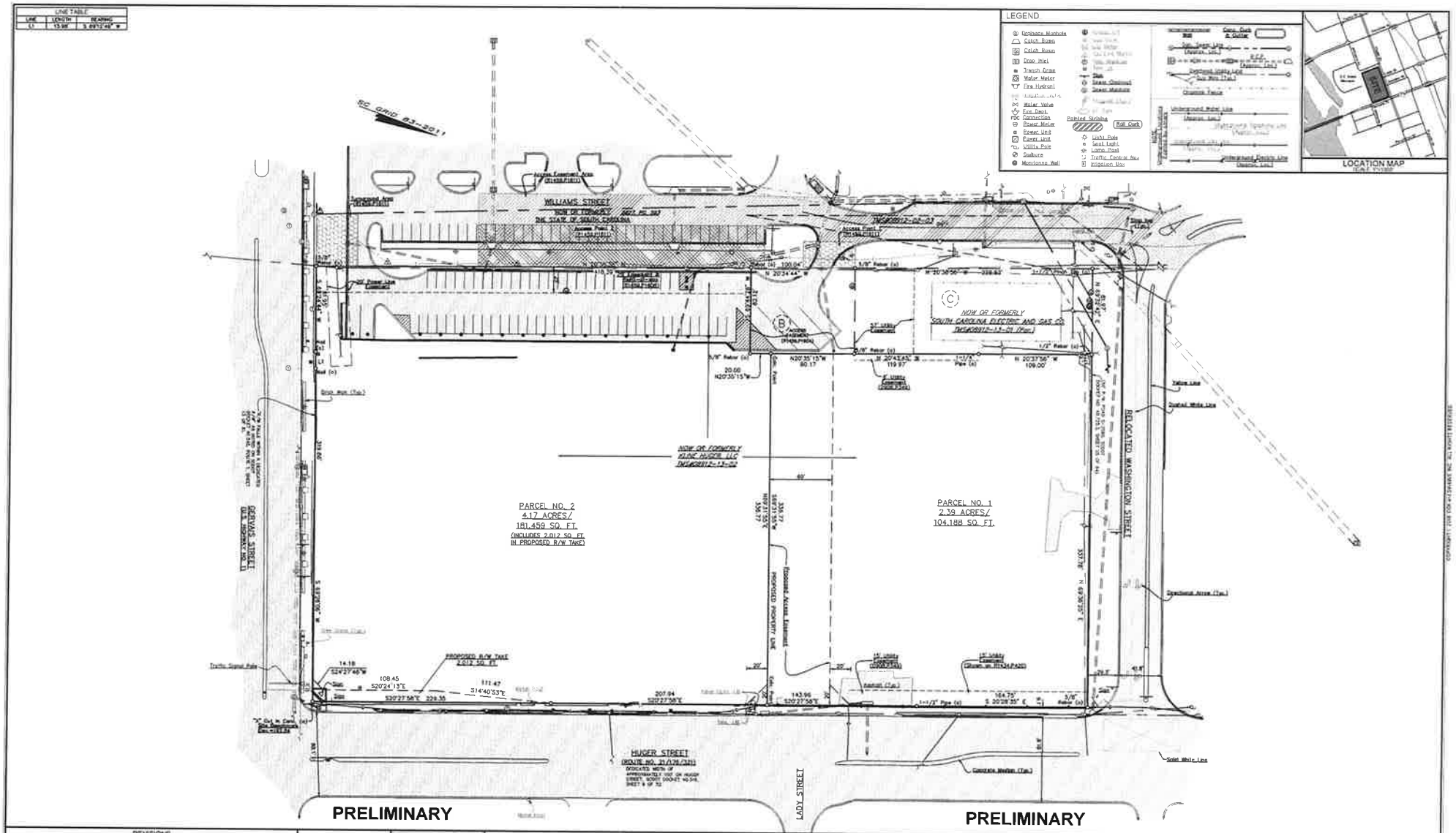

REVISIONS		
NO.	DATE	DESCRIPTION

COX AND DINKINS, INC. No. C00204
CERTIFICATE OF AUTHORIZATION

COX AND DINKINS

EXHIBIT

PREPARED FOR

WINDSOR AUGHTRY COMPANY

RICHLAND COUNTY, COLUMBIA, S.C.

DATE:	SCALE:	TAX MAP NUMBER:	BOOK:	CHK:	SF	NO	PROJ.	BY:
APRIL 30, 2018	1" = 40' (0, 20, 40, 80)	09912-13-02 & -01	E28-1	S	226	23	4102B-01(2018) PRELIM.dwg	20

REFERENCES

1) PLAT PREPARED FOR HHS DEVELOPMENTS, LLC. BY HUSSEY, GAY, BELL & DEYOUNG, INC. DATED DECEMBER 28, 2005. REVISED ON MARCH 12, 2007. AND RECORDED IN THE OFFICE OF THE REGISTER OF DEEDS FOR RICHLAND COUNTY IN BOOK 1434, PAGE 430.
2) A SITE PLAN OF PLANETARIUM/OBSERVATORY/PENDANT CONSTRUCTION-ABC, HSS-9501_GAP.#1. UTILITY, STREAMS & OBSERVATORY DOME PACKAGE. SOUTH CAROLINA STATE MUSEUM. BY CLARK PATTERSON LEE DESIGN PROFESSIONALS, DATED AUGUST 10, 2012.
3) PLAT PREPARED FOR SOUTH CAROLINA ELECTRIC AND GAS, BY SURVEY ONE, LLC. DATED DECEMBER 12, 2006. REVISED MARCH 13, 2007. AND RECORDED IN BOOK 1453, PAGE 1587.
4) BOUNDARY AND TOPOGRAPHIC MAP PREPARED FOR DAVIS PROPERTY GROUP, LLC. BY COX AND DINKINS, INC., DATED JANUARY 6, 2015.

NOTES:

1) THE LOCATION OF OTHER UNDERGROUND UTILITIES AND THEIR SERVICES ARE UNKNOWN.
2) NO ADDITIONAL FIELD WORK HAS BEEN PERFORMED AT THIS TIME.
3) INTERNAL PROPERTY LINE WAS CALCULATED IN THE OFFICE AND NOT LOCATED IN THE FIELD
4) THIS EXHIBIT IS NOT TO BE RECORDED OR USED FOR THE CONVEYANCE OF REAL PROPERTY

COPYRIGHT 2018 COX AND DINKINS, INC. ALL RIGHTS RESERVED

PUBLIC INFRASTRUCTURE CREDIT AGREEMENT

by and between

RICHLAND COUNTY, SOUTH CAROLINA

and

[PROJECT KLINE]

Effective as of: []

PUBLIC INFRASTRUCTURE CREDIT AGREEMENT

This PUBLIC INFRASTRUCTURE CREDIT AGREEMENT, effective as of [DATE] ("Agreement"), is by and between RICHLAND COUNTY, SOUTH CAROLINA, a body politic and corporate, and a political subdivision of the State of South Carolina ("County"), and [PROJECT KLINE], a [STATE] limited liability company ("Company" together with the County, "Parties," each, a "Party").

W I T N E S S E T H :

WHEREAS, the County, acting by and through its County Council ("County Council"), is authorized and empowered under and pursuant to the provisions of Article VIII, Section 13(D) of the South Carolina Constitution and the provisions of Title 4, Chapter 1 of the Code of Laws of South Carolina, 1976, as amended (collectively, "Act"), to (i) develop multicounty parks with counties having contiguous borders with the County; and (ii) include property in the multicounty park, which inclusion under the terms of the Act (A) makes such property exempt from *ad valorem* property taxes, and (B) changes the character of the annual receipts from such property to fees-in-lieu of *ad valorem* property taxes in an amount equal to the *ad valorem* taxes that would have been due and payable but for the location of the property in such multicounty park ("Fee Payments");

WHEREAS, the County is further authorized by Section 4-1-175 of the Act to grant credits against Fee Payments ("Public Infrastructure Credit") to pay costs of designing, acquiring, constructing, improving or expanding public infrastructure serving the County (collectively, "Public Infrastructure");

WHEREAS, pursuant to the authority provided in the Act, the County has developed with Fairfield County, South Carolina, the I-77 Corridor Regional Industrial Park ("Park") and executed the "Amended and Restated Master Agreement Governing the I-77 Corridor Regional Industrial Park" dated September 1, 2018 ("Park Agreement"), which governs the operation of the Park;

WHEREAS, the Company has committed to develop a mixed-use development, consisting of commercial, retail and multi-family housing in the County ("Project") on property more particularly identified by Exhibit A ("Land"), resulting in a taxable investment in real and personal property of not less than $[34,000,000];

WHEREAS, by an ordinance enacted on [DATE] ("Ordinance"), the County authorized the expansion of the boundaries of the Park and an amendment to the Park Agreement to include the Land and other real and personal property relating to the Project ("Property") in the Park; and

WHEREAS, pursuant to the Ordinance, the County further authorized the execution and delivery of this Agreement to provide Public Infrastructure Credits against the Company's Fee Payments with respect to the Project for the purpose of assisting in paying the costs of certain Public Infrastructure invested by the Company at or in connection with the Project, subject to the terms and conditions below.

NOW, THEREFORE, in consideration of the respective representations and agreements hereinafter contained, the County and the Company agree as follows:

ARTICLE I
REPRESENTATIONS

Section 1.1. ***Representations by the County.*** The County represents to the Company as follows:

(a) The County is a body politic and corporate and a political subdivision of the State of South Carolina;

(b) The County is authorized and empowered by the provisions of the Act to enter into and carry out its obligations under this Agreement;

(c) The County has duly authorized and approved the execution and delivery of this Agreement by adoption of the Ordinance in accordance with the procedural requirements of the Act and any other applicable state law;

(d) The County is not in default of any of its obligations (contractual or otherwise) as a result of entering into and performing its obligations under this Agreement;

(e) The County has approved the inclusion of the Property in the Park; and

(f) Based on representations made by the Company to the County, the County has determined the Project and the Public Infrastructure will enhance the economic development of the County and promote the welfare of its citizens. Therefore, the County is entering into this Agreement for the purpose of promoting the economic development of the County and the welfare of its citizens.

Section 1.2. ***Representations and Covenants by the Company***. The Company represents to the County as follows:

(a) The Company is in good standing under the laws of the State of [STATE], has power to conduct business in the State of South Carolina and enter into this Agreement, and by proper company action has authorized the officials signing this Agreement to execute and deliver it;

(b) The Company will use commercially reasonable efforts to achieve the Investment Commitment, each as defined below, at the Project;

(c) The Company's execution and delivery of this Agreement, and its compliance with the provisions of this Agreement do not result in a default under any agreement or instrument to which the Company is now a party or by which it is bound; and

(d) The Company covenants to complete the Public Infrastructure in a workmanlike manner and in accordance with all applicable codes and regulations.

ARTICLE II
PUBLIC INFRASTRUCTURE CREDITS

Section 2.1. ***Investment Commitment.*** The Company shall invest not less than [$34,000,000] in taxable property at the Project ("Investment Commitment") by the Certification Date, as defined below. The Company shall certify to the County achievement of the Investment Commitment by no later than [DATE] ("Certification Date"), by providing documentation to the County sufficient to reflect achievement of the Investment Commitment. If the Company fails to achieve and certify the Investment Commitment by the Certification Date, the County may terminate this Agreement and, on termination, the

Company is no longer entitled to any further benefits under this Agreement. The County has the right to exclude

Section 2.2. ***Public Infrastructure Commitment.***

(a) Prior to receiving the Public Infrastructure Credits under this Agreement, the Company shall make an investment in Public Infrastructure in the County which may be comprised of the following improvements and facilities benefitting the public or dedicated to public use: water sewer, or stormwater improvements, greenspaces, recreation or community facilities, pedestrian or transportation facilities, parking facilities, facade redevelopment, roadway improvements, and energy production or communications technology infrastructure. Public Infrastructure may also include expenditures on the eradication of blight.

(b) The Company has committed to invest in the Public Infrastructure as described on Exhibit B. The Company shall certify its actual investment in the Public Infrastructure to the County by the Certification Date, by providing documentation to the County's Economic Development Department sufficient to reflect the amount invested in the Public Infrastructure. If the Company fails to complete the Public Infrastructure by the Certification Date, then the Company may not be entitled to the full value of the Public Infrastructure Credits as provided by this Agreement.

(c) Following the Certification Date, the County's Economic Development Department shall have 30 days ("Verification Date") to verify the Company's investment in the Public Infrastructure. The County has the right to exclude from the investment in Public Infrastructure certified by the Company any costs the County determines, in its sole discretion, to be ineligible costs. The County may also reject any Public Infrastructure investment as ineligible if the County determines, in its sole discretion, that it has not been completed in a workmanlike manner or in accordance with applicable codes or regulations. The County's Economic Development Department shall provide to the Company, by written notice, the County's determination of the verified amount of investment made by the Company in Public Infrastructure. Failure to provide a written verification shall be deemed to be a determination by the County that all costs certified by the Company are verified as eligible costs.

Section 2.3. ***Public Infrastructure Credits.***

(a) To assist in paying for costs of Public Infrastructure, the County shall provide a Public Infrastructure Credit against certain of the Company's Fee Payments due with respect to the Project, commencing with the first Fee Payment following the Verification Date. The term, amount and calculation of the Public Infrastructure Credit is described in Exhibit B.

(b) For each property tax year in which the Company is entitled to a Public Infrastructure Credit ("Credit Term"), the County shall prepare and issue the Company's annual bill with respect to the Project net of the Public Infrastructure Credit set forth in Section 2.3 (a) ("Net Fee Payment"). Following receipt of the bill, the Company shall timely remit the Net Fee Payment to the County in accordance with applicable law.

(c) THIS AGREEMENT AND THE PUBLIC INFRASTRUCTURE CREDITS PROVIDED BY THIS AGREEMENT ARE LIMITED OBLIGATIONS OF THE COUNTY. THE PUBLIC INFRASTRUCTURE CREDITS ARE DERIVED SOLELY FROM AND TO THE EXTENT OF THE FEE PAYMENTS MADE BY THE COMPANY TO THE COUNTY PURSUANT TO THE ACT AND THE PARK AGREEMENT. THE PUBLIC INFRASTRUCTURE CREDITS DO NOT AND SHALL NOT CONSTITUTE A GENERAL OBLIGATION OF THE COUNTY OR ANY MUNICIPALITY WITHIN THE MEANING OF ANY CONSTITUTIONAL OR STATUTORY LIMITATION AND DO

NOT AND SHALL NOT CONSTITUTE OR GIVE RISE TO A PECUNIARY LIABILITY OF THE COUNTY OR ANY MUNICIPALITY OR A CHARGE AGAINST THE GENERAL CREDIT OR TAXING POWER OF THE COUNTY OR ANY MUNICIPALITY. THE FULL FAITH, CREDIT, AND TAXING POWER OF THE COUNTY OR ANY MUNICIPALITY ARE NOT PLEDGED FOR THE PROVISION OF THE PUBLIC INFRASTRUCTURE CREDITS.

Section 2.4. ***Filings.*** To assist the County in administering the Public Infrastructure Credits, the Company shall, for the Credit Term, prepare and file a separate schedule to the SCDOR PT-100, PT-300 with respect to the Property. Additionally, the Company shall, on or before January 31 of each year during the Credit Term, commencing in January 31, [2019], deliver to the Economic Development Director of the County the information required by the terms of the County's Resolution dated December 12, 2017, which is attached hereto as Exhibit C, as may be amended by subsequent resolution, with respect to the Company.

Section 2.5 ***Cumulative Public Infrastructure Credit.*** The cumulative dollar amount of the Public Infrastructure Credit shall not exceed the amount invested by the Company in Public Infrastructure, as verified, or deemed verified, by the County as of the Verification Date. The County Economic Development Department shall provide the verified investment amount to the County Auditor for purposes of applying the Public Infrastructure Credit in accordance with Section 2.3 of this Agreement.

ARTICLE III
DEFAULTS AND REMEDIES

Section 3.1. ***Events of Default.*** The following are "Events of Default" under this Fee Agreement:

(a) Failure by the Company to make a Net Fee Payment, which failure has not been cured within 30 days following receipt of written notice from the County specifying the delinquency in payment and requesting that it be remedied;

(b) An abandonment or closure of the Project; For purposes of this Agreement, "abandonment or closure of the Project" means [to be tailored to nature of Project];

(c) A representation or warranty made by the Company which is deemed materially incorrect when deemed made;

(d) Failure by the Company to perform any of the terms, conditions, obligations, or covenants under this Agreement (other than those described in Sections 2.1 and 2.2 and under (a) above), which failure has not been cured within 30 days after written notice from the County to the Company specifying such failure and requesting that it be remedied, unless the Company has instituted corrective action within the 30-day period and is diligently pursuing corrective action until the default is corrected, in which case the 30-day period is extended to include the period during which the Company is diligently pursuing corrective action;

(e) A representation or warranty made by the County which is deemed materially incorrect when deemed made; or

(f) Failure by the County to perform any of the terms, conditions, obligations, or covenants hereunder, which failure has not been cured within 30 days after written notice from the Company to the County specifying such failure and requesting that it be remedied, unless the County has instituted corrective action within the 30-day period and is diligently pursuing corrective action until the default is

corrected, in which case the 30-day period is extended to include the period during which the County is diligently pursuing corrective action.

Section 3.2. ***Remedies on Default.***

(a) If an Event of Default by the Company has occurred and is continuing, then the County may take any one or more of the following remedial actions:

(i) terminate the Agreement; or

(ii) take whatever action at law or in equity may appear necessary or desirable to collect amounts due or otherwise remedy the Event of Default or recover its damages.

(b) If an Event of Default by the County has occurred and is continuing, the Company may take one or more of the following actions:

(i) bring an action for specific enforcement;

(ii) terminate the Agreement; or

(iii) in case of a materially incorrect representation or warranty, take such action as is appropriate, including legal action, to recover its damages, to the extent allowed by law.

Section 3.3. ***Reimbursement of Legal Fees and Other Expenses.*** On the occurrence of an Event of Default, if a Party is required to employ attorneys or incur other reasonable expenses for the collection of payments due under this Agreement or for the enforcement of performance or observance of any obligation or agreement, the prevailing Party is entitled to seek reimbursement of the reasonable fees of such attorneys and such other reasonable expenses so incurred.

Section 3.4. ***Remedies Not Exclusive***. No remedy described in this Agreement is intended to be exclusive of any other remedy or remedies, and each and every such remedy is cumulative and in addition to every other remedy given under this Agreement or existing at law or in equity or by statute.

Section 3.5. ***Nonwaiver.*** A delay or omission by the Company or County to exercise any right or power accruing on an Event of Default does not waive such right or power and is not deemed to be a waiver or acquiescence of the Event of Default. Every power and remedy given to the Company or County by this Agreement may be exercised from time to time and as often as may be deemed expedient.

ARTICLE IV
MISCELLANEOUS

Section 4.1. ***Examination of Records; Confidentiality.***

(a) The County and its authorized agents, at any reasonable time on prior notice, may enter and examine the Project and have access to and examine the Company's books and records relating to the Project for the purposes of (i) identifying the Project; (ii) confirming achievement of the Investment Commitment; (iii) verifying the investment in Public Infrastructure; and (iv) permitting the County to carry out its duties and obligations in its sovereign capacity (such as, without limitation, for such routine health and safety purposes as would be applied to any other manufacturing or commercial facility in the County).

(b) The County acknowledges that the Company may utilize confidential and proprietary processes and materials, services, equipment, trade secrets, and techniques ("Confidential Information") and that disclosure of the Confidential Information could result in substantial economic harm to the Company. The Company may clearly label any Confidential Information delivered to the County pursuant to this Agreement as "Confidential Information." Except as required by law, the County, or any employee, agent, or contractor of the County, shall not disclose or otherwise divulge any labeled Confidential Information to any other person, firm, governmental body or agency. The Company acknowledges that the County is subject to the South Carolina Freedom of Information Act, and, as a result, must disclose certain documents and information on request, absent an exemption. If the County is required to disclose any Confidential Information to a third party, the County will use its best efforts to provide the Company with as much advance notice as is reasonably possible of such disclosure requirement prior to making such disclosure and to cooperate reasonably with any attempts by the Company to obtain judicial or other relief from such disclosure requirement.

Section 4.2. ***Assignment.*** The Company may assign or otherwise transfer any of its rights and interest in this Agreement on prior written consent of the County, which may be given by resolution, and which consent will not be unreasonably withheld.

Section 4.3. ***Provisions of Agreement for Sole Benefit of County and Company.*** Except as otherwise specifically provided in this Agreement, nothing in this Agreement expressed or implied confers on any person or entity other than the County and the Company any right, remedy, or claim under or by reason of this Agreement, this Agreement being intended to be for the sole and exclusive benefit of the County and the Company.

Section 4.4. ***Severability.*** If any provision of this Agreement is declared illegal, invalid, or unenforceable for any reason, the remaining provisions of this Agreement are unimpaired, and the Parties shall reform such illegal, invalid, or unenforceable provision to effectuate most closely the legal, valid, and enforceable intent of this Agreement.

Section 4.5. ***Limitation of Liability.***

(a) The County is not liable to the Company for any costs, expenses, losses, damages, claims or actions in connection with this Agreement, except from amounts received by the County from the Company under this Agreement.

(b) All covenants, stipulations, promises, agreements and obligations of the County contained in this Agreement are binding on members of the County Council or any elected official, officer, agent, servant or employee of the County only in his or her official capacity and not in his or her individual capacity, and no recourse for the payment of any moneys or performance of any of the covenants and agreements under this Agreement or for any claims based on this Agreement may be had against any member of County Council or any elected official, officer, agent, servant or employee of the County except solely in their official capacity.

Section 4.6. ***Indemnification Covenant.***

(a) Except as provided in paragraph (d) below, the Company shall indemnify and save the County, its employees, elected officials, officers and agents (each, an "Indemnified Party") harmless against and from all liability or claims arising from the County's execution of this Agreement, performance of the County's obligations under this Agreement or the administration of its duties pursuant to this Agreement, or otherwise by virtue of the County having entered into this Agreement.

(b) The County is entitled to use counsel of its choice and the Company shall reimburse the County for all of its costs, including attorneys' fees, incurred in connection with the response to or defense against such liability or claims as described in paragraph (a) above. The County shall provide a statement of the costs incurred in the response or defense, and the Company shall pay the County within 30 days of receipt of the statement. The Company may request reasonable documentation evidencing the costs shown on the statement. However, the County is not required to provide any documentation which may be privileged or confidential to evidence the costs.

(c) The County may request the Company to resist or defend against any claim on behalf of an Indemnified Party. On such request, the Company shall resist or defend against such claim on behalf of the Indemnified Party, at the Company's expense. The Company is entitled to use counsel of its choice, manage and control the defense of or response to such claim for the Indemnified Party; provided the Company is not entitled to settle any such claim without the consent of that Indemnified Party.

(d) Notwithstanding anything herein to the contrary, the Company is not required to indemnify any Indemnified Party against or reimburse the County for costs arising from any claim or liability (i) occasioned by the acts of that Indemnified Party, which are unrelated to the execution of this Agreement, performance of the County's obligations under this Agreement, or the administration of its duties under this Agreement, or otherwise by virtue of the County having entered into this Agreement; or (ii) resulting from that Indemnified Party's own negligence, bad faith, fraud, deceit, or willful misconduct.

(e) An Indemnified Party may not avail itself of the indemnification or reimbursement of costs provided in this Section unless it provides the Company with prompt notice, reasonable under the circumstances, of the existence or threat of any claim or liability, including, without limitation, copies of any citations, orders, fines, charges, remediation requests, or other claims or threats of claims, in order to afford the Company notice, reasonable under the circumstances, within which to defend or otherwise respond to a claim.

Section 4.7. ***Notices.*** All notices, certificates, requests, or other communications under this Agreement are sufficiently given and are deemed given, unless otherwise required by this Agreement, when (i) delivered and confirmed by United States first-class, registered mail, postage prepaid or (ii) sent by facsimile, and addressed as follows:

if to the County:	Richland County, South Carolina Attn: Director of Economic Development 2020 Hampton Street Columbia, South Carolina 29204 Phone: 803.576.2043 Fax: 803.576.2137
with a copy to (does not constitute notice):	Parker Poe Adams & Bernstein LLP Attn: Ray E. Jones 1221 Main Street, Suite 1100 (29201) Post Office Box 1509 Columbia, South Carolina 29202 Phone: 803.255.8000 Fax: 803.255.8017
if to the Company:	[]

with a copy to []

The County and the Company may, by notice given under this Section, designate any further or different addresses to which subsequent notices, certificates, requests or other communications shall be sent.

Section 4.8. ***Administrative Fees.*** The Company will reimburse, or cause reimbursement to, the County for the Administration Expenses in the amount of $5,000. The Company will reimburse the County for its Administration Expenses on receipt of a written request from the County or at the County's direction, which request shall include a statement of the amount and nature of the Administration Expense. The Company shall pay the Administration Expenses as set forth in the written request no later than 60 days following receipt of the written request from the County. For purposes of this Section, "Administration Expenses" means the reasonable expenses incurred by the County in the negotiation, approval and implementation of the terms and provisions of this Agreement, including reasonable attorneys' fees. Administration Expenses do not include any costs, expenses, including attorneys' fees, incurred by the County (i) in defending challenges to the Fee Payments or Public Infrastructure Credits brought by third parties or the Company or its affiliates and related entities, or (ii) in connection with matters arising at the request of the Company outside of the immediate scope of this Agreement, including amendments to the terms of this Agreement. The payment by the Company of the County's Administration Expenses shall not be construed as prohibiting the County from engaging, at its discretion, the counsel of the County's choice.

Section 4.9. ***Entire Agreement.*** This Agreement expresses the entire understanding and all agreements of the Parties with each other, and neither Party is bound by any agreement or any representation to the other Party which is not expressly set forth in this Agreement or in certificates delivered in connection with the execution and delivery of this Agreement.

Section 4.10 ***Agreement to Sign Other Documents.*** From time to time, and at the expense of the Company, to the extent any expense is incurred, the County agrees to execute and deliver to the Company such additional instruments as the Company may reasonably request and as are authorized by law and reasonably within the purposes and scope of the Act and this Agreement to effectuate the purposes of this Agreement.

Section 4.11. ***Agreement's Construction.*** Each Party and its counsel have reviewed this Agreement and any rule of construction to the effect that ambiguities are to be resolved against a drafting party does not apply in the interpretation of this Agreement or any amendments or exhibits to this Agreement.

Section 4.12. ***Applicable Law.*** South Carolina law, exclusive of its conflicts of law provisions that would refer the governance of this Agreement to the laws of another jurisdiction, governs this Agreement and all documents executed in connection with this Agreement.

Section 4.13. ***Counterparts.*** This Agreement may be executed in any number of counterparts, and all of the counterparts together constitute one and the same instrument.

Section 4.14. ***Amendments.*** This Agreement may be amended only by written agreement of the Parties.

Section 4.15. *Waiver.* Either Party may waive compliance by the other Party with any term or condition of this Agreement but the waiver is valid only if it is in a writing signed by the waiving Party.

Section 4.16. *Termination.* Unless first terminated under any other provision of this Agreement, this Agreement terminates on the expiration of the Credit Term and payment by the Company of any outstanding Net Fee Payment due on the Project pursuant to the terms of this Agreement.

Section 4.17. *Business Day.* If any action, payment, or notice is, by the terms of this Agreement, required to be taken, made, or given on any Saturday, Sunday, or legal holiday in the jurisdiction in which the Party obligated to act is situated, such action, payment, or notice may be taken, made, or given on the following business day with the same effect as if taken, made or given as required under this Agreement, and no interest will accrue in the interim.

[TWO SIGNATURE PAGES FOLLOW]
[REMAINDER OF PAGE INTENTIONALLY BLANK]

IN WITNESS WHEREOF, Richland County, South Carolina, has caused this Agreement to be executed by the appropriate officials of the County and its corporate seal to be affixed and attested, effective the day and year first above written.

RICHLAND COUNTY, SOUTH CAROLINA

_____
Chair, Richland County Council

(SEAL)
ATTEST:

_____
Clerk to Council, Richland County Council

[SIGNATURE PAGE 1 TO PUBLIC INFRASTRUCTURE CREDIT AGREEMENT]

IN WITNESS WHEREOF, [PROJECT KLINE], has caused this Agreement to be executed by its authorized officer(s), effective the day and year first above written.

[PROJECT KLINE]

By:_____

Name:_____

Its:_____

[SIGNATURE PAGE 2 TO PUBLIC INFRASTRUCTURE CREDIT AGREEMENT]

EXHIBIT A

LAND DESCRIPTION

EXHIBIT B (See Section 2.2)

DESCRIPTION OF PUBLIC INFRASTRUCTURE

The Public Infrastructure primarily consists of a parking deck that will serve development and the County. The parking deck will include [102] spaces for general public use and the remaining [307] spaces will serve the commercial, retail and residential uses within the development. Additional Public Infrastructure will consist of sidewalks, lighting, utility infrastructure, and green spaces.

EXHIBIT C (See Section 2.3)

DESCRIPTION OF PUBLIC INFRASTRUCTURE CREDIT

The County shall provide a 50% Public Infrastructure Credit against the Fee Payments due and owing from the Company to the County in connection with the Project; provided, the cumulative total amount of the Public Infrastructure Credit shall not exceed the Company's Public Infrastructure costs.

The Company is eligible to receive the Public Infrastructure Credit for an initial period of up to 10 consecutive years, beginning with the first full year for which the Company owes a Fee Payment in connection with the Project following the Verification Date and ending on the earlier of the 10th year or the year in which the cumulative, total amount of the Public Infrastructure Credit equals the Public Infrastructure costs ("Initial Credit Term").

If, on the 10th year, (a) the Company achieved its Investment Commitment by the Certification Date, (b) the Company has maintained or exceeded its Investment Commitment, (c) there has not been and there is not an Event of Default under the Credit Agreement, and (d) the total, cumulative amount of Public Infrastructure Credits the Company has actually received does not equal the costs of the Public Infrastructure, then the Company may receive a Public Infrastructure Credit against the Fee Payments due and owing from the Company to the County in connection with the Project for an additional period of up to 4 years ("Additional Credit Term"); provided that the Additional Credit Term shall terminate as soon as the total, cumulative value of the Public Infrastructure Credit equals the Public Infrastructure costs.

EXHIBIT D (See Section 2.5)

RICHLAND COUNTY RESOLUTION REQUIRING CERTAIN ACCOUNTABILITY PRACTICES CONCERNING ECONOMIC DEVELOPMENT PROJECTS IN THE COUNTY

A RESOLUTION TO AMEND THE DECEMBER 21, 2010, RESOLUTION REQUIRING CERTAIN ACCOUNTABILITY PRACTICES CONCERNING ECONOMIC DEVELOPMENT PROJECTS IN RICHLAND COUNTY

WHEREAS, Richland County Council adopted a resolution dated as of December 21, 2010 ("Prior Resolution"), which requires companies receiving economic development incentives from Richland County, South Carolina ("County") to submit annual reports to the Richland County Economic Development Office; and

WHEREAS, the County desires to make the form of the annual reports submitted by such companies uniform in order to make the substantive information contained in the annual reports more easily tracked and documented by the Richland County Economic Development Office.

NOW, THEREFORE, BE IT RESOLVED by Richland County Council as follows:

Section 1. The County affirms that each company awarded an incentive by the County in exchange for the location or expansion of a facility or facilities within the County shall submit an annual report to the Richland County Economic Development Office by January 31 of each year throughout the term of the incentives.

Section 2. The Richland County Economic Development Office is authorized to create (and from time to time, if necessary, amend or recreate) and make available the form of the annual report; however, such form, shall require, at a minimum, the following information:

a. Name of company;
b. Cumulative capital investment (less any removed investment) to date as a result of the project;
c. Net jobs created to date as a result of the project;

Section 3. A copy of the then-current form of the annual report may be obtained from the following address. The annual report shall likewise be submitted to the following address by the required date.

Richland County Economic Development Office
Attention: Kim Mann
1201 Main Street, Suite 910
Columbia, SC 29201

Section 4. This Resolution amends the Prior Resolution and sets forth the County's requirements with respect to the annual reports to be submitted by each company awarded an incentive by the County as described in Section 1.

Section 5. The substance of this Resolution shall be incorporated into the agreement between the County and each company with respect to the incentives granted by the County to the company.

Section 6. In the event that any company shall fail to submit an annual report, or any portion thereof, such company may be required to return all incentives, or a dollar amount equal thereof, to the County. Such incentives, or the dollar amount equal thereto, shall be paid to the County within 60 days after the date upon which the information was originally due.

RESOLVED: December 12 2017

RICHLAND COUNTY, SOUTH CAROLINA

Chair, Richland County Council

(SEAL)
ATTEST:

Clerk to County Council

CITY COUNCIL

November 25, 2019 at 6:00pm
City Council Chambers, 3rd Floor, 1737 Main Street, Columbia, SC 29201

ANNEXATION, INTERIM COMPREHENSIVE PLAN MAP AMENDMENT, AND INTERIM ZONING MAP AMENDMENT CASE SUMMARY
118 Woodcreek Ridge Drive; TMS# 25716-02-03

Council District:	4
Proposal:	Request to annex, assign interim land use classification of Urban Edge Residential Small Lot (UER-1) and assign interim zoning of Development District (D-1). The property is currently classified as Neighborhood (Medium Density) and Planned Development District (PDD) by Richland County.
Applicant:	Cascata Development, LLC
Staff Recommendation:	Approval
PC Recommendation:	10/07/2019; Approval (7-0)

Annexation, 1st Reading:	11/25/19: Annex, Assign Interim Land Use and Interim Zoning	PENDING
Annexation, 2nd Reading:	12/03/19: Annex, Assign Interim Land Use and Interim Zoning	PENDING
Comp Plan Amendment: 1st Reading	12/17/19: Confirmation of Land Use Classification	PENDING
Comp Plan Amendment: 2nd Reading	01/07/20: Confirmation of Land Use Classification	PENDING
Map Amendment: 1st Reading	12/17/19: Zoning Confirmation	PENDING
Map Amendment: 2nd Reading	01/07/20: Zoning Confirmation	PENDING

CURRENT PARCEL CHARACTERISTICS/CONDITIONS

Acreage: 9.42 acres
Current Use: Vacant
Proposed Use: Residential
Reason for Annexation: Municipal Services
Urban Service Area: Donut Hole
Current County Land Use: Neighborhood (Medium Density)
Proposed City Land Use: Urban Edge Residential Small Lot (UER-1)
Current County Zoning: PDD
Proposed City Zoning: Planned Unit Development-Residential District (PUD-R)
Census Tract: 114.07

DETERMINATION FOR CITY SERVICES

The following determination is an estimate of the benefits and costs associated with the annexation of the subject property:

Police

We find that the proposed annexation will result in an increased number of calls for service. The estimated cost to serve this development is **approximately $7,000 annually** based on last year's calls for service in nearby residential areas in the City of Columbia.

Fire
The proposed annexation will not result in additional costs or impact services being provided by this department. Annexation would lower the ISO rating of this property to a Class 1 from a Class 2.

Solid Waste
The cost associated with solid waste service for this property is $187.00 annually per household.

Engineering
Because water lines currently exist in this area, the Utilities and Engineering Divisions will not incur any costs associated with this annexation. The property is outside of the City of Columbia sewer service area.

Water Customer Care
The customers on the annexed property will be new customers and will pay water rates approximately **40% lower** than out-of-city customers.

Planning & Development Services
We recommend annexation of this 26-lot single family residential subdivision, located within a Donut Hole as designated in the Urban Service Area plan. The estimated real estate tax revenue generated for the City will be **approximately $36,000 per year**, based on the current tax rate and value estimates.

* Estimated City Tax Revenue is based on **2019 millage** for real property and calculated as: ((Taxable Value × Tax Rate) × City Millage Rate (.0938)). The actual additional taxes paid by the property owner will generally be substantially lower as some millage items do not apply to in-City properties, and an increased Local Option Sales Tax credit factor applies to in-City properties (an additional .002020 for the 2019 tax year).

PLANS, POLICIES, AND LAND USE

Urban Service Area

Subject parcel is in a "Donut Hole" as identified in the Urban Service Area Map

Principles and Goals of the Urban Service Area
The Urban Service Area identifies those areas the City of Columbia wishes to provide with urban services. Primary emphasis will be given to annexing developed areas adjoining the City limits and "islands" of unincorporated territory surrounded by the City. Primary, secondary, and long-range annexation priorities for specific areas may be identified. Secondary areas may include higher value properties which assist the City in achieving a more balanced economic base.

Donut Holes are unincorporated areas that are completely surrounded by the City of Columbia and/or another municipality. These areas pose a number of challenges to the City that can be addressed through annexation. They can often cause inefficiencies in the delivery of services due to confusion about jurisdiction. Also, if the land is in a jurisdiction with a different approach to code enforcement, these areas can negatively impact the quality of life for adjacent City residents. Such inefficiencies and the costs to taxpayers are germane to City and County property both, which results in a greater impact to City residents since they pay City and County taxes.

The Columbia Plan 2018: Comprehensive Plan Land Use Classification

The proposed future land use for the subject property is Urban Edge Residential Small Lot (UER-1) in The Columbia Plan 2018 Future Land Use Map. The property is currently assigned a future land use of Neighborhood (Medium Density) by Richland County.

Urban Edge Residential Small Lot neighborhoods account for a significant portion of the City's existing residential neighborhoods. This development type is appropriate as development on remaining large lots or as redevelopment in the outer areas of Columbia. Most of these developments are relatively modern and occurred after 1970. Urban Edge Residential Small Lot developments generally do not continue the grid and block pattern found in the urban core neighborhoods, but do tend to have a consistently organized internal street network with loops and interconnections. Culs-de-sac are most prominent in this development type.

Primary Types

- Single-family Detached

Tertiary Types

- Single-family Attached
- Two-family
- Three-family
- Multi-family Small
- Small Format Business/Employment (excl. Flex)
- Small Format Civic/Institutional
- Cemeteries & Mausoleums

Existing Neighborhood, Small Area, Community, and/or Corridor Plans

The subject property is not located within the study area of a neighborhood, small area, community, or corridor plan adopted by the City of Columbia or Richland County.

PROPOSED ZONING DISTRICT SUMMARY

The parcel is currently zoned GC by Richland County. Surrounding parcels within the City of Columbia are currently zoned Planned Unit Development-Residential District (PUD-R) to the East and Planned Unit Development-Commercial District (PUD-C) to the South. Surrounding parcels in unincorporated Richland County are currently zoned PDD to the North and West.

The proposed City of Columbia zoning district is Planned Unit Development-Residential District (PUD-R).

Planned Unit Development-Residential District (PUD-R)

(a) Intent. The intent of planned unit development districts is to derive the benefits of efficiency, economy and flexibility by encouraging unified development of large sites, while also obtaining the advantage of creative site design, improved appearance, compatibility of uses, optimum service by community facilities, and better functioning of vehicular access and circulation. It is the intent of this article to allow development of large sites subject to specific regulations concerning permitted uses, but only subject to regulations concerning lot area, building coverage, yard spaces and building height insofar as the city council shall deem appropriate to fulfill the intent of this article, upon presentation of certification from the owners, developers or other parties at interest in the development of such sites that they will adhere to development policies which will fulfill the intent of this article.

(b) Types of districts. Two types of districts accommodating primarily residential or nonresidential uses are created as follows:

(1) PUD-R Planned Unit Development—Residential. The PUD-R district is intended to accommodate residential uses, with nonresidential uses integrated into the design of such districts as secondary uses.

(2) PUD-C Planned Unit Development—Commercial. The PUD-C district is intended to accommodate primarily nonresidential uses, with residential uses integrated into the design of such districts as secondary uses.

(c) Design and planning features. The types of residential dwelling units and the types of nonresidential uses allowed to be established in such districts increase with increasing site size of such districts, based upon the premise that increased site size will allow proper design, including functional interrelations, buffer treatments separating uses with potentially incompatible characteristics of use, design of access patterns, and relationships of

uses within such planned unit developments with uses in adjacent districts. It is the intent of this article that such design and planning features be incorporated properly into any PUD district hereafter created, and that the planning commission and city council shall consider the existence and appropriateness of such features before any amendment to the zoning map is adopted to create such district.

STAFF RECOMMENDATION

Staff recommends that City Council annex the property and assign an interim future land use classification of Urban Edge Residential Small Lot (UER-1) at the time of annexation.

Staff recommends that City Council annex the property and assign interim zoning of Planned Unit Development-Residential District (PUD-R) at the time of annexation.

Future Land Use Map

118 Woodcreek Ridge Drive, TMS# 25716-02-03,
Current FLU: Neighborhood (Medium Density), Proposed FLU: UER-1

Department of Planning & Development Services

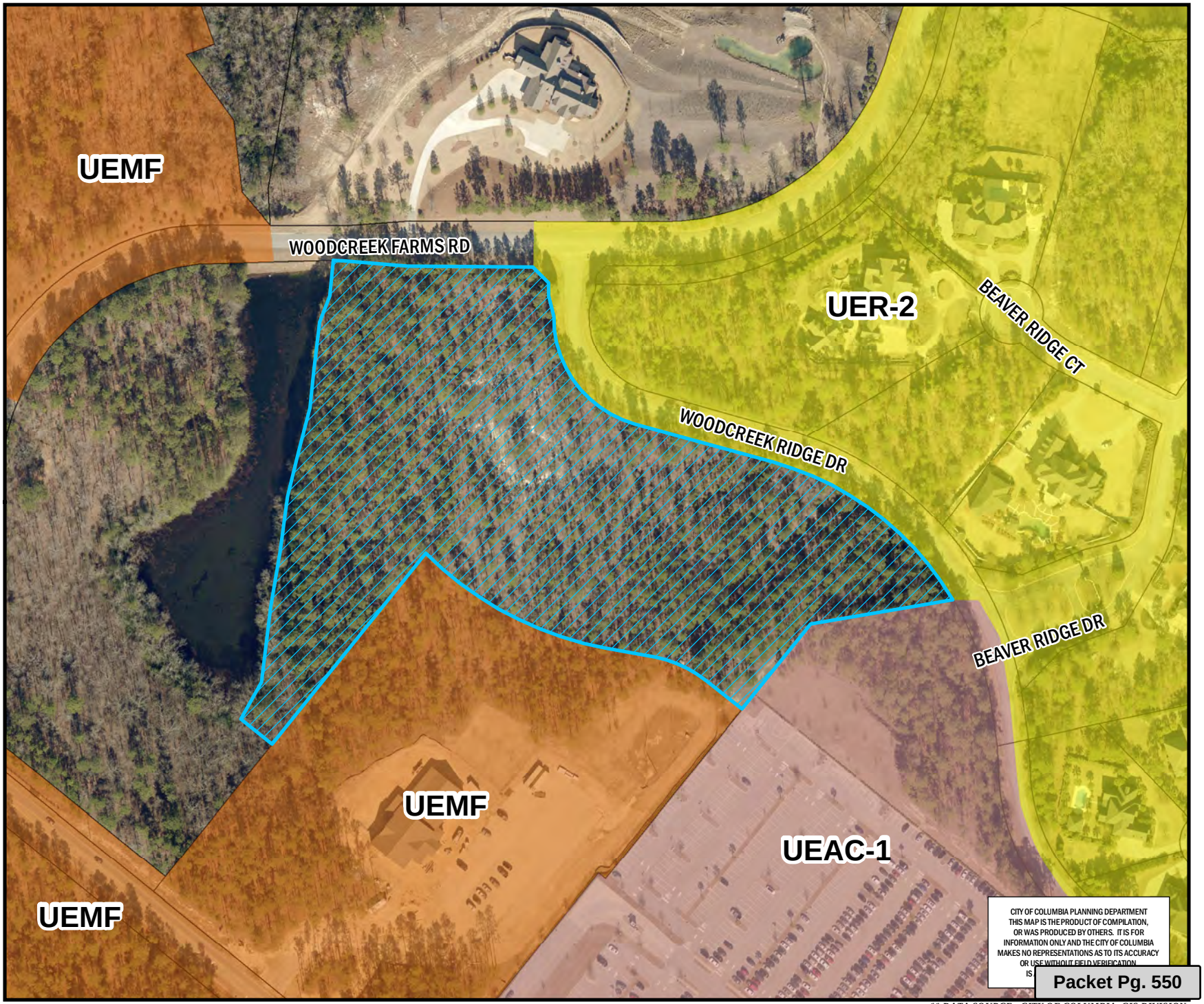

Legend

- CITY LIMITS
- PARCELS

- UCMR-1 - Urban Core Mixed Residential-1
- UCMR-2 - Urban Core Mixed Residential-2
- UCMR-3 - Urban Core Mixed Residential-3
- UEMR - Urban Edge Mixed Residential
- UEMF - Urban Edge Multi-Family
- UCR-1 - Urban Core Residential Small Lot
- UCR-2 - Urban Core Residential Large Lot
- UER-1 - Urban Edge Residential Small Lot
- UER-2 - Urban Edge Residential Large Lot
- UCAC-1 - Urban Core Neighborhood Activity Center
- UCAC-2 - Urban Core Community Activity Center
- UEAC-1 Urban Edge Community Activity Center
- UCAC-3 Urban Core Regional Activity Center
- UEAC-2 - Urban Edge Regional Activity Center
- AC-1 - Neighborhood Activity Corridor
- AC-2 - Community Activity Corridor
- AC-3 - Regional Activity Corridor
- EC - Employment Campus
- IND - Industrial
- TU - Transportation & Utilities
- SD-1 - Sports/Amusement District
- SD-2 - Civic/Institutional Districts
- SD-3 - Central Business District
- SD-4 - Riverbanks Zoo and Garden
- SD-5 - Universities/Colleges
- SD-6 - Fort Jackson

0 50 100 200 Feet

ORIGINAL PREPARATION/DATE:
This map was prepared by:
Shane Shaughnessy
September 19, 2019

We Are Columbia

*** DATA SOURCE - CITY OF COLUMBIA, GIS DIVISION*

Zoning Map

118 Woodcreek Ridge Drive, TMS# 257
Current Zoning: PDD, Proposed Zoning: PUD-R

49.a

Department of Planning & Development Services

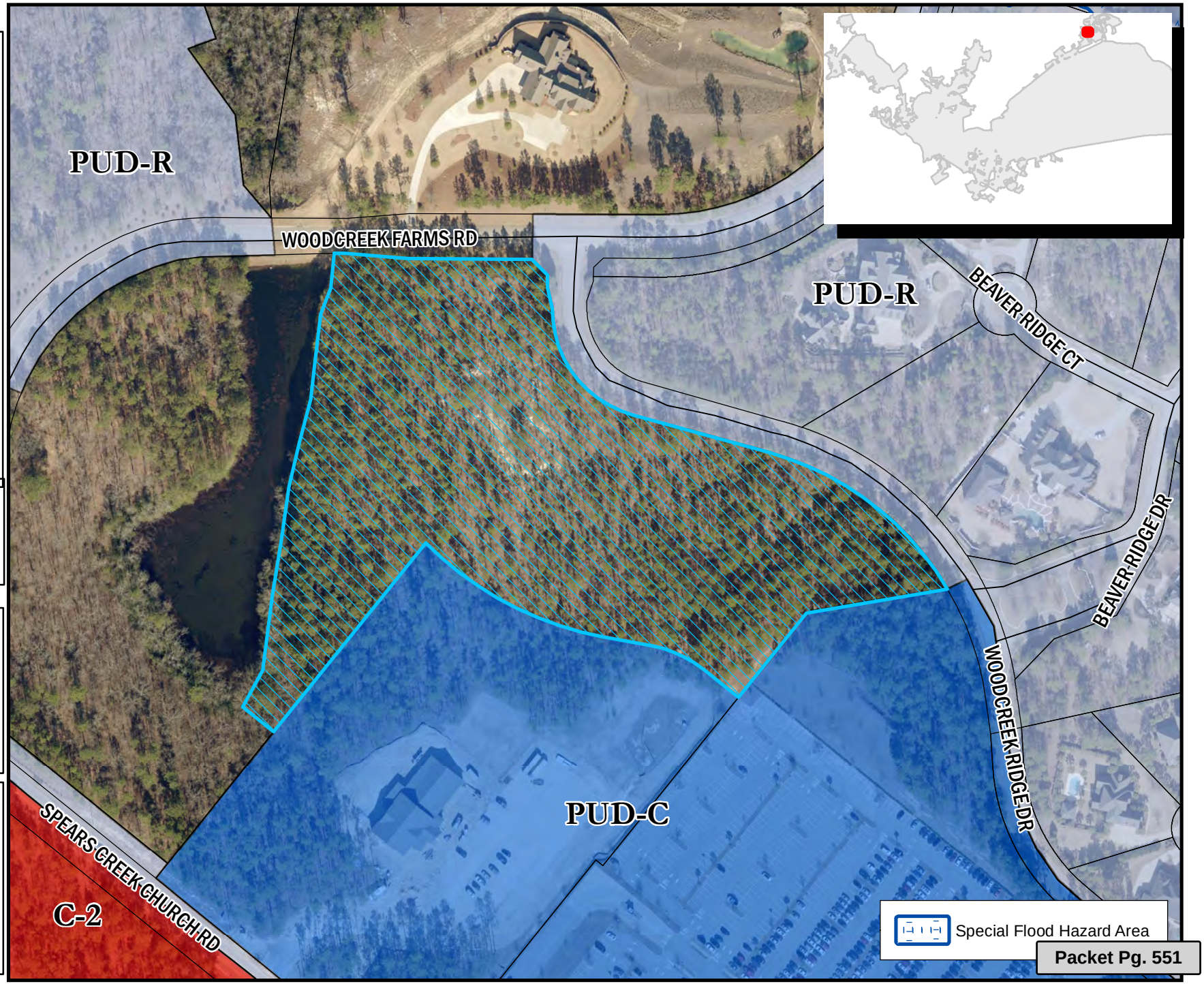

Legend

PARCELS

D-1	C-1
RS-1	C-2
RS-1A	C-3
RS-1B	C-3A
RS-2	C-4
RS-3	C-5
RD	M-1
RD-2	M-2
RG-1	PUD-C
RG-1A	PUD-LS
RG-2	PUD-LS-E
RG-3	PUD-LS-R
UTD	PUD-R
MX-1	OUT OF CITY
MX-2	

0 50 100 200 Feet

ORIGINAL PREPARATION/DATE:
This map was prepared by:

Shane Shaughnessy
September 18, 2019

DISCLAIMER:
The City of Columbia Department of Planning and Development Services data represented on this map or plan is the product of compilation, as produced by others. It is provided for informational purposes only and the City of Columbia makes no representation as to its accuracy. Its use without field verification is at the sole risk of the user.

We Are Columbia

*** DATA SOURCE - CITY OF COLUMBIA, GIS DIVISION*

LEGAL DEPARTMENT DRAFT

ORDINANCE NO.: 2019-090

Annexing 118 Woodcreek Ridge Drive, Richland County TMS# 25716-02-03

WHEREAS, a proper petition has been filed with the City Council by one hundred (100%) percent of the property owners of the within described property under the provisions of South Carolina Ann. Sec. 5-3-150; and,

WHEREAS, it appears to City Council that the annexation of the property would be in the best interest of the property owners and the City of Columbia; NOW, THEREFORE,

BE IT ORDAINED by the Mayor and City Council of the City of Columbia, South Carolina, this ___ day of _____, 2019, that the property described herein is hereby annexed to and becomes a part of the City of Columbia effective immediately. This property shall be assigned interim zoning of Planned Unit Development-Residential District (PUD-R), apportioned to City Council District 4, Census Tract 114.07, contains 9.42 acres, and shall be assigned an interim land use classification of Urban Edge Residential Small Lot (UER-1).

PROPERTY DESCRIPTION: See Attached Exhibit "A"

Richland County TMS NO.: 25716-02-03

Also included in the territory hereby annexed are all contiguous portions of all public rights of way, streets and highways.

Requested by:

Assistant City Manager Gentry

Approved by:

_____
City Manager

Approved as to form:

_____
City Attorney

_____
Mayor

ATTEST:

_____
City Clerk

Introduced:
Final Reading:

Last revised: 11/8/2019
19003260

EXHIBIT "A"
PROPERTY DESCRIPTION
ORDINANCE NO.: 2019-090

All that certain piece, parcel or tract of land, with the improvements thereon, if any, situate, lying and being near the City of Columbia, in the County of Richland, State of South Carolina, containing approximately 9.42 acres and shown as on a Plat prepared for Woodcreek Development, LLC by Belter & Associates, Inc. dated December 9, 2016 and recorded in the Office of the Register of Deeds for Richland County on January 13, 2017 in Book 2179 at page 3669 and being bounded according to said plat as follows: On the North by Woodcreek Farms Road; on the Northeast by Woodcreek Ridge Drive a 50' Private Road; on the East by property now or formerly of WW12 Columbia SC, LLC; on the South and Southeast by property now or formerly of Grace Presbyterian Church, ARP, Inc., on the Southwest and on the West by property now or formerly of Woodcreek Development Partnership.

Last revised: 11/8/2019
19003260

MEMORANDUM

Office of the City Manager

TO: Department Heads

FROM: Teresa Wilson, City Manager

DATE: September 19, 2019

RE: **Property Address:** 118 Woodcreek Ridge Drive
Richland County TMS#: 25716-02-03
Owner(s): Cascata Development, LLC
Current Use: Vacant
Proposed Use: Residential
Current County Land Use: Neighborhood (Medium Density)
Proposed City Land Use: Urban Edge Residential Small Lot (UER-1)
Current County Zoning: Planned Development District (PDD)
Proposed City Zoning: Planned Unit Development – Residential (PUD-R)
Reason for Annexation: Municipal Services; Donut Hole
City Council District: 4
Census Tract: 114.07

The Planning & Development Services advises that the above referenced property has been offered for annexation. Attached, please find a map or drawing reflecting the property. You are directed to forward your comments and/or recommendations regarding the issue of whether to annex or not to Planning & Development Services. Planning & Development Services will compile your comments for City Council consideration.

Planning & Development Services staff will see to it that this matter is placed on the **October 7, 2019** Planning Commission's agenda. Planning & Development Services staff will notify the City Attorney of the Planning Commission's zoning recommendation by forwarding a copy of this form, completed, as soon as the Planning Commission has met.

/atl
Attachments

cc:
Clint Shealy, Assistant City Manager
Jeff Palen, Assistant City Manager/CFO
Aubrey Jenkins, Fire Chief
Joseph Jaco, Director, Utility Operations
Robert Anderson, Public Works Director
Krista Hampton, Planning & Development Services
Lakesha Shannon, Business License Administrator
Greg Williams, Deputy Business License Administrator
Angela Adams, Customer Care Administrator
Jerry Thompson, Building Official
Michelle Brazell, Engineering
Denny Daniels, Engineering
Police Planning & Research
Alfreda Tindal, Richland Co. 911 Addressing Coordinator
Missy Gentry, Assistant City Manager
Teresa Knox, City Attorney
William Holbrook, Police Chief
Dana Higgins, Director, Engineering
Jan Alonso, Finance Director
Gloria Saaed, Community Development Director
George Adams, Fire Marshal
Rachel Bailey, Zoning Administrator
Jacquelyn Richburg, Columbia-Richland 911
David Hatcher, Housing Official
Richland County Solid Waste Collection
John Fellows, Planning Administrator
Tori Salvant, Dev. Center Administrator

Planning Commission Land Use Recommendation: UER-1 (Land Use classification) by 7-0 on 10/7/19 (mm/dd/yyyy).

Planning Commission Zoning Recommendation: PUD-R (Zoning classification) by 7-0 on 10/7/19 (mm/dd/yyyy).

(Signature of Annexation Coordinator)

Future Land Use Map

118 Woodcreek Ridge Drive, TMS# 25716-02-03,
Current FLU: Neighborhood (Medium Density), Proposed FLU: UER-1

Department of Planning & Development Services

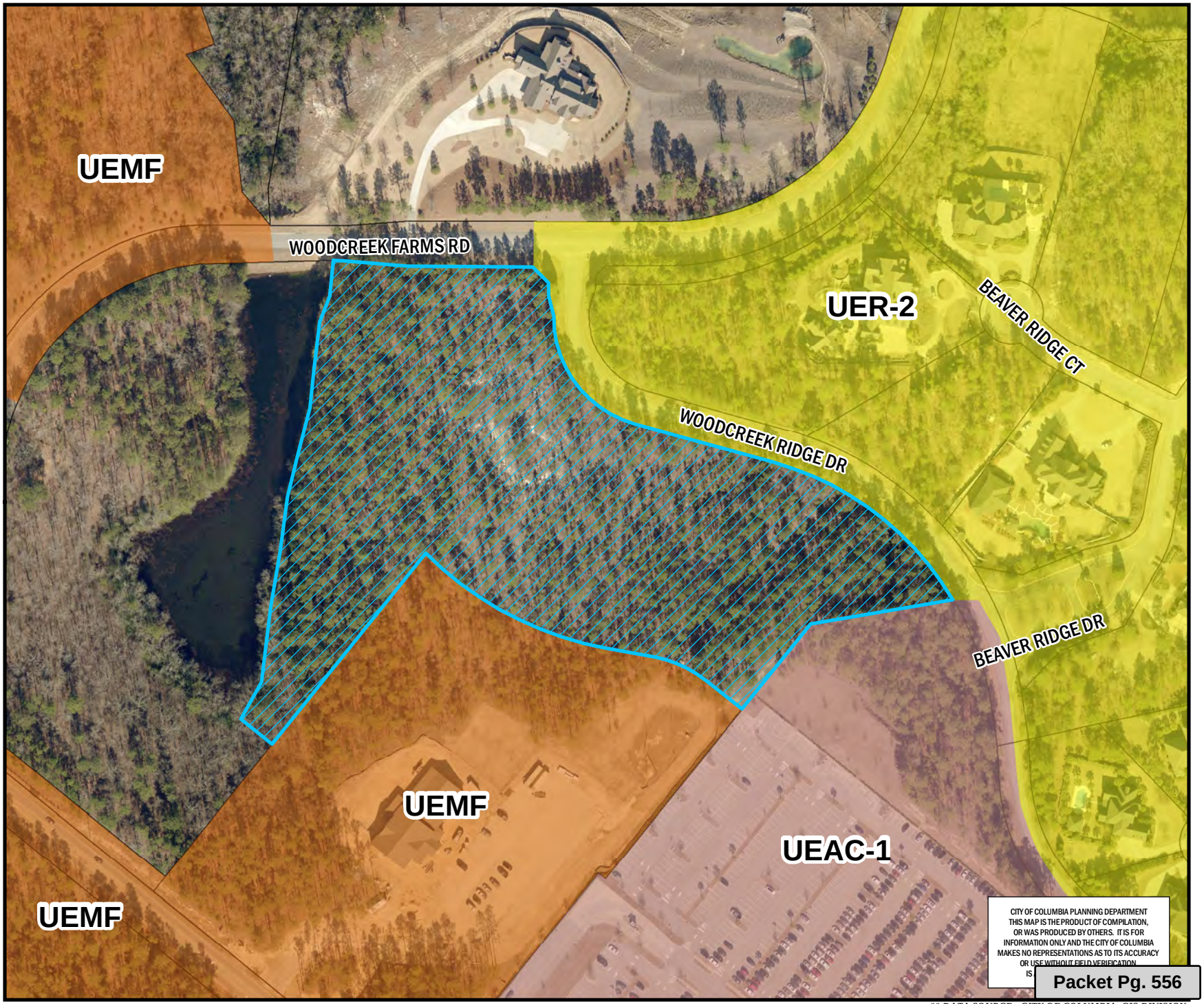

Legend

- CITY LIMITS
- PARCELS

- UCMR-1 - Urban Core Mixed Residential-1
- UCMR-2 - Urban Core Mixed Residential-2
- UCMR-3 - Urban Core Mixed Residential-3
- UEMR - Urban Edge Mixed Residential
- UEMF - Urban Edge Multi-Family
- UCR-1 - Urban Core Residential Small Lot
- UCR-2 - Urban Core Residential Large Lot
- UER-1 - Urban Edge Residential Small Lot
- UER-2 - Urban Edge Residential Large Lot
- UCAC-1 - Urban Core Neighborhood Activity Center
- UCAC-2 - Urban Core Community Activity Center
- UEAC-1 Urban Edge Community Activity Center
- UCAC-3 Urban Core Regional Activity Center
- UEAC-2 - Urban Edge Regional Activity Center
- AC-1 - Neighborhood Activity Corridor
- AC-2 - Community Activity Corridor
- AC-3 - Regional Activity Corridor
- EC - Employment Campus
- IND - Industrial
- TU - Transportation & Utilities
- SD-1 - Sports/Amusement District
- SD-2 - Civic/Institutional Districts
- SD-3 - Central Business District
- SD-4 - Riverbanks Zoo and Garden
- SD-5 - Universities/Colleges
- SD-6 - Fort Jackson

0 50 100 200 Feet

ORIGINAL PREPARATION/DATE:
This map was prepared by:
Shane Shaughnessy
September 19, 2019

We Are Columbia

*** DATA SOURCE - CITY OF COLUMBIA, GIS DIVISION*

Zoning Map

118 Woodcreek Ridge Drive, TMS# 257
Current Zoning: PDD, Proposed Zoning: PUD-R

Department of Planning & Development Services

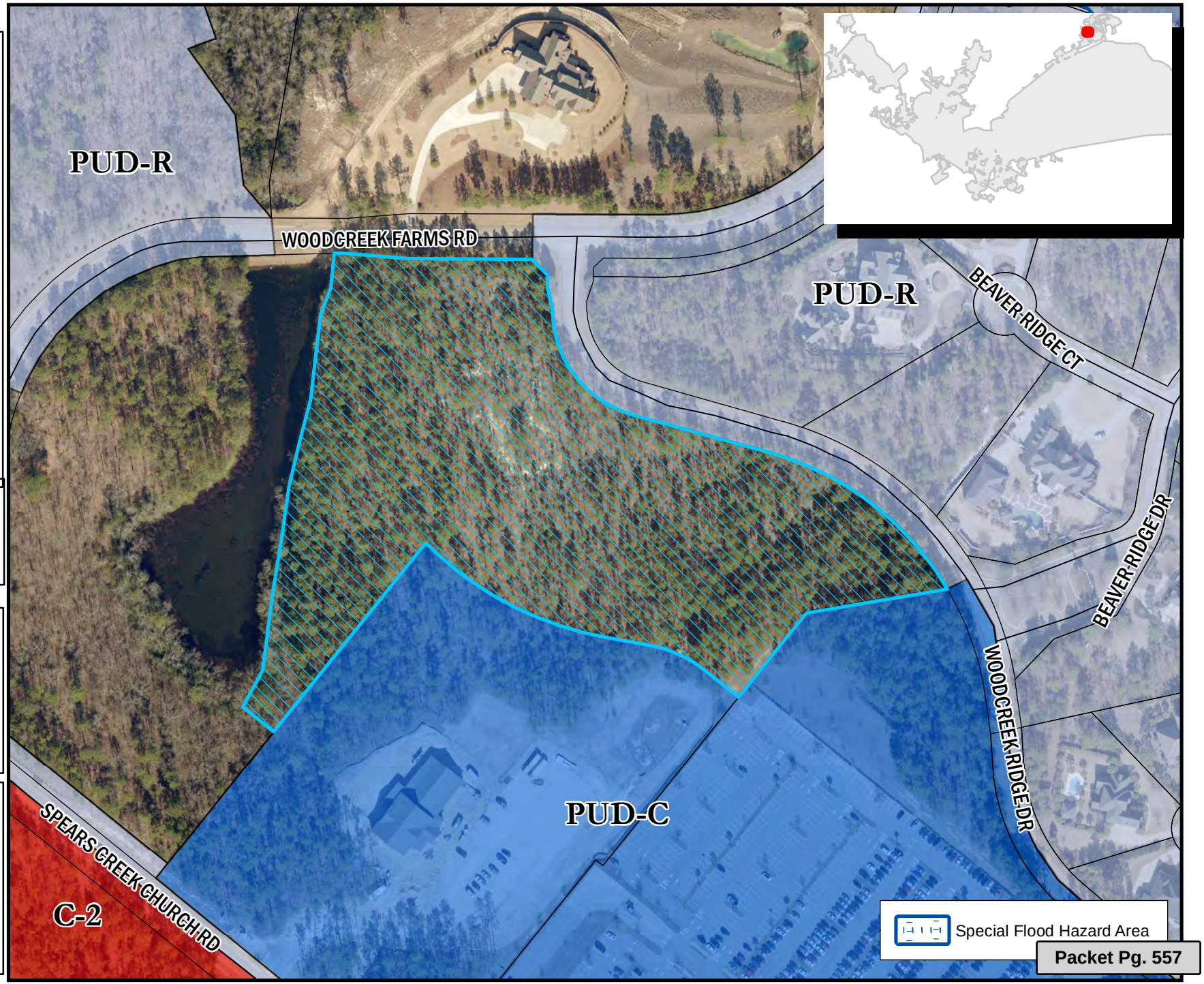

Legend

PARCELS

D-1	C-1
RS-1	C-2
RS-1A	C-3
RS-1B	C-3A
RS-2	C-4
RS-3	C-5
RD	M-1
RD-2	M-2
RG-1	PUD-C
RG-1A	PUD-LS
RG-2	PUD-LS-E
RG-3	PUD-LS-R
UTD	PUD-R
MX-1	OUT OF CITY
MX-2	

0 50 100 200 Feet

ORIGINAL PREPARATION/DATE:
This map was prepared by:

Shane Shaughnessy
September 18, 2019

DISCLAIMER:
The City of Columbia Department of Planning and Development Services data represented on this map or plan is the product of compilation, as produced by others. It is provided for informational purposes only and the City of Columbia makes no representation as to its accuracy. Its use without field verification is at the sole risk of the user.

We Are Columbia

*** DATA SOURCE - CITY OF COLUMBIA, GIS DIVISION*

STATE OF SOUTH CAROLINA)
)
COUNTY OF RICHLAND)

PETITION FOR ANNEXATION

The undersigned, being the owner(s) of the property described below hereby petition(s) the Mayor and City Council for annexation to the City of Columbia, South Carolina pursuant to S.C. Code Ann. Section 5-3-150, 1976, as amended.

Property Description: ALL that certain piece, parcel or tract of land, with the improvements thereon, if any, situate, lying and being near the City of Columbia, in the County of Richland, State of South Carolina, containing approximately 9.42 acres and shown as on a Plat prepared for Woodcreek Development, LLC by Belter & Associates, Inc. dated December 9, 2016 and recorded in the Office of the Register of Deeds for Richland County on January 13, 2017 in Book 2179 at page 3669 and being bounded according to said plat as follows: On the North by Woodcreek Farms Road; on the Northeast by Woodcreek Ridge Drive a 50' Private Road; on the East by property now or formerly of WW12 Columbia SC, LLC; on the South and Southeast by property now or formerly of Grace Presbyterian Church, ARP, Inc., on the Southwest and on the West by property now or formerly of Woodcreek Development Partnership.

Richland County TMS: 25716-02-03

Property Addresses: 118 Woodcreek Ridge Drive

Cascata Development, LLC

BY: _____ Date: 9-17-19

Harold W Pehl Jr
(Print or Type Name)

ITS: Manager

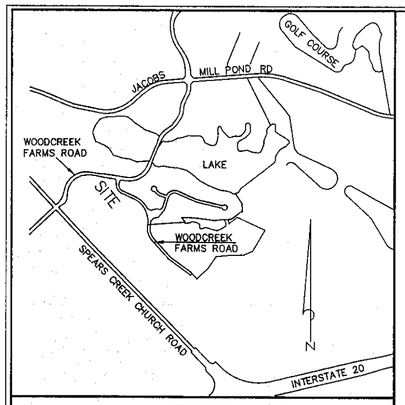

LOCATION MAP
SCALE: 1" = 2000'

100' 50' 0 100'
GRAPHIC SCALE
1" = 100'

S89°33'03"E 16.90'
LAMP POST & ELECTRIC BOX
FIRE HYDRANT
LAMP POST & ELECTRIC BOX
WOODCREEK FARMS ROAD
(0) 5/8" REBAR
WV
(0) 5/8" REBAR
S89°34'22"E 197.57'
N5°49'17"E 56.53'
S84°59'56"E 100.36'
(N) 1/2" REBAR
L2
C4
S74°29'22"E 226.06'
C3
C2
C1
L1
43.59'
N21°48'34"E
N6°58'36"E 74.80'
62.20'
N6°02'10"E
N14°47'23"E 69.47'
74.64'
N13°34'03"E
NEW PROPERTY LINE
88.51'
N7°58'14"E
86.13'
N9°38'02"E
120.38'
N7°16'44"E
N28°59'03"E 66.62'
63.13'
N51°04'46"W
276.97'
S38°56'16"W
109.50'
S38°56'16"W
(0) 1/2" REBAR
(0) 1/2" REBAR
POND
POND
WOODCREEK FARMS AREA D5
"THE RIDGE"
N/F
WOODCREEK DEVELOPMENT PARTNERSHIP
8.96 ACRES
IN THIS PORTION OF T.M.S. 28800-01-10
N/F
WOODCREEK DEVELOPMENT PARTNERSHIP
8.99 ACRES
0.43 ACRES IN ACCESS EASEMENT
TOTAL = 9.42 ACRES
IN THIS PORTION OF T.M.S. 28800-01-10
65.13 ACRES± REMAINING IN TMS 28800-01-10
PROPOSED 50' ACCESS EASEMENT
20' PROPOSED DRAINAGE EASEMENT
S80°28'03"W 227.53'
S39°02'18"W 172.65'
P.O.B.
(N) 1/2" REBAR
(N) 1/2" REBAR
(N) 1/2" REBAR
(N) 1/2" REBAR
L5
C7
L1
WOODCREEK RIDGE DRIVE
(50' PRIVATE ROAD)
BEAVER RIDGE DRIVE
N/F
GRACE PRESBYTERIAN CHURCH, ARP, INC.
TMS 25716-02-02
PLAT RECORD BOOK 1887/3844
SPEARS CREEK CHURCH ROAD (66'R/W) S-40-53
N/F
WW12 COLUMBIA SC, LLC
TMS 25700-05-01
DEED RECORD BOOK 1815/676
PLAT RECORD BOOK 1568/1019
N
MAG. NORTH

PLANNING & DEVELOPMENT SERVICES
RICHLAND COUNTY SOUTH CAROLINA
APPROVED FOR RECORDING
Date 11/21/17
RCT # AD.17-006
Signature

LINE CHART		
LINE	BEARING	LENGTH
L1	N51°17'42"W	71.26'
L2	S13°16'20"E	33.76'
L3	S00°26'01"W	20.00'
L4	S44°33'59"E	35.89'
L5	N79°30'21"W	77.67'

CURVE CHART					
NUM	DELTA	ARC	RADIUS	BEARING	DISTANCE
C1	28°12'39"	90.74'	184.30'	N65°24'02"W	89.83'
C2	34°49'53"	326.41'	536.92'	N62°05'21"W	321.40'
C3	44°05'40"	365.56'	475.00'	S52°25'55"E	356.60'
C4	74°54'05"	228.77'	175.00'	S37°01'02"E	212.83'

NOTE:
ALL IRONS ARE (O) 1/2" REBAR
UNLESS OTHERWISE SHOWN.

SEE U.D.S. FILE G-104

SOUTH CAROLINA
BELTER & ASSOCIATES, INC.
No. C00767
CERTIFICATE OF AUTHORIZATION

FB XX-XXX, PG. XX

BELTER & ASSOCIATES, INC. | 144 FRIARSGATE BOULEVARD, RMO, SOUTH CAROLINA 29063 | TELEPHONE: (803) 732-4004

NO FLOOD STUDY PROVIDED.

EXCEPT AS SPECIFICALLY STATED OR SHOWN ON THIS PLAT, THIS SURVEY DOES NOT PURPORT TO REFLECT OR DISCLOSE ANY OR ALL EASEMENTS OR OTHER MATTERS OF TITLE OR OTHER MATTERS THAT MAY BE APPLICABLE TO OR AFFECT THE SUBJECT REAL ESTATE. FURTHERMORE, THIS SURVEY DOES NOT PURPORT TO REFLECT OR DISCLOSE ANY OR ALL EASEMENTS, SETBACK LINES, RESTRICTIVE COVENANTS, SUBDIVISION REGULATIONS, ZONING OR OTHER LAND USE REGULATIONS, AND AVAILABILITY AND CONDITIONS OF UTILITIES OR OTHER MATTERS OR FACTS THAT AN ACCURATE AND CURRENT TITLE SEARCH MAY DISCLOSE.

ONLY THE LISTED DOCUMENTS SHOWN HEREON WERE CONSIDERED AS A PART OF THIS SURVEY.

THE LOCATIONS OF UNDERGROUND UTILITIES AS SHOWN HEREON ARE BASED ON ABOVE-GROUND VISIBLE STRUCTURES. LOCATIONS OF UNDER-GROUND UTILITIES, STRUCTURES AND/OR EASEMENTS MAY VARY FROM LOCATIONS SHOWN HEREON UNLESS DESIGNATED WITH BEARINGS & DISTANCES.

I HEREBY STATE THAT TO THE BEST OF MY PROFESSIONAL KNOWLEDGE, INFORMATION AND BELIEF, THE SURVEY SHOWN WAS MADE IN ACCORDANCE WITH THE REQUIREMENTS OF THE STANDARDS OF PRACTICE MANUAL FOR SURVEYING IN SOUTH CAROLINA, AND MEETS OR EXCEEDS THE REQUIREMENTS FOR A CLASS B SURVEY AS SPECIFIED THEREIN; AND THAT THERE ARE NO VISIBLE ENCROACHMENTS OR PROJECTIONS OTHER THAN SHOWN.

WILLIAM M. BRASHER SCPLS # 9312

Book 2179-3669
2017002452 01/13/2017 12:05:47:257
Fee: $10.00 County Tax: $0.00
2017002452
John T. Hopkins II
Richland County R.O.D.
Plat Oversized

SCALE: 1" = 100'
SURVEY DATE: 10-17-16
DRAWING DATE: 12-09-16
LOT AREA: 410139 S.F.
9.42 ACRES
RICHLAND COUNTY TMS#
28800 BLOCK 01 LOT 10
JOB NO. 1505035

PLAT PREPARED FOR
WOODCREEK DEVELOPMENT, LLC
NEAR COLUMBIA, S.C. IN RICHLAND COUNTY

VV-076

CITY COUNCIL

November 25, 2019 at 6:00pm
City Council Chambers, 3rd Floor, 1737 Main Street, Columbia, SC 29201

ANNEXATION, INTERIM COMPREHENSIVE PLAN MAP AMENDMENT, AND INTERIM ZONING MAP AMENDMENT CASE SUMMARY
4.91 acres Woodcreek Farms Road and +/- 0.17 acres W/S Woodcreek Farms Road; TMS# 25800-03-47 and 25800-03-28

Council District:	4	
Proposal:	Request recommendation to assign interim land use classification of Neighborhood Activity Corridor (AC-1) and assign interim zoning of Planned Unit Development - Residential District (PUD-R). The property is currently classified as Neighborhood (Medium Density) and zoned PDD by Richland County.	
Applicant:	PD Limited, LLC and Woodcreek Development, LLC	
Staff Recommendation:	Approval	
Staff Recommendation:	Annex, Assign Interim Land Use and Interim Zoning	APPROVE
PC Recommendation:	10/07/2019; Assign Interim Land Use and Interim Zoning	Approval (7-0)

Annexation, 1st Reading:	11/25/19: Annex, Assign Interim Land Use and Interim Zoning	PENDING
Annexation, 2nd Reading:	12/03/19: Annex, Assign Interim Land Use and Interim Zoning	PENDING
Comp Plan Amendment: 1st Reading	12/17/19: Confirmation of Land Use Classification	PENDING
Comp Plan Amendment: 2nd Reading	01/07/20: Confirmation of Land Use Classification	PENDING
Map Amendment: 1st Reading	12/17/19: Zoning Confirmation	PENDING
Map Amendment: 2nd Reading	01/07/20: Zoning Confirmation	PENDING

CURRENT PARCEL CHARACTERISTICS/CONDITIONS

Acreage: 5.08 acres
Current Use: Vacant
Proposed Use: Residential
Reason for Annexation: Municipal Services
Urban Service Area: Donut Hole
Current County Land Use: Neighborhood (Medium Density)
Proposed City Land Use: Neighborhood Activity Corridor (AC-1)
Current County Zoning: PDD
Proposed City Zoning: Planned Unit Development-Residential District (PUD-R)
Census Tract: 114.07

DETERMINATION FOR CITY SERVICES

The following determination is an estimate of the benefits and costs associated with the annexation of the subject property:

Police
We find that the proposed annexation will result in an increased number of calls for service. The estimated cost to serve this development is **approximately $7,500 annually** based on last year's calls for service in nearby residential areas in the City of Columbia.

Fire
The proposed annexation will not result in additional costs or impact services being provided by this department. Annexation would lower the ISO rating of this property to a Class 1 from a Class 2.

Solid Waste
The cost associated with solid waste service for this property is $187.00 annually per household.

Engineering
Because water lines currently exist in this area, the Utilities and Engineering Divisions will not incur any costs associated with this annexation. The property is outside of the City of Columbia sewer service area.

Water Customer Care
The customers on the annexed property will be new customers and will pay water rates approximately **40% lower** than out-of-city customers.

Planning & Development Services
We recommend annexation of this 30-lot single family townhome subdivision, located within a Donut Hole as designated in the Urban Service Area plan. The estimated real estate tax revenue generated for the City will be **approximately $26,500 per year**, based on the current tax rate and value estimates.

* Estimated City Tax Revenue is based on **2019 millage** for real property and calculated as: ((Taxable Value × Tax Rate) × City Millage Rate (.0938)). The actual additional taxes paid by the property owner will generally be substantially lower as some millage items do not apply to in-City properties, and an increased Local Option Sales Tax credit factor applies to in-City properties (an additional .002020 for the 2019 tax year).

PLANS, POLICIES, AND LAND USE

Urban Service Area

Subject parcel is in a "Donut Hole" as identified in the Urban Service Area Map

Principles and Goals of the Urban Service Area
The Urban Service Area identifies those areas the City of Columbia wishes to provide with urban services. Primary emphasis will be given to annexing developed areas adjoining the City limits and "islands" of unincorporated territory surrounded by the City. Primary, secondary, and long-range annexation priorities for specific areas may be identified. Secondary areas may include higher value properties which assist the City in achieving a more balanced economic base.

Donut Holes are unincorporated areas that are completely surrounded by the City of Columbia and/or another municipality. These areas pose a number of challenges to the City that can be addressed through annexation. They can often cause inefficiencies in the delivery of services due to confusion about jurisdiction. Also, if the land is in a jurisdiction with a different approach to code enforcement, these areas can negatively impact the quality of life for adjacent City residents. Such inefficiencies and the costs to taxpayers are germane to City and County property both, which results in a greater impact to City residents since they pay City and County taxes.

The Columbia Plan 2018: Comprehensive Plan Land Use Classification

The proposed future land use for the subject property is Neighborhood Activity Corridor (AC-1) in The Columbia Plan 2018 Future Land Use Map. The property is currently assigned a future land use of Neighborhood (Medium Density) by Richland County.

Neighborhood Activity Corridors are a linear extension of a Neighborhood or Community Activity Center. They contain nearly identical building types and uses to a Neighborhood Activity Center; the primary difference is the configuration of the lots and the lack of an internal subdivision or street network. Uses are built on frontage lots

along principal and minor arterial roadways. They serve surrounding neighborhoods within a one-mile drive or a 15-minute walk, and typically consist of a limited collection of commercial and service uses.

Primary Types

- Small Format Business/Employment (excl. Flex)
- Small Multi-family Mixed-use

Secondary Types

- Civic/Institutional
- Multi-family Small and Medium
- Single-family Attached

Tertiary Types

- Cemeteries & Mausoleums
- Parking Structures and Lots

Existing Neighborhood, Small Area, Community, and/or Corridor Plans

The subject property is not located within the study area of a neighborhood, small area, community, or corridor plan adopted by the City of Columbia or Richland County.

PROPOSED ZONING DISTRICT SUMMARY

The parcel is currently zoned PDD by Richland County. Surrounding parcels within the City of Columbia are currently zoned Planned Unit Development-Residential District (PUD-R) to the North, East, and South. Surrounding parcels in unincorporated Richland County are currently RU to the West.

The proposed City of Columbia zoning district is Planned Unit Development-Residential District (PUD-R).

Planned Unit Development-Residential District (PUD-R)

(a) Intent. The intent of planned unit development districts is to derive the benefits of efficiency, economy and flexibility by encouraging unified development of large sites, while also obtaining the advantage of creative site design, improved appearance, compatibility of uses, optimum service by community facilities, and better functioning of vehicular access and circulation. It is the intent of this article to allow development of large sites subject to specific regulations concerning permitted uses, but only subject to regulations concerning lot area, building coverage, yard spaces and building height insofar as the city council shall deem appropriate to fulfill the intent of this article, upon presentation of certification from the owners, developers or other parties at interest in the development of such sites that they will adhere to development policies which will fulfill the intent of this article.

(b) Types of districts. Two types of districts accommodating primarily residential or nonresidential uses are created as follows:

(1) PUD-R Planned Unit Development—Residential. The PUD-R district is intended to accommodate residential uses, with nonresidential uses integrated into the design of such districts as secondary uses.

(2) PUD-C Planned Unit Development—Commercial. The PUD-C district is intended to accommodate primarily nonresidential uses, with residential uses integrated into the design of such districts as secondary uses.

(c) Design and planning features. The types of residential dwelling units and the types of nonresidential uses allowed to be established in such districts increase with increasing site size of such districts, based upon the premise that increased site size will allow proper design, including functional interrelations, buffer treatments separating uses with potentially incompatible characteristics of use, design of access patterns, and relationships of uses within such planned unit developments with uses in adjacent districts. It is the intent of this article that such design and planning features be incorporated properly into any PUD district hereafter created, and that the planning commission and city council shall consider the existence and appropriateness of such features before any amendment to the zoning map is adopted to create such district.

STAFF RECOMMENDATION

Staff recommends that City Council annex the property and assign interim future land use classification of Neighborhood Activity Corridor (AC-1) at the time of annexation.

Staff recommends City Council assign interim zoning of Planned Unit Development-Residential District (PUD-R) at the time of annexation.

Future Land Use Map

4.91 acres Woodcreek Farms Road and +/- 0.17 acres W/S Woodcreek Farms Road
TMS# 25800-03-47 and 25800-03-28;
Current FLU: Neighborhood (Medium Density), Proposed FLU: AC-1

Department of Planning & Development Services

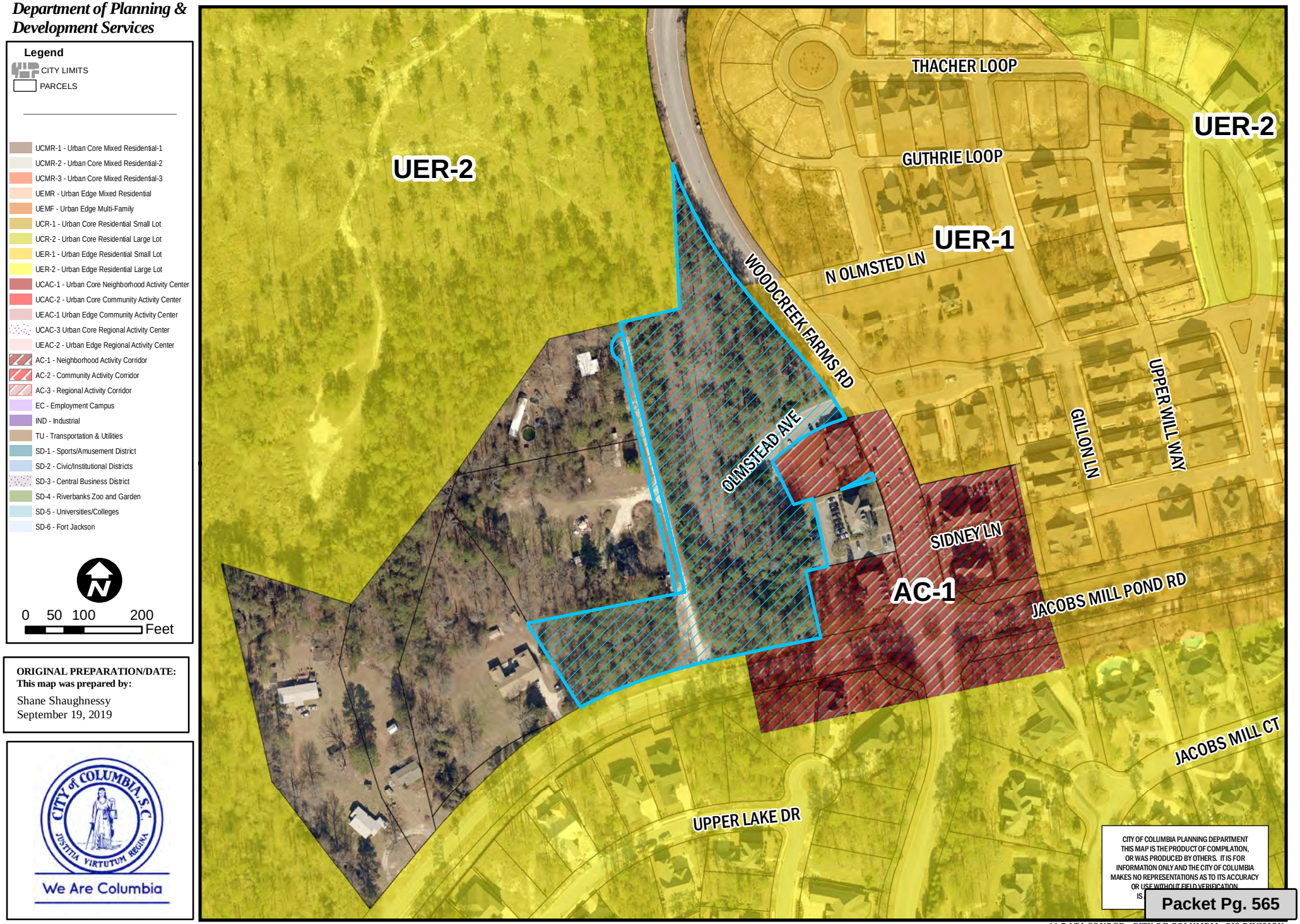

ORIGINAL PREPARATION/DATE:
This map was prepared by:
Shane Shaughnessy
September 19, 2019

We Are Columbia

*** DATA SOURCE - CITY OF COLUMBIA, GIS DIVISION*

Zoning Map

4.91 acres Woodcreek Farms Road and +/- 0.17 acres W/S Woodcreek Farms Road
TMS# 25800-03-47 and 25800-03-28;
Current Zoning: PDD, Proposed Zoning: PUD-R

50.a

Department of Planning & Development Services

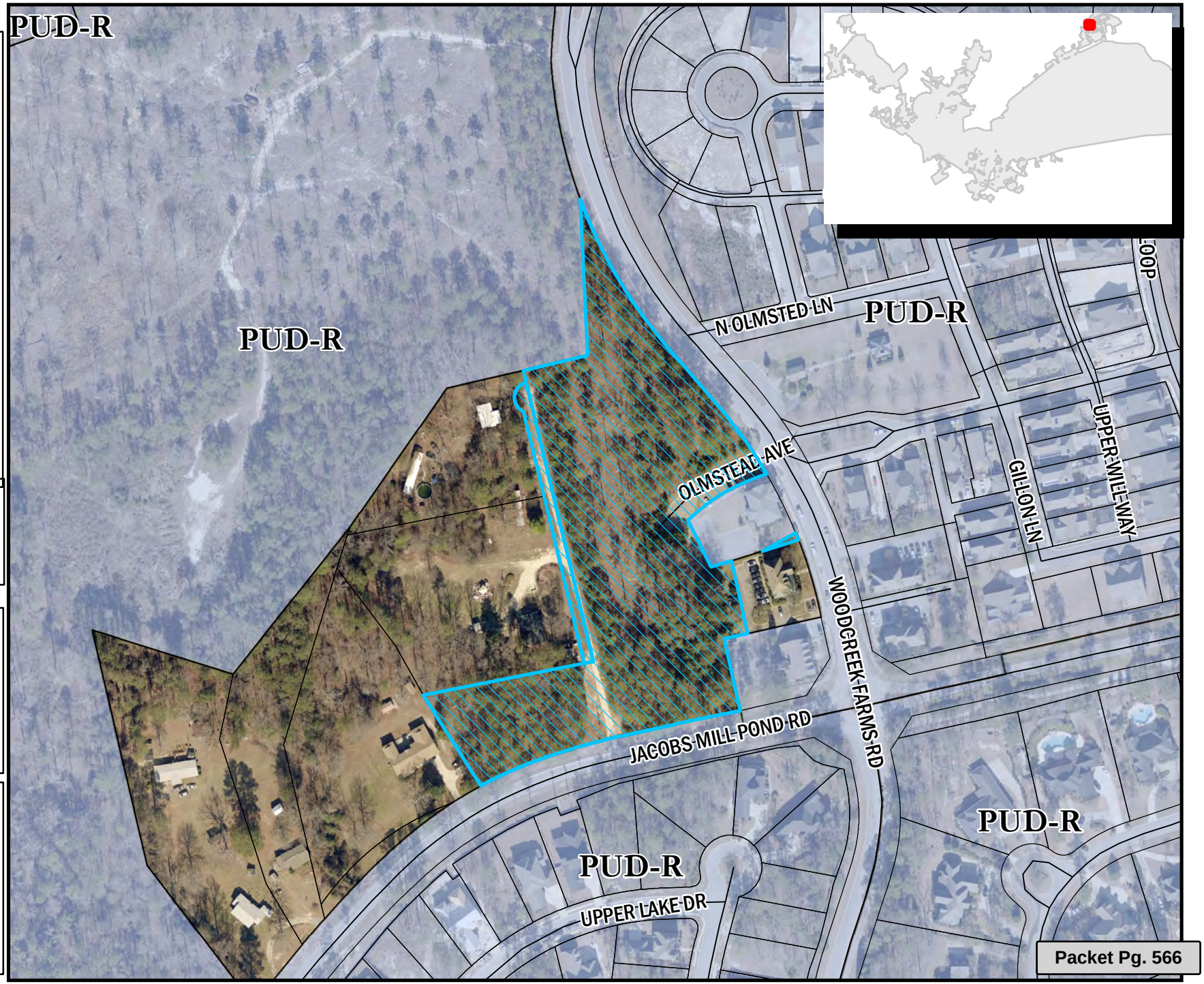

Legend

PARCELS

D-1	C-1
RS-1	C-2
RS-1A	C-3
RS-1B	C-3A
RS-2	C-4
RS-3	C-5
RD	M-1
RD-2	M-2
RG-1	PUD-C
RG-1A	PUD-LS
RG-2	PUD-LS-E
RG-3	PUD-LS-R
UTD	PUD-R
MX-1	OUT OF CITY
MX-2	

0 50 100 200 Feet

ORIGINAL PREPARATION/DATE:
This map was prepared by:

Shane Shaughnessy
September 18, 2019

DISCLAIMER:
The City of Columbia Department of Planning and Development Services data represented on this map or plan is the product of compilation, as produced by others. It is provided for informational purposes only and the City of Columbia makes no representation as to its accuracy. Its use without field verification is at the sole risk of the user.

We Are Columbia

*** DATA SOURCE - CITY OF COLUMBIA, GIS DIVISION*

LEGAL DEPARTMENT DRAFT

ORDINANCE NO.: 2019-088

Annexing 4.91 acres, Woodcreek Farms Road and 0.17 acres W/S Woodcreek Farms Road, Richland County TMS# 25800-03-47 and 25800-03-28

WHEREAS, a proper petition has been filed with the City Council by one hundred (100%) percent of the property owners of the within described property under the provisions of South Carolina Ann. Sec. 5-3-150; and,

WHEREAS, it appears to City Council that the annexation of the property would be in the best interest of the property owners and the City of Columbia; NOW, THEREFORE,

BE IT ORDAINED by the Mayor and City Council of the City of Columbia, South Carolina, this ___ day of _____, 2019, that the property described herein is hereby annexed to and becomes a part of the City of Columbia effective immediately. This property shall be assigned interim zoning of Planned Unit Development-Residential District (PUD-R), apportioned to City Council District 4, Census Tract 114.07, contains 5.08 acres, and shall be assigned an interim land use classification of Neighborhood Activity Corridor (AC-1).

PROPERTY DESCRIPTION: See Attached Exhibit "A"

Richland County TMS NO.: 25800-03-47 and 25800-03-28

Also included in the territory hereby annexed are all contiguous portions of all public rights of way, streets and highways.

Requested by:

Assistant City Manager Gentry

_____
Mayor

Approved by:

_____
City Manager

Approved as to form:

_____
City Attorney

ATTEST:

_____
City Clerk

Introduced:
Final Reading:

Last revised: 11/8/2019
19003256

EXHIBIT "A"
PROPERTY DESCRIPTION
ORDINANCE NO.: 2019-088

ALL that certain piece, parcel or tract of land, with the improvements thereon, if any, situate, lying and being near the City of Columbia, in the County of Richland, State of South Carolina, consisting of approximately 5.31 total acres, as shown on a Plat prepared for Woodcreek Development, LLC, by United Design Services, Inc., dated June 25, 2013 (the "Plat") and recorded in the office of the Richland County ROD in Book 1885, page 3565, the Plat being incorporated by reference for a more complete description of the Property.

Less and except all that certain piece, parcel or lot of land, containing 0.40 acres, together with improvements thereon, situate, lying and being near the City of Columbia, in the County of Richland, State of South Carolina, being shown and designated as Parcel "A" containing 0.31 acres and lying in the City of Columbia and Parcel "B" containing 0.09 acres and lying in the County of Richland, on a plat entitled "Final Plat Prepared for 1712 Woodcreek, LLC" by Belter & Associates, Inc., dated September 1, 2016, and recorded in the office of the Register of Deeds for Richland County in Record Book 2146 at page 217. Reference to said plat is made for a more complete and accurate description.

AND

All that certain piece, parcel or tract of land, with the improvements thereon, if any, situate, lying and being near the City of Columbia, in the County of Richland, State of South Carolina, containing 0.17 acres, more or less, and shown and designated as "Property to be Annexed" on an Annexation Exhibit dated September 16, 2019, and titled ±0.17 acre, W/S Woodcreek Farms Road, TMS# 25800-03-28. Said parcel having such boundaries and measurements as are shown on said Annexation Exhibit, all measurements being a little more or a little less.

MEMORANDUM

Office of the City Manager

TO: Department Heads

FROM: Teresa Wilson, City Manager

DATE: September 19, 2019

RE: **Property Address:** 4.91 acres, Woodcreek Farms Road and +/- 0.17 acres, W/S Woodcreek Farms Road
Richland County TMS#: 25800-03-47 and 25800-03-28
Owner(s): PD Limited, LLC and Woodcreek Development, LLC
Current Use: Vacant
Proposed Use: Residential
Current County Land Use: Neighborhood (Medium Density)
Proposed City Land Use: Neighborhood Activity Corridor (AC-1)
Current County Zoning: Planned Development District (PDD)
Proposed City Zoning: Planned Unit Development – Residential (PUD-R)
Reason for Annexation: Municipal Services; Donut Hole
City Council District: 4
Census Tract: 114.07

The Planning & Development Services advises that the above referenced property has been offered for annexation. Attached, please find a map or drawing reflecting the property. You are directed to forward your comments and/or recommendations regarding the issue of whether to annex or not to Planning & Development Services. Planning & Development Services will compile your comments for City Council consideration.

Planning & Development Services staff will see to it that this matter is placed on the **October 7, 2019** Planning Commission's agenda. Planning & Development Services staff will notify the City Attorney of the Planning Commission's zoning recommendation by forwarding a copy of this form, completed, as soon as the Planning Commission has met.

/atl
Attachments

cc:
Clint Shealy, Assistant City Manager
Jeff Palen, Assistant City Manager/CFO
Aubrey Jenkins, Fire Chief
Joseph Jaco, Director, Utility Operations
Robert Anderson, Public Works Director
Krista Hampton, Planning & Development Services
Lakesha Shannon, Business License Administrator
Greg Williams, Deputy Business License Administrator
Angela Adams, Customer Care Administrator
Jerry Thompson, Building Official
Michelle Brazell, Engineering
Denny Daniels, Engineering
Police Planning & Research
Alfreda Tindal, Richland Co. 911 Addressing Coordinator
Missy Gentry, Assistant City Manager
Teresa Knox, City Attorney
William Holbrook, Police Chief
Dana Higgins, Director, Engineering
Jan Alonso, Finance Director
Gloria Saaed, Community Development Director
George Adams, Fire Marshal
Rachel Bailey, Zoning Administrator
Jacquelyn Richburg, Columbia-Richland 911
David Hatcher, Housing Official
Richland County Solid Waste Collection
John Fellows, Planning Administrator
Tori Salvant, Dev. Center Administrator

Planning Commission Land Use Recommendation: AC-1 (Land Use classification) by 7 - 0 on 10/7/19 (mm/dd/yyyy).

Planning Commission Zoning Recommendation: PUD-R (Zoning classification) by 7 - 0 on 10/7/19 (mm/dd/yyyy).

(Signature of Annexation Coordinator)

Future Land Use Map

4.91 acres Woodcreek Farms Road and +/- 0.17 acres W/S Woodcreek Farms Road
TMS# 25800-03-47 and 25800-03-28;
Current FLU: Neighborhood (Medium Density), Proposed FLU: AC-1

Department of Planning & Development Services

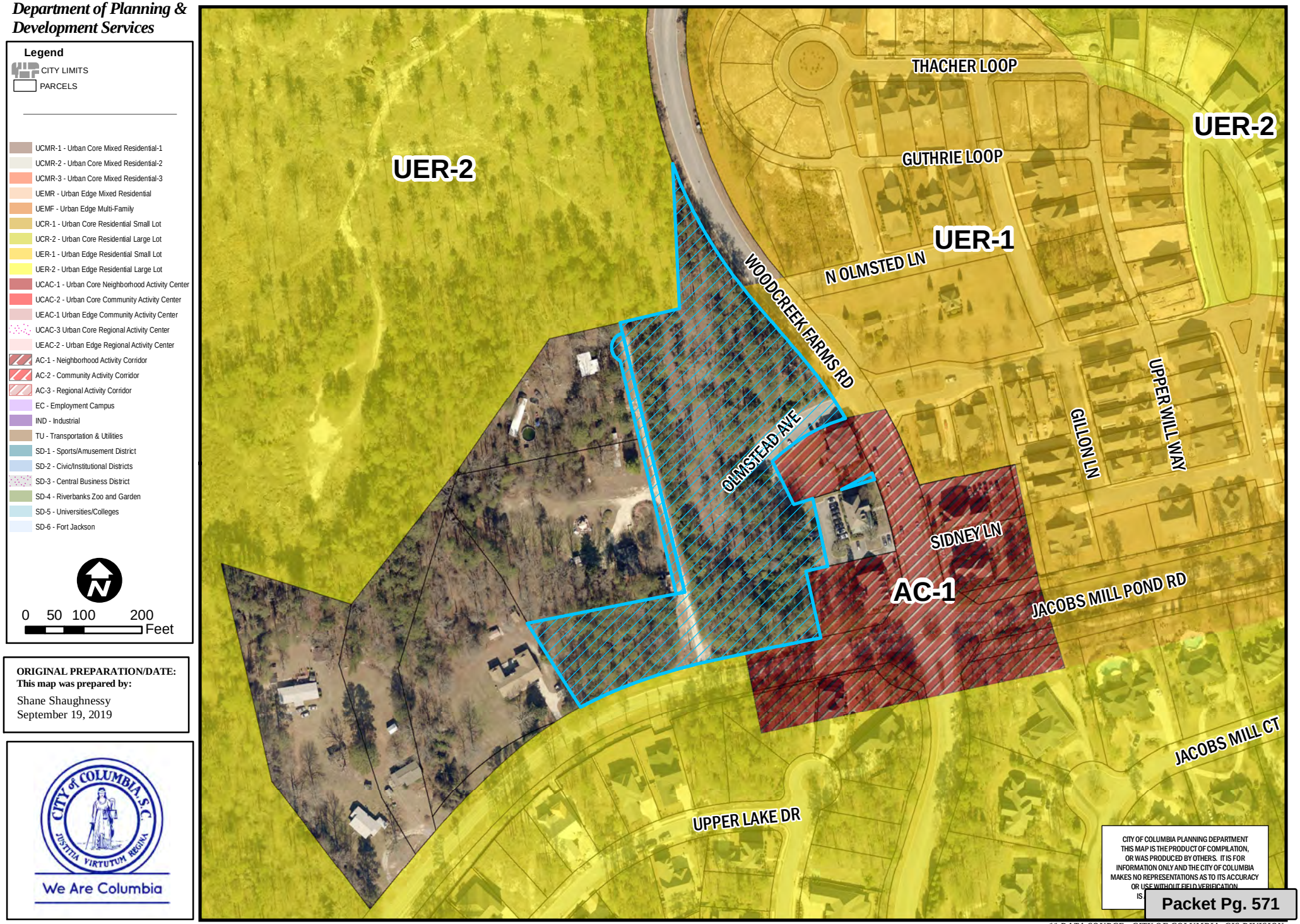

ORIGINAL PREPARATION/DATE:
This map was prepared by:
Shane Shaughnessy
September 19, 2019

We Are Columbia

*** DATA SOURCE - CITY OF COLUMBIA, GIS DIVISION*

Zoning Map

Department of Planning & Development Services

4.91 acres Woodcreek Farms Road and +/- 0.17 acres W/S Woodcreek Farms Road
TMS# 25800-03-47 and 25800-03-28;
Current Zoning: PDD, Proposed Zoning: PUD-R

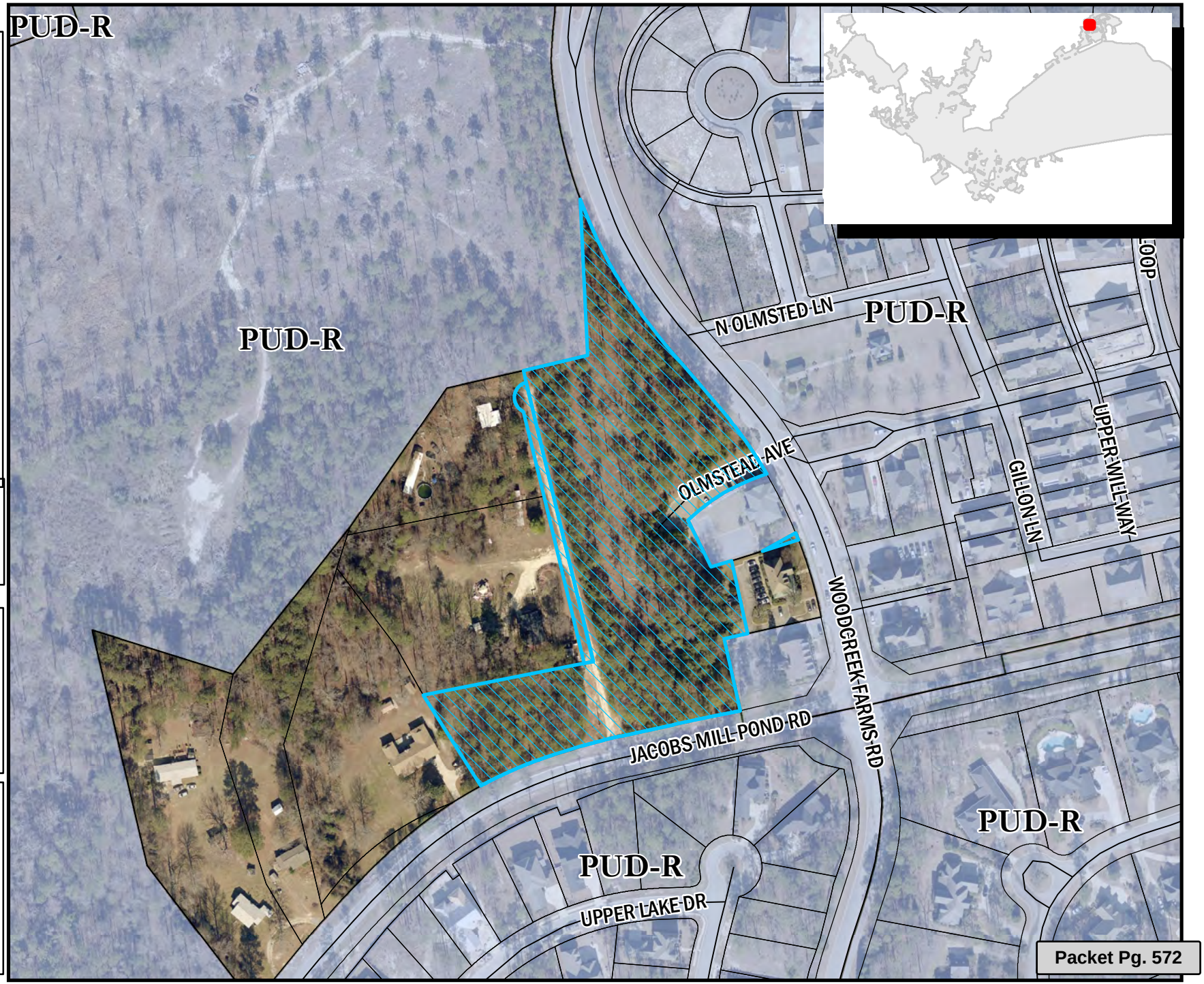

Legend

PARCELS

D-1	C-1
RS-1	C-2
RS-1A	C-3
RS-1B	C-3A
RS-2	C-4
RS-3	C-5
RD	M-1
RD-2	M-2
RG-1	PUD-C
RG-1A	PUD-LS
RG-2	PUD-LS-E
RG-3	PUD-LS-R
UTD	PUD-R
MX-1	OUT OF CITY
MX-2	

0 50 100 200 Feet

ORIGINAL PREPARATION/DATE:
This map was prepared by:

Shane Shaughnessy
September 18, 2019

DISCLAIMER:
The City of Columbia Department of Planning and Development Services data represented on this map or plan is the product of compilation, as produced by others. It is provided for informational purposes only and the City of Columbia makes no representation as to its accuracy. Its use without field verification is at the sole risk of the user.

CITY of COLUMBIA, S.C. JUSTITIA VIRTUTUM REGINA
We Are Columbia

** DATA SOURCE - CITY OF COLUMBIA, GIS DIVISION

STATE OF SOUTH CAROLINA)
) PETITION FOR ANNEXATION
COUNTY OF RICHLAND)

The undersigned, being the owner(s) of the property described below hereby petition(s) the Mayor and City Council for annexation to the City of Columbia, South Carolina pursuant to S.C. Code Ann. Section 5-3-150, 1976, as amended.

Property Description: ALL that certain piece, parcel or tract of land, with the improvements thereon, if any, situate, lying and being near the City of Columbia, in the County of Richland, State of South Carolina, consisting of approximately 5.31 total acres, as shown on a Plat prepared for Woodcreek Development, LLC, by United Design Services, Inc., dated June 25, 2013 (the "Plat") and recorded in the office of the Richland County ROD in Book 1885, page 3565, the Plat being incorporated by reference for a more complete description of the Property.

Less and except all that certain piece, parcel or lot of land, containing 0.40 acres, together with improvements thereon, situate, lying and being near the City of Columbia, in the County of Richland, State of South Carolina, being shown and designated as Parcel "A" containing 0.31 acres and lying in the City of Columbia and Parcel "B" containing 0.09 acres and lying in the County of Richland, on a plat entitled "Final Plat Prepared for 1712 Woodcreek, LLC" by Belter & Associates, Inc., dated September 1, 2016, and recorded in the office of the Register of Deeds for Richland County in Record Book 2146 at page 217. Reference to said plat is made for a more complete and accurate description.

Richland County TMS: 25800-03-47

Property Addresses: 4.91 acres, Woodcreek Farms Road

PD Limited, LLC

BY: _____ Date: 9-16-19

Harold V Pickrel, Jr
(Print or Type Name)

ITS: Manager

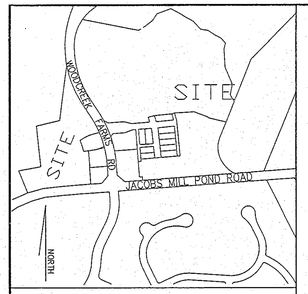

VICINITY MAP N.T.S.

NOTES:
THIS SURVEY WAS PERFORMED WITHOUT THE BENEFIT OF A TITLE EXAMINATION BY AN ATTORNEY. NO ABSTRACT TITLE SEARCH, NOR TITLE COMMITMENT SEARCH WERE FURNISHED. THERE MAY BE OTHER RECORDED OR UNRECORDED SETBACKS, EASEMENTS, RESTRICTIONS OR RIGHTS-OF-WAY THAT MAY AFFECT THIS PROPERTY THAT WERE NOT OBSERVED OR NOT SHOWN ON THIS SURVEY.
THIS SURVEY IS BASED ON REFERENCED PLATS OF RECORD AND EXISTING EVIDENCE AND CONDITIONS OBSERVED THE DATE OF THIS SURVEY.
SUBSURFACE AND ENVIROMENTAL CONDITIONS WERE NOT SURVEYED OR EXAMINED OR CONSIDERED AS PART OF THIS SURVEY. NO EVIDENCE OR STATEMENT IS MADE CONCERNING THE EXISTENCE OF UNDERGROUND OR OVERHEAD CONDITIONS, CONTAINERS OR FACILITIES THAT MAY AFFECT THE USE OR DEVELOPMENT OF THIS PROPERTY.
EASEMENTS LOCATIONS SHOWN ARE APPROXIMATE.

REFERENCES:
1. PLAT OF PROPERTY SUBDIVIDED FOR BROWN C. ROSS BY B.P. BARBER & ASSOC. DATED OCTOBER 10, 1958.
2. PLAT OF 57.56 ACRES, PROPERTY OF COUNTY PROPERTIES – A SC GENERAL PARTNERSHIP BY DANIEL RIDDICK & ASSOCIATES DATED DECEMBER 11, 1985.
3. PLAT FOR WOODCREEK DEVELOPMENT PARTNERSHIP BY UNITED DESIGN SERVICES, INC. DATED JANUARY 27, 2000, REVISED FEBRUARY 14, 2000.
4. PLAT PREPARED FOR M.L. BARTLETT, JR. & EMILIE Z. BARTLETT BY UNITED DESIGN SERVICES, INC. DATED MAY 24, 2005, REVISED JULY 11, 2006.
5. PLAT PREPARED FOR 1710 WOODCREEK FARMS ROAD, LLC BY UNITED DESIGN SERVICES, INC., DATED APRIL 1, 2009.
6. BOUNDARY PLAT OF WOODCREEK FARMS ROAD PARCEL "B" BY UNITED DESIGN SERVICES, INC. DATED MAY 25, 1999.
7. PLAT OF PROPERTY OF WOODCREEK PROPERTIES, A SOUTH CAROLINA GENERAL PARTNERSHIP BY DANIEL RIDDICK & ASSOCIATES, INC. DATED JULY 1, 1956.

I HAVE CONSULTED THE F.E.M.A. FLOOD INSURANCE RATE MAP PANEL 45079C0280 K DATED 9/29/2010 AND TO THE BEST OF MY KNOWLEDGE & BELIEF, THE PROPERTY IS LOCATED IN ZONE "X" AS SHOWN THEREON.

I HEREBY STATE THAT TO THE BEST OF MY KNOWLEDGE, INFORMATION, AND BELIEF, THE SURVEY SHOWN HEREIN WAS MADE IN ACCORDANCE WITH THE REQUIREMENTS OF THE MINIMUM STANDARDS MANUAL FOR THE PRACTICE OF LAND SURVEYING IN SOUTH CAROLINA, AND MEETS OR EXCEEDS THE REQUIREMENTS FOR A CLASS B SURVEY AS SPECIFIED THEREIN; ALSO THERE ARE NO VISIBLE ENCROACHMENTS OR PROJECTIONS OTHER THAN SHOWN.

WILLIAM M. BRASINGTON, PROFESSIONAL LAND SURVEYOR – No.9312

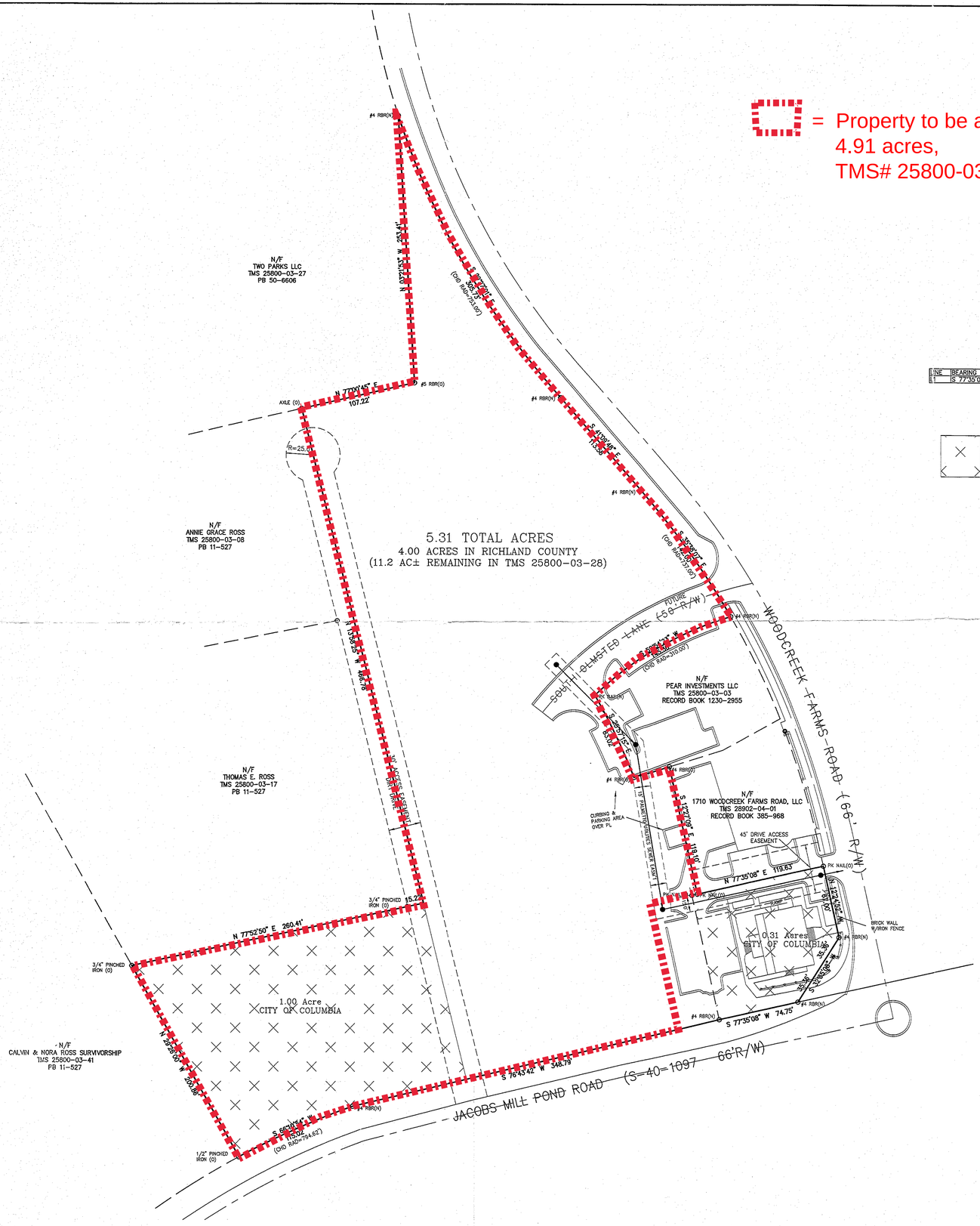

Book 1885-3565
20130065553 09/06/2013 14:35:17.220
Fee:$10.00 County Tax: $0.00 State Tax: $0.00
Plat Oversized
20130065553 John T. Hopkins II Richland County R.O.D.

NOTIFICATION:

You are hereby advised that you are required to provide water and/or sewer services to any new lots created as a result of this subdivision at no cost to the City of Columbia.

SUBDIVISION PLAT
The Subdivision Plat shown hereon has been found to comply with the City of Columbia Subdivision Regulation and has been approved for recording in the office of the Clerk of Court of Richland County, South Carolina. This approval shall not be deemed to constitute approval by the City of Columbia of the encroachments revealed by the plat.

Date 5-1-13
Jonathan E. Chambers
Land Development Administrator

Richland County, South Carolina
Approved For Recording
Date 07/31/13 MS-13-92
Sean A. Busbee, Land Development Planner

UNITED DESIGN SERVICES, INC.
LAND SURVEYING SERVICES
140 FRIARSGATE BLVD., IRMO, SC 29063 (803)750-9142

SOUTH CAROLINA NOTARY PUBLIC
UNITED DESIGN SERVICES, INC.
No. C00574
CERTIFICATE OF AUTHORITY

PLAT PREPARED FOR
WOODCREEK DEVELOPMENT LLC
RICHLAND COUNTY near COLUMBIA, SOUTH CAROLINA

NO.	DATE	REVISION / DESCRIPTION	BY

MAG NORTH

25 0 50
SCALE: 1" = 50'

DATE: JUNE 25, 2013
PORTION
T.M.S.#: 25800-03-028
DWG.#: UB-1317
SHEET
1 OF 1

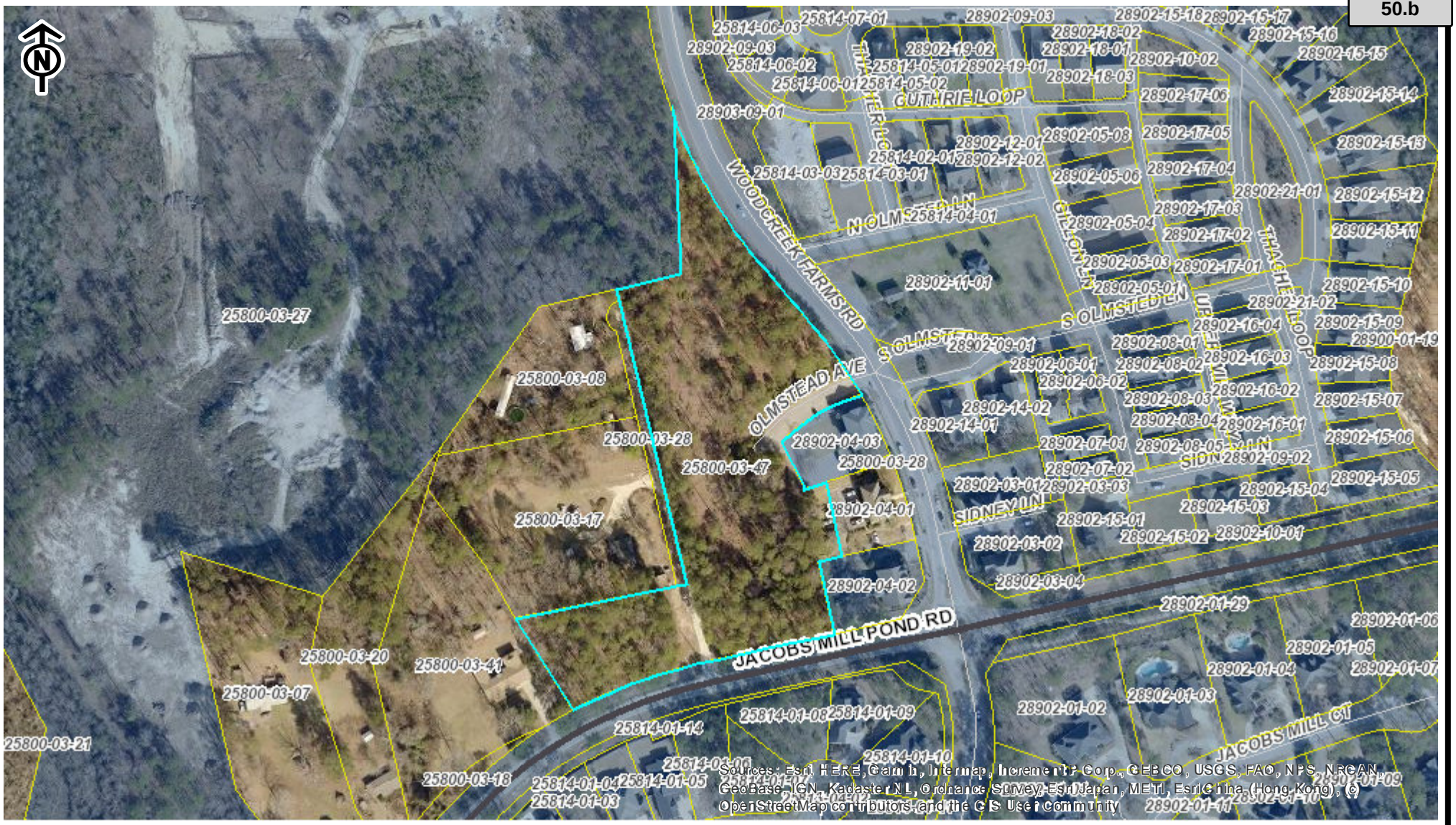

We Are Columbia

TMS# 25800-03-47

City of Columbia

This map was prepared using the City GIS Viewer:

City of Columbia - GIS Division
Friday, September 13, 2019

Tax Parcel Labels
Tax Parcel
Interstates

Highways

US
SC

Arterial Streets
Columbia City Limits
Red: Red
Green: Green
Blue: Blue

0 0.0275 0.055 0.11 mi

CITY OF COLUMBIA
GIS DATA DISCLAIMER:
The City of Columbia GIS data represented on this map or plan is the product of the compilation of data produced by others. It is provided for informational purposes only and the City of Columbia makes no representation as to its accuracy. Its use without field verification is at the sole risk

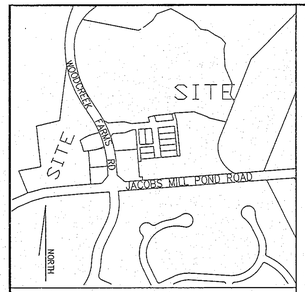

VICINITY MAP N.T.S.

NOTES:
THIS SURVEY WAS PERFORMED WITHOUT THE BENEFIT OF A TITLE EXAMINATION BY AN ATTORNEY. NO ABSTRACT TITLE SEARCH, NOR TITLE COMMITMENT SEARCH WERE FURNISHED. THERE MAY BE OTHER RECORDED OR UNRECORDED SETBACKS, EASEMENTS, RESTRICTIONS OR RIGHTS-OF-WAY THAT MAY AFFECT THIS PROPERTY THAT WERE NOT OBSERVED OR NOT SHOWN ON THIS SURVEY.
THIS SURVEY IS BASED ON REFERENCED PLATS OF RECORD AND EXISTING EVIDENCE AND CONDITIONS OBSERVED THE DATE OF THIS SURVEY.
SUBSURFACE AND ENVIROMENTAL CONDITIONS WERE NOT SURVEYED OR EXAMINED OR CONSIDERED AS PART OF THIS SURVEY. NO EVIDENCE OR STATEMENT IS MADE CONCERNING THE EXISTENCE OF UNDERGROUND OR OVERHEAD CONDITIONS, CONTAINERS OR FACILITIES THAT MAY AFFECT THE USE OR DEVELOPMENT OF THIS PROPERTY.
EASEMENTS LOCATIONS SHOWN ARE APPROXIMATE.

REFERENCES:
1. PLAT OF PROPERTY SUBDIVIDED FOR BROWN C. ROSS BY B.P. BARBER & ASSOC. DATED OCTOBER 10, 1958.
2. PLAT OF 57.56 ACRES, PROPERTY OF COUNTY PROPERTIES – A SC GENERAL PARTNERSHIP BY DANIEL RIDDICK & ASSOCIATES DATED DECEMBER 11, 1985.
3. PLAT FOR WOODCREEK DEVELOPMENT PARTNERSHIP BY UNITED DESIGN SERVICES, INC. DATED JANUARY 27, 2000, REVISED FEBRUARY 14, 2000.
4. PLAT PREPARED FOR M.L. BARTLETT, JR. & EMILIE Z. BARTLETT BY UNITED DESIGN SERVICES, INC. DATED MAY 24, 2005, REVISED JULY 11, 2006.
5. PLAT PREPARED FOR 1710 WOODCREEK FARMS ROAD, LLC BY UNITED DESIGN SERVICES, INC., DATED APRIL 1, 2009.
6. BOUNDARY PLAT OF WOODCREEK FARMS ROAD PARCEL "B" BY UNITED DESIGN SERVICES, INC. DATED MAY 25, 1999.
7. PLAT OF PROPERTY OF WOODCREEK PROPERTIES, A SOUTH CAROLINA GENERAL PARTNERSHIP BY DANIEL RIDDICK & ASSOCIATES, INC. DATED JULY 1, 1956.

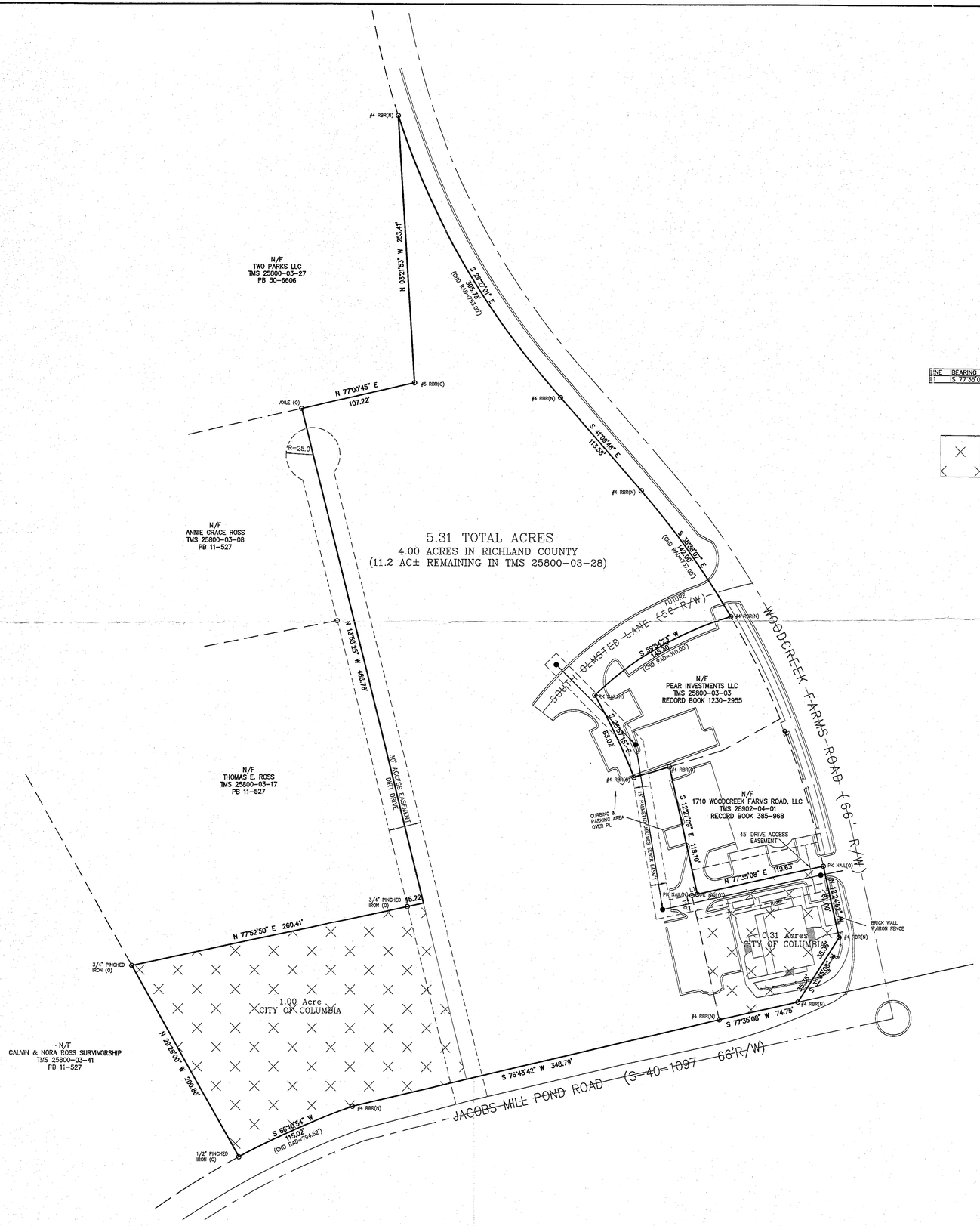

LINE	BEARING	DISTANCE
L1	S 77°35'08" W	5.12'

DENOTES PROPERTY IN THE CITY OF COLUMBIA

Book 1885-3565
Plat Oversized
2013055553 09/09/2013 14:35:17.220
Fee:$10.00 County Tax: $0.00 State Tax: $0.00
2013055553 John T. Hopkins II Richland County R.O.D.

NOTIFICATION:

You are hereby advised that you are required to provide water and/or sewer services to any new lots created as a result of this subdivision at no cost to the City of Columbia.

SUBDIVISION PLAT
The Subdivision Plat shown hereon has been found to comply with the City of Columbia Subdivision Regulation and has been approved for recording in the office of the Clerk of Court of Richland County, South Carolina. This approval shall not be deemed to constitute approval by the City of Columbia of the encroachments revealed by the plat.

Date 5-1-13
Jonathan E. Chambers
Land Development Administrator

Richland County, South Carolina
Approved For Recording
Date 07/31/13 MS-13-92
Sean A. Busbee, Land Development Planner

I HAVE CONSULTED THE F.E.M.A. FLOOD INSURANCE RATE MAP PANEL 45079C0280 K DATED 9/29/2010 AND TO THE BEST OF MY KNOWLEDGE & BELIEF, THE PROPERTY IS LOCATED IN ZONE "X" AS SHOWN THEREON.

I HEREBY STATE THAT TO THE BEST OF MY KNOWLEDGE, INFORMATION, AND BELIEF, THE SURVEY SHOWN HEREIN WAS MADE IN ACCORDANCE WITH THE REQUIREMENTS OF THE MINIMUM STANDARDS MANUAL FOR THE PRACTICE OF LAND SURVEYING IN SOUTH CAROLINA, AND MEETS OR EXCEEDS THE REQUIREMENTS FOR A CLASS B SURVEY AS SPECIFIED THEREIN; ALSO THERE ARE NO VISIBLE ENCROACHMENTS OR PROJECTIONS OTHER THAN SHOWN.

WILLIAM M. BRASINGTON, PROFESSIONAL LAND SURVEYOR – No.9312

UNITED DESIGN SERVICES, INC.
LAND SURVEYING SERVICES
140 FRIARSGATE BLVD., IRMO, SC 29063 (803)750-9142

SOUTH CAROLINA NOTARY PUBLIC
UNITED DESIGN SERVICES, INC.
No. C00574
CERTIFICATE OF AUTHORIZATION

PLAT PREPARED FOR
WOODCREEK DEVELOPMENT LLC
RICHLAND COUNTY near COLUMBIA, SOUTH CAROLINA

NO.	DATE	REVISION / DESCRIPTION	BY

MAG NORTH

25 0 50
SCALE: 1" = 50'

DATE: JUNE 25, 2013
PORTION
T.M.S.#: 25800-03-028
DWG.#: UB-1317
SHEET
1 OF 1

LINE	BEARING	DISTANCE
L1	S 77°35'08" W	5.12'
L2	S77°35'08"W	32.99'

DENOTES PROPERTY IN THE CITY OF COLUMBIA

REFERENCES:
1. PLAT OF PROPERTY SUBDIVIDED FOR BROWN C. ROSS BY B.P. BARBER & ASSOC. DATED OCTOBER 10, 1958.
2. PLAT OF 57.56 ACRES, PROPERTY OF COUNTY PROPERTIES – A SC GENERAL PARTNERSHIP BY DANIEL RIDDICK & ASSOCIATES DATED DECEMBER 11, 1985.
3. PLAT FOR WOODCREEK DEVELOPMENT PARTNERSHIP BY UNITED DESIGN SERVICES, INC. DATED JANUARY 27, 2000, REVISED FEBRUARY 14, 2000.
4. PLAT PREPARED FOR M.L. BARTLETT, Jr. & EMILIE Z. BARTLETT BY UNITED DESIGN SERVICES, INC. DATED MAY 24, 2005, REVISED JULY 11, 2006.
5. PLAT PREPARED FOR 1710 WOODCREEK FARMS ROAD, LLC BY UNITED DESIGN SERVICES, INC., DATED APRIL 1, 2009.
6. BOUNDARY PLAT OF WOODCREEK FARMS ROAD PARCEL "B" BY UNITED DESIGN SERVICES, INC. DATED MAY 25, 1999.
7. PLAT OF PROPERTY OF WOODCREEK PROPERTIES, A SOUTH CAROLINA GENERAL PARTNERSHIP BY DANIEL RIDDICK & ASSOCIATES, INC. DATED JULY 1, 1986.

BELTER & ASSOCIATES, INC. PROFESSIONAL LAND SURVEYORS
No. 1712 WOODCREEK FARMS ROAD
TELEPHONE: (803) 732-4004
COLUMBIA, SOUTH CAROLINA 29063

Book 2146-217
2016068122 9/13/2016 08:36:48:553 Plat Standard
Fee: $5.00 County Tax: $0.00 State Tax: $0.00
2016068122 John T. Hopkins II Richland County R.O.D.

MAG. NORTH

NOTIFICATION:

You are hereby advised that you are required to provide water and/or sewer services to any new lots created as a result of this subdivision at no cost to the City of Columbia.

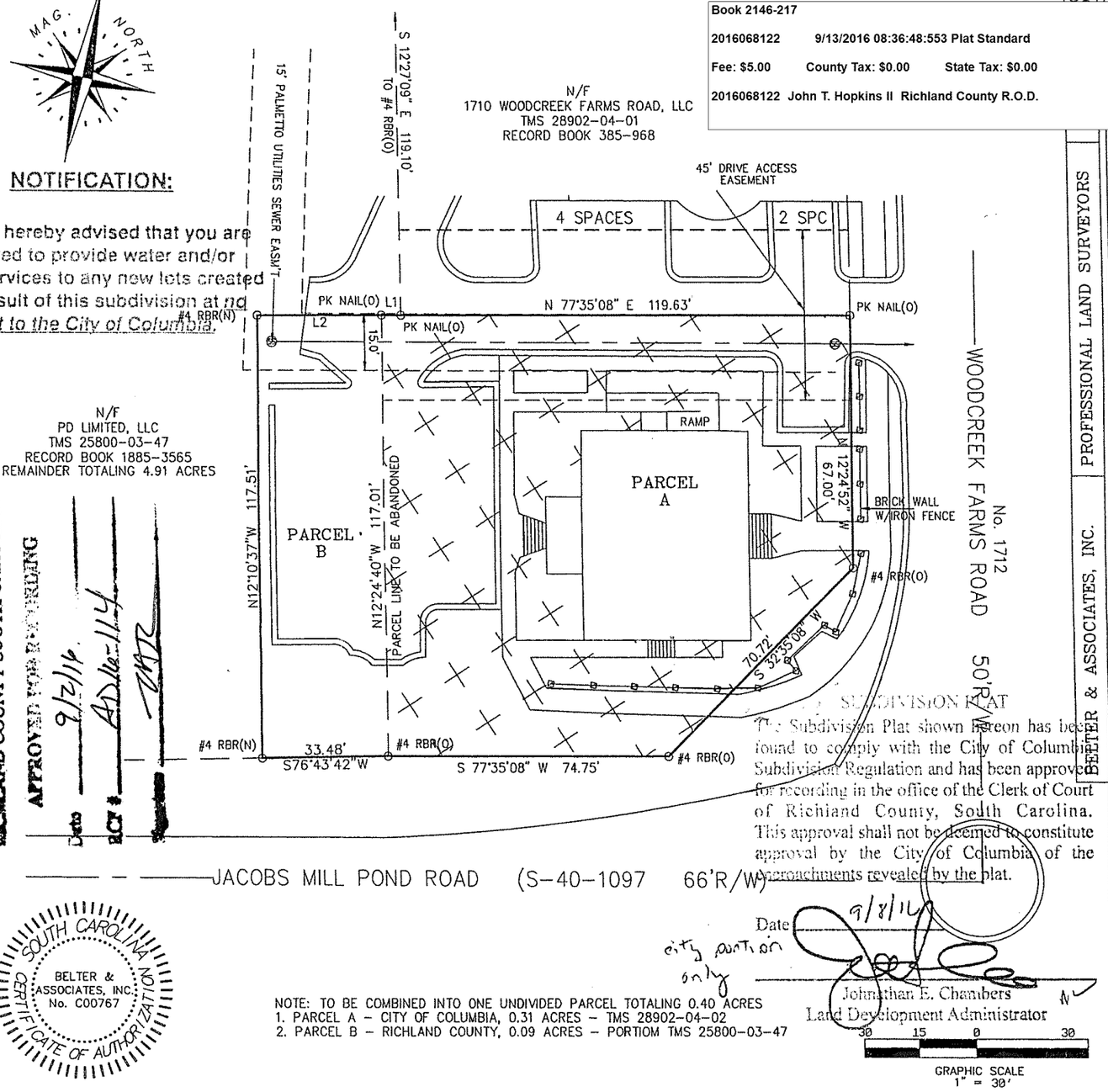

PLANNING & DEVELOPMENT SERVICES
RICHLAND COUNTY SOUTH CAROLINA
APPROVED FOR RECORDING
Date 9/12/16
RCT #

SUBDIVISION PLAT
This Subdivision Plat shown hereon has been found to comply with the City of Columbia Subdivision Regulation and has been approved for recording in the office of the Clerk of Court of Richland County, South Carolina. This approval shall not be deemed to constitute approval by the City of Columbia of the encroachments revealed by the plat.

Date 9/8/16
city portion only
Johnathan E. Chambers
Land Development Administrator

SOUTH CAROLINA CERTIFICATE OF AUTHORIZATION
BELTER & ASSOCIATES, INC.
No. C00767

NOTE: TO BE COMBINED INTO ONE UNDIVIDED PARCEL TOTALING 0.40 ACRES
1. PARCEL A – CITY OF COLUMBIA, 0.31 ACRES – TMS 28902-04-02
2. PARCEL B – RICHLAND COUNTY, 0.09 ACRES – PORTIOM TMS 25800-03-47

N
30 15 0 30
GRAPHIC SCALE
1" = 30'

SURVEY DATE: 09-01-2016	FINAL PLAT PREPARED FOR	CITY: COLUMBIA, SC
LOT AREA: 17244 SQ. FT. = 0.40 ACRES		COUNTY: RICHLAND

1712 WOODCREEK, LLC

SHOWN AS A PORTION OF PROPERTY ON A PLAT PREPARED FOR WOODCREEK DEVELOPMENT LLC, BY UNITED DESIGN SERVICES, INC., DATED 06-25-13, AND RECORDED IN THE OFFICE OF THE R.O.D. FOR RICHLAND COUNTY IN RECORD BOOK 1885-3565.
ADDITIONAL REFERENCE:

RICHLAND COUNTY TMS# 25800-04-02		NO FLOOD STUDY PROVIDED

EXCEPT AS SPECIFICALLY STATED OR SHOWN ON THIS PLAT. THIS SURVEY DOES NOT PURPORT TO REFLECT ANY OF THE FOLLOWING WHICH MAY BE APPLICABLE TO THE SUBJECT REAL ESTATE; EASEMENTS, OTHER THAN POSSIBLE EASEMENTS THAT WERE VISIBLE AT THE TIME OF MAKING OF THIS SURVEY. BUILDING SETBACK LINES, RESTRICTIVE COVENANTS, SUBDIVISION RESTRICTIONS, ZONING OR OTHER LAND-USE REGULATIONS, AND ANY OTHER FACTS THAT AN ACCURATE AND CURRENT TITLE SEARCH MAY DISCLOSE.

ONLY THE LISTED DOCUMENTS SHOWN HEREON WERE CONSIDERED AS A PART OF THIS SURVEY.

THE LOCATIONS OF UNDERGROUND UTILITIES AS SHOWN HEREON ARE BASED ON ABOVE-GROUND VISIBLE STRUCTURES. LOCATIONS OF UNDERGROUND UTILITIES, STRUCTURES AND/OR EASEMENTS MAY VARY FROM LOCATIONS SHOWN HEREON UNLESS DESIGNATED WITH BEARINGS & DISTANCES. THIS PROPERTY MAY BE SUBJECT TO EASEMENTS AND SETBACKS OF RECORD.

I HEREBY STATE THAT TO THE BEST OF MY PROFESSIONAL KNOWLEDGE, INFORMATION, AND BELIEF, THE SURVEY SHOWN HEREIN WAS MADE IN ACCORDANCE WITH THE REQUIREMENTS OF THE STANDARDS OF PRACTICE MANUAL FOR LAND SURVEYING IN SOUTH CAROLINA, AND MEETS OR EXCEEDS THE REQUIREMENTS FOR A CLASS B SURVEY AS SPECIFIED THEREIN; ALSO THERE ARE NO VISIBLE ENCROACHMENTS OR PROJECTIONS OTHER THAN SHOWN.

WILLIAM M. BRASINGTON SCPLS # 9312

JOB NO. 1609003 FB. XXX, PG. XX WW-641

LEGAL DEPARTMENT DRAFT

RESOLUTION NO.: R-2019-094

Adopting City of Columbia Outdoor Dining Encroachment Policy

BE IT RESOLVED this ___ day of _____, 2019 that the Mayor and City Council of the City of Columbia, South Carolina hereby adopt as official City policy the Outdoor Dining Encroachment Policy attached hereto. This policy replaces and supersedes all previous policies formerly referred to as outdoor dining encroachment policy of the City or its departments.

Requested by:

Assistant City Manager Gentry

_____
Mayor

Approved by:

_____
City Manager

Approved as to form:

_____
Deputy City Attorney

ATTEST:

_____
City Clerk

Introduced:
Final Reading:

Planning & Development Services
Development Center
1136 Washington Street, 1st Floor
Columbia, SC 29201
Office: 803-545-3483
www.columbiasc.gov/planning-development

Outdoor Dining Encroachment Policy

The City of Columbia supports and encourages the public use and enjoyment of sidewalks, tree zones, and other right-of-way areas for outdoor dining in all entertainment districts; however, use of sidewalks and other public areas must be aesthetically pleasing, ADA compliant, and safe for pedestrian and vehicular traffic.

Rules and Regulations

Locations

Sidewalk dining encroachments are allowed on any portion of the sidewalk adjacent to a legally licensed eating and drinking establishment. The encroachment area may not extend beyond the frontage of the eating and drinking establishment without the written consent of the adjoining property owner.

Use

Sidewalk dining encroachments shall be used for serving food and drinks to the patrons of the eating or drinking establishment granted the outdoor dining encroachment.

Clearance

A minimum of a 5 feet clear path shall be provided between the dining encroachment area (tables, chairs, umbrellas, planters, etc.) and street amenities such as telephone poles, light poles, parking meters, transformers, street trees, etc. and must provide adequate area for ADA compliance.

Encroachment Areas

Encroachment areas shall be clearly defined and delineated with removable planters, stanchions, bollards or any other removable barrier to mark the limits of the dining encroachment.

Furniture

Tables, chairs, and planters should be made for outdoor use and designed to withstand the elements and should be and weighted to withstand strong winds.

Number of Tables and Chairs

The number of tables and chairs for outdoor dining will be included in the count for the maximum number of occupants allowed established by the City of Columbia Fire Department. This maximum number of occupants allowed shall not be exceeded with outdoor dining.

Storage and Maintenance

Tables and chairs should be stored inside the eating and drinking establishment or secured with a locking device whenever the business is closed.

A business owner or outdoor dining operator shall maintain the outdoor dining space in a clean and orderly manner.

Liability Insurance

Proof of general liability insurance in the name of the eating and drinking establishment and naming the City of Columbia as an additional insured in the amount of not less than $600,000 per occurrence shall be provided with the application for an Outdoor Dining Encroachment.

Signage

No off-premise signage may be included in the encroachment area with the exception that Non-moveable signage shall be placed on all tables within the designated outdoor dining encroachment area which identifies the tables as belonging to the business and umbrellas may contain the name of the eating and drinking place.

Application

An application for an outdoor dining encroachment shall include the following information.

1. The name, address, and telephone number of the restaurant desiring to operate sidewalk dining.
2. The name, address, telephone number, and email address of the restaurant operator.
3. The type of food and beverage, or food product, to be sold and served for the sidewalk dining.
4. The hours of operation of the restaurant and the proposed hours of operation of sidewalk dining.
5. A scaled drawing or site plan showing the following:
    a. The section of sidewalk or right-of-way to be used for the dining.
    b. The section to be kept clear for pedestrian use.
    c. The existing curbline and right-of-way line.
    d. The proposed placement of the tables, chairs and other furnishings on the sidewalk.
6. Evidence of adequate insurance, as determined by the city, to hold the city harmless from claims arising out of the operation of the sidewalk dining.

7. An indemnity statement whereby the restaurant operator agrees to indemnify and hold harmless the city and its officers, agents, and employees from any claim arising from the operation of the sidewalk dining.
8. A copy of all permits and licenses issued by the state, county or city, including health and ABC permits, if any, necessary for the operation of the restaurant or business, or a copy of the application for the permit if no permit has been issued. This requirement includes any permits or certificates issued by the city for exterior alterations or improvements to the restaurant.
9. Such additional information as may be requested by the City Manager or designee to determine compliance with this article.

An application for an outdoor dining encroachment that is submitted but does not contain all of the information listed above shall be deemed incomplete and will not be processed.

Permit

An outdoor dining encroachment permit shall be issued upon submittal and approval of a completed application and supplemental information as described in the application section of the Outdoor Dining Encroachments policy.

The permit shall be visibly posted in the eating and drinking establishment with the approved scaled drawing or site plan.

Alcohol

Beer, wine, and liquor drinks purchased with food from the eating and drinking place can be served within the defined and delineated encroachment area if the business is legally licensed to sell such beverages.

Patrons are not permitted to travel with beer, wine, and liquor drinks outside of the encroachment area.

Change of Ownership

Outdoor dining encroachments shall be granted to the business owner and are nontransferable. A change in ownership shall require a new outdoor dining encroachment permit.

Temporary Removal

The City of Columbia may remove or rearrange tables, chairs, planters, etc. to conduct repairs on sidewalks, roads, utilities, parking meters, etc. When feasible, notice shall be provided to the operator of the eating and drinking place prior to the commencement of work.

Revocation

Sidewalk dining encroachments can be revoked at any time by the City Manager or designee. Revocation shall be in writing and shall state the reason for revocation.

LEGAL DEPARTMENT DRAFT

RESOLUTION NO.: R-2019-096

Authorizing the City Manager to execute an Agreement Concerning Electrical Service Rights between Fairfield Electric Cooperative, Tri-County Electric Co-operative and Mid-Carolina Electric Cooperative, Inc. and Dominion Energy South Carolina, Inc.

BE IT RESOLVED by the Mayor and City Council this ___ day of _____, 2019, that the City Manager is hereby authorized to execute the attached Agreement Concerning Electrical Service Rights between Fairfield Electric Cooperative, Tri-County Electric Co-operative and Mid-Carolina Electric Cooperative, Inc., Dominion Energy South Carolina, Inc. and the City of Columbia, or on a form approved by the City Attorney, to provide the companies with detailed infrastructure and parcel mapping to afford future efficient and effective service plans.

Requested by:

Assistant City Manager Gentry

_____
Mayor

Approved by:

_____
City Manager

Approved as to form:

_____
Deputy City Attorney

ATTEST:

_____
City Clerk

Introduced:
Final Reading:

Last revised: 19003398
10/21/2019

AGREEMENT CONCERNING ELECTRIC SERVICE RIGHTS AMONG FAIRFIELD ELECTRIC COOPERATIVE, INC., TRI-COUNTY ELECTRIC COOPERATIVE, INC., MID-CAROLINA ELECTRIC COOPERATIVE, INC. AND DOMINION ENERGY SOUTH CAROLINA, INC.

This Electric Service Rights Agreement is entered into by and among Dominion Energy South Carolina, Inc. ("DESC"), Fairfield Electric Cooperative, Inc. ("Fairfield Electric"), Tri-County Electric Cooperative, Inc. ("Tri-County Electric"), Mid-Carolina Electric Cooperative, Inc. ("Mid-Carolina"), and the City of Columbia ("City") (collectively, "Parties").

WHEREAS, DESC has a combination electric and natural gas franchise agreement with the City, which is dated on February 20, 2002, and was amended on March 23, 2011, April 18, 2013, and June 19, 2015; and

WHEREAS, Fairfield Electric does not have an electric franchise agreement with the City, but has a limited presence within the City limits; and

WHEREAS, Tri-County Electric does not have an electric franchise agreement with the City, but has a limited presence within the City limits; and

WHEREAS, Mid-Carolina has an electric franchise agreement with the City, which was enacted and ratified on February 9, 2005; and

WHEREAS, the City desires to avoid electric service rights disputes between Fairfield Electric, Tri-County Electric, Mid-Carolina and DESC within the City limits; and

WHEREAS, Fairfield Electric, Tri-County Electric, Mid-Carolina and DESC have engaged in a detailed infrastructure and parcel mapping exercise within the City in an effort to allow all companies to have more certainty in planning to provide electric service and to allow all companies to provide electric service more efficiently and effectively; and

WHEREAS, as agreed to by the Parties, the attached Exhibit A is a map of the City of Columbia with the parcels for which Fairfield Electric is to have electric service rights is shaded in blue, the parcels for which Tri-County Electric is to have electric service rights is shaded in orange, the parcels for which Mid-Carolina is to have electric service rights is shaded in green and the parcels for which DESC is to have electric service rights shaded in red;

NOW THEREFORE, in consideration of the mutual covenants herein contained, the sufficiency of which is acknowledged, the Parties hereby agree as follows:

1. Fairfield Electric, Tri-County Electric, Mid-Carolina and DESC shall enter into Franchise Agreements with the City on June 30, 2020, or earlier if the Parties so agree, provided that both Franchise Agreements will be signed on the same day. The Franchise Agreements shall each have the same effective date, shall each be for a specified term of at least thirty (30) years, shall each expire on the same date certain, and shall each omit any provisions allowing for amendment of the term of the Franchise Agreement. Five (5) business days prior to execution of the Franchise Agreements, each Party shall be provided with the final versions of the Franchise Agreements for the purpose of determining compliance with the terms of this Electric Service Rights Agreement. If any Party determines that either Franchise Agreement does not comply with the terms of this Electric Service Rights Agreement, that Party may terminate this Electric Service Rights Agreement at any time prior to execution of the Franchise Agreements. Upon agreement by all

Parties, the deadline to complete the franchise agreement may be extended one-time up to six months.

All individual franchise agreements in effect at the time of the execution of this agreement shall remain in full force and effect until the expiration of said individual franchise agreements or until such time as new mutually agreed upon franchise agreements are executed by all parties.

2. The Parties agree that Exhibit A is a reasonable assignment of the electric service rights to the parcels located within the City limits and resolves any current and future disputes regarding electric service rights to the parcels. As such, the Franchise Agreements entered into pursuant to Paragraph 1 shall each reference and include as an attachment Exhibit A attached hereto. The Franchise Agreement between DESC and the City shall provide that DESC has electric service rights to the parcels shaded in red on the attached Exhibit A. The Franchise Agreement between Fairfield Electric and the City shall provide that Fairfield Electric has electric service rights to the parcels shaded in blue on the attached Exhibit A. The Franchise Agreement between Tri-County Electric and the City shall provide that Tri-County Electric has electric service rights to the parcels shaded in orange on the attached Exhibit A. The Franchise Agreement between Mid-Carolina and the City shall provide that Mid-Carolina has electric service rights to the parcels shaded in green on the attached Exhibit A. The Franchise Agreements entered into pursuant to Paragraph 1 need not and shall not include any language indicating the possibility of electric service rights disputes.

3. Upon acceptance by City Council of the Franchise Agreement between Fairfield Electric and the City, the Franchise Agreement between Tri-County Electric and the City, the Franchise Agreement between Mid-Carolina and the City and the Franchise Agreement between DESC and the City, DESC shall have electric service rights to the parcels shaded in red on the attached Exhibit A, Fairfield Electric shall have electric service rights to the parcels shaded in blue on the attached Exhibit A, Tri-County Electric shall have electric service rights to the parcels shaded in orange on the attached Exhibit A, and Mid-Carolina shall have electric service rights to the parcels shaded in green on the attached Exhibit A. Except as specifically provided in Paragraphs 4, 5, and 6 herein, the service rights designation in the attached Exhibit A shall be the sole determining factor as to whether Fairfield Electric, Tri-County Electric, Mid-Carolina or DESC has the right to serve a building or structure within a particular parcel.

4. The Parties further agree that Fairfield Electric may continue to provide electric service to any building or structure to which it is already providing electric service as of the effective date of the Franchise Agreements until such building or structure is removed, torn down, razed to the ground, or demolished, even if Exhibit A provides electric service rights for the parcel on which the building or structure is located to DESC, Tri-County Electric, or Mid-Carolina; Tri-County Electric may continue to provide electric service to any building or structure to which it is already providing electric service as of the effective date of the Franchise Agreements until such building or structure is removed, torn down, razed to the ground, or demolished, even if Exhibit A provides electric service rights for the parcel on which the building or structure is located to DESC, Fairfield Electric, or Mid-Carolina; Mid-Carolina may continue to provide electric service to any building or structure to which it is already providing electric service as of the effective date of the Franchise Agreements until such building or structure is removed, torn down, razed to the ground, or demolished, even if Exhibit A provides electric service rights for the parcel on which the building or structure is located to DESC, Fairfield Electric, or Tri-County Electric; and DESC may continue to provide electric service to any building or structure to which it is already providing electric service as of the effective date of the Franchise Agreements until such building or structure is removed, torn down, razed to the ground, or demolished, even if Exhibit A provides electric service rights for the parcel on which the building or structure is located to Fairfield Electric, Tri-County Electric or Mid-

Carolina. After any building or structure that is being served by Fairfield Electric, Tri-County Electric, Mid-Carolina or DESC pursuant to the terms of this Paragraph 4 is removed, torn down, razed to the ground, or demolished, the service rights designation in the attached Exhibit A shall be the sole determining factor as to whether Fairfield Electric, Tri-County Electric, Mid-Carolina or DESC has the right to provide electric service to any future replacement building or structure within that parcel. Each Franchise Agreement entered into pursuant to Paragraph 1 shall contain a provision stating as such.

5. The Parties further agree that, where any new building or structure is constructed so that part of the building or structure resides on a blue parcel of the attached Exhibit A and part of the building or structure resides on a red parcel of the attached Exhibit A, the customer, in its sole discretion, may choose whether Fairfield Electric or DESC provides electric service to such new building or structure. The Parties further agree that, where any new building or structure is constructed so that part of the building or structure resides on an orange parcel of the attached Exhibit A and part of the building or structure resides on a red parcel of the attached Exhibit A, the customer, in its sole discretion, may choose whether Tri-County Electric or DESC provides electric service to such new building or structure. The Parties further agree that, where any new building or structure is constructed so that part of the building or structure resides on a green parcel of the attached Exhibit A and part of the building or structure resides on a red parcel of the attached Exhibit A, the customer, in its sole discretion, may choose whether Mid-Carolina or DESC provides electric service to such new building or structure. The Parties further agree that, where any new building or structure is constructed so that part of the building or structure resides on a blue parcel of the attached Exhibit A and part of the building or structure resides on an orange parcel of the attached Exhibit A, the customer, in its sole discretion, may choose whether Fairfield Electric or Tri-County Electric provides electric service to such new building or structure. The Parties further agree that, where any new building or structure is constructed so that part of the building or structure resides on a blue parcel of the attached Exhibit A and part of the building or structure resides on a green parcel of the attached Exhibit A, the customer, in its sole discretion, may choose whether Fairfield Electric or Mid-Carolina provides electric service to such new building or structure. The Parties further agree that, where any new building or structure is constructed so that part of the building or structure resides on an orange parcel of the attached Exhibit A and part of the building or structure resides on a green parcel of the attached Exhibit A, the customer, in its sole discretion, may choose whether Tri-County Electric or Mid-Carolina provides electric service to such new building or structure. Each Franchise Agreement entered into pursuant to Paragraph 1 shall contain a provision stating as such.

6. The Parties further agree that, upon any future annexation by the City, Fairfield Electric, Tri-County Electric, and Mid-Carolina shall continue to provide electric service to those annexed parcels assigned to it by the Public Service Commission of South Carolina prior to the annexation, and DESC shall continue to provide electric service to those annexed parcels assigned to it by the Public Service Commission of South Carolina prior to the annexation. Each Franchise Agreement entered into pursuant to Paragraph 1 shall contain a provision stating as such.

7. The electric service rights delineated in Exhibit A are in compliance with applicable state law.

8. This Electric Service Rights Agreement will not be amended without the express written consent of all Parties.

9. If the City Council does not approve all Franchise Agreements entered into pursuant to Paragraph 1, this Electric Service Rights Agreement shall be considered terminated, null and void. Each Franchise Agreement entered into pursuant to Paragraph 1 shall contain a provision stating as such.

10. The Parties agree that the Franchise Agreement that DESC enters into pursuant to Paragraph 1 will be a combination electric and gas Franchise Agreement.

IN WITNESS WHEREOF, the duly authorized representatives of the Parties have caused this Electric Service Rights Agreement to be executed on the date first written above.

APPROVED AS TO FORM
Legal Department City of Columbia, SC

WITNESSES:

_____

_____

CITY OF COLUMBIA

_____
Teresa B. Wilson, City Manager
Date: _____

WITNESSES:

_____

_____

DOMINION ENERGY SOUTH CAROLINA, INC.

_____
W. Keller Kissam, President-Electric Operations
Date: _____

WITNESSES:

_____

_____

FAIRFIELD ELECTRIC COOPERATIVE, INC.

_____
Bruce G. Bacon, Chief Executive Officer
Date: _____

WITNESSES:

_____

_____

TRI-COUNTY ELECTRIC COOPERATIVE, INC.

_____
Chad T. Lowder, Chief Executive Officer
Date: _____

WITNESSES:

_____

_____

MID-CAROLINA ELECTRIC COOPERATIVE, INC.

_____
B. Robert Paulling, Chief Executive Officer
Date: _____

Exhibit A - City of Columbia Parcel Assignment

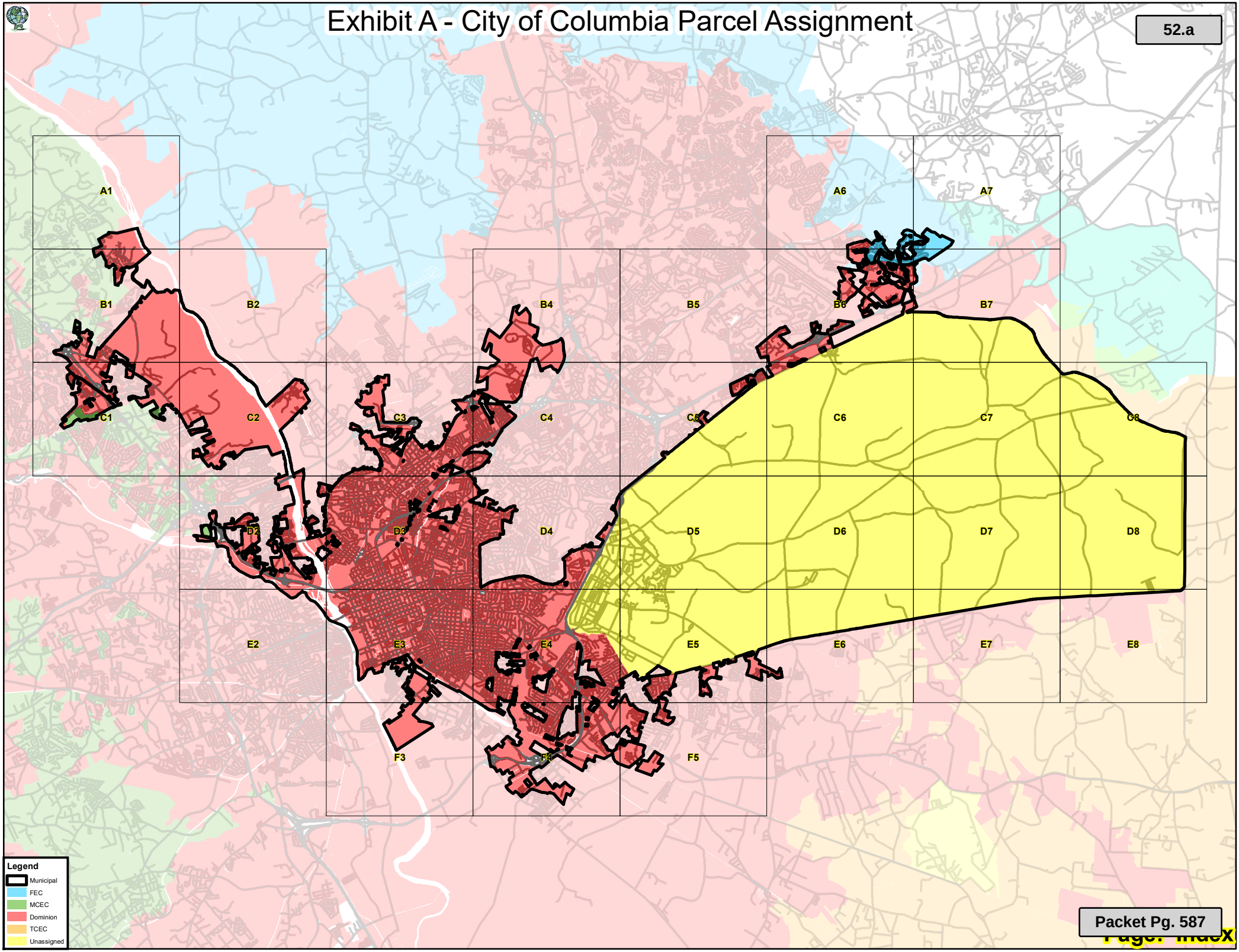

Exhibit A - City of Columbia Parcel Assignment

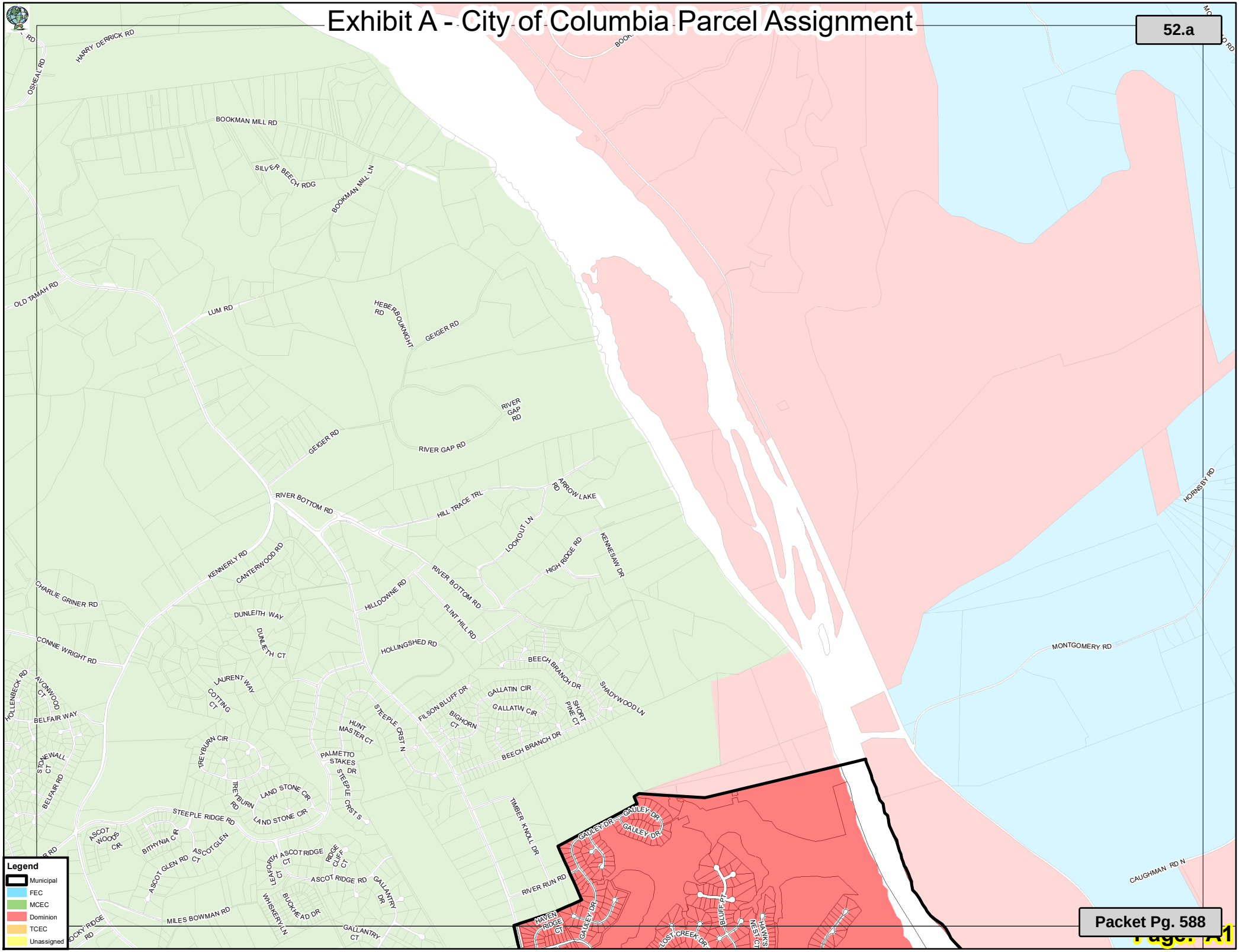

Legend

- Municipal
- FEC
- MCEC
- Dominion
- TCEC
- Unassigned

Exhibit A - City of Columbia Parcel Assignment

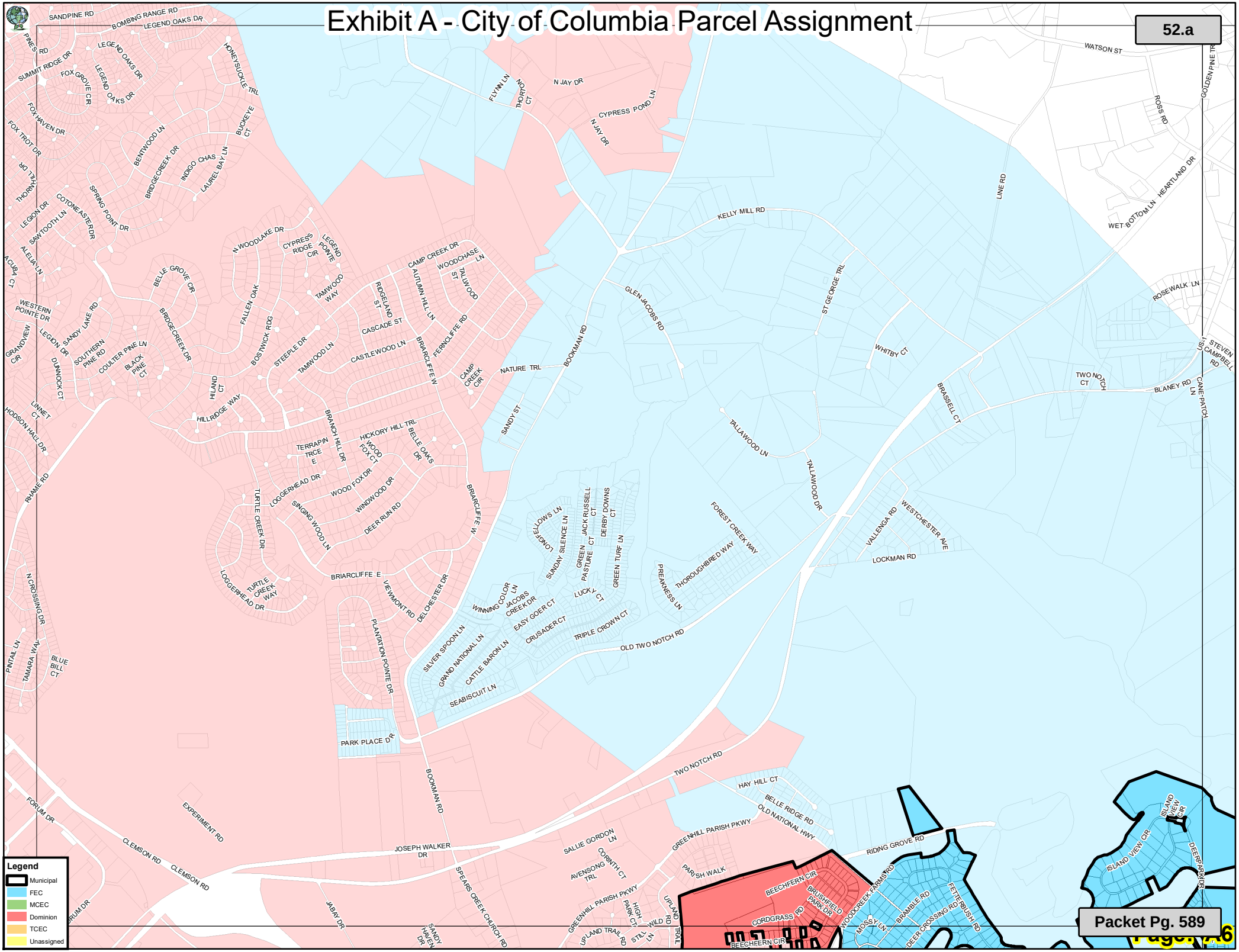

Exhibit A - City of Columbia Parcel Assignment

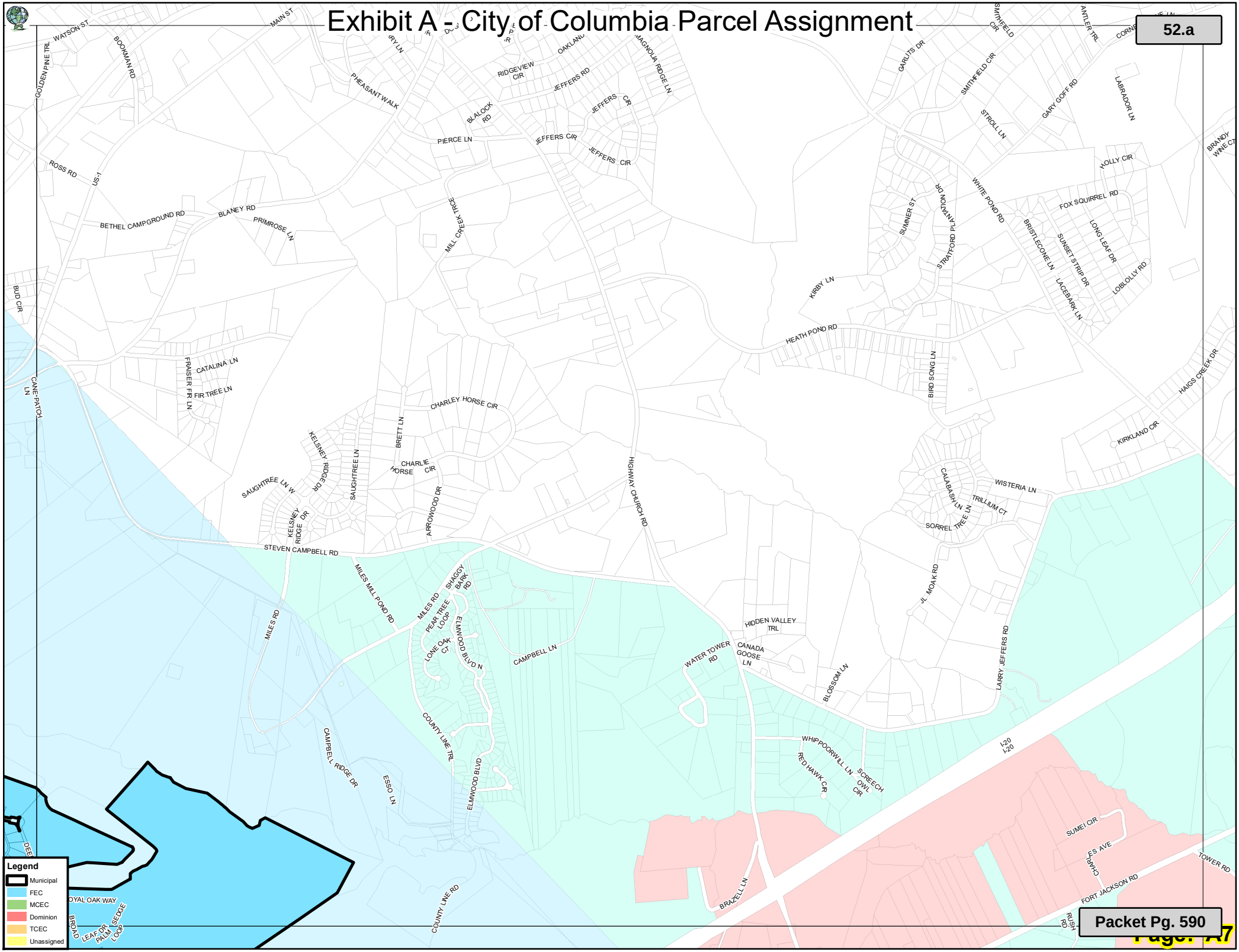

Exhibit A - City of Columbia Parcel Assignment

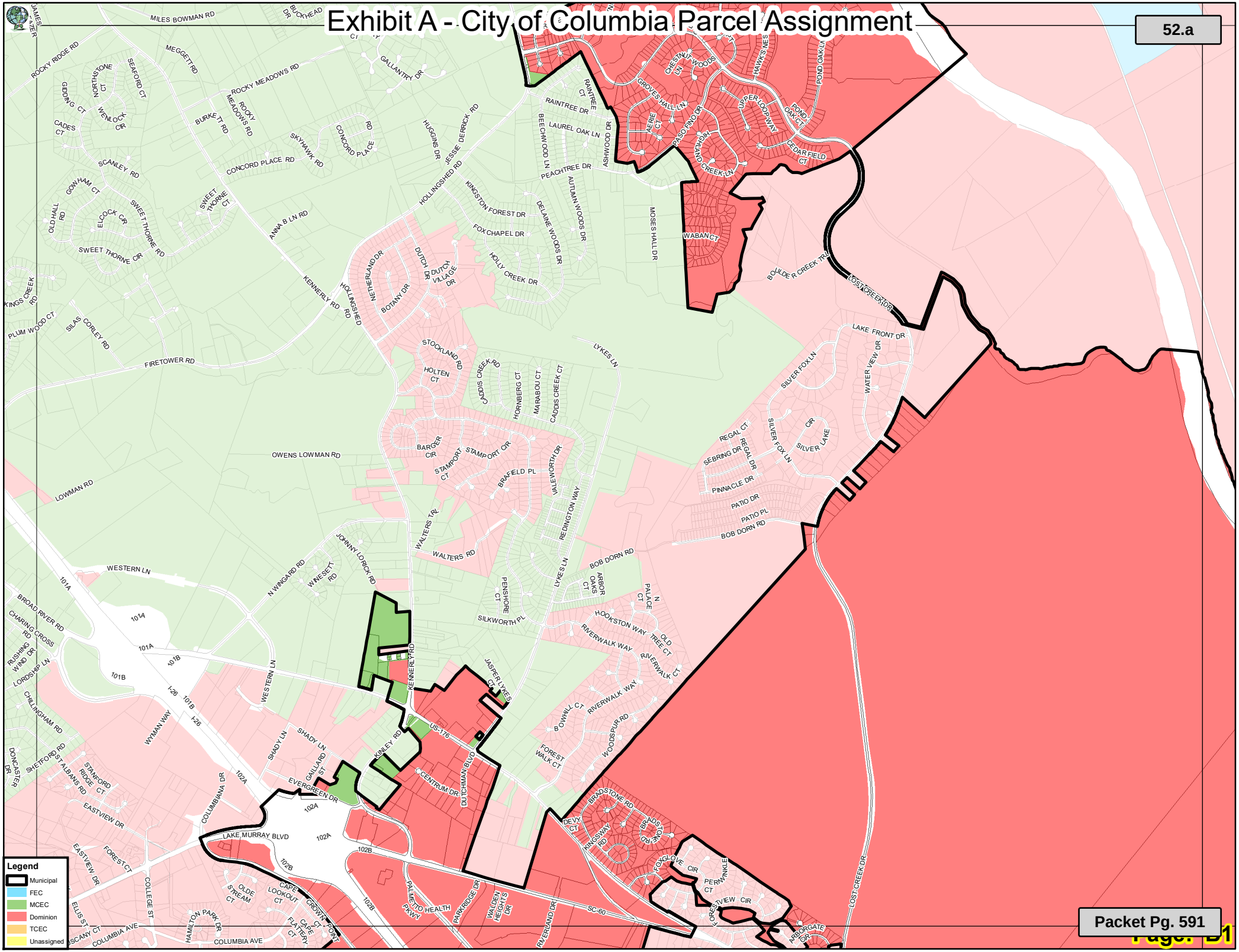

Exhibit A - City of Columbia Parcel Assignment

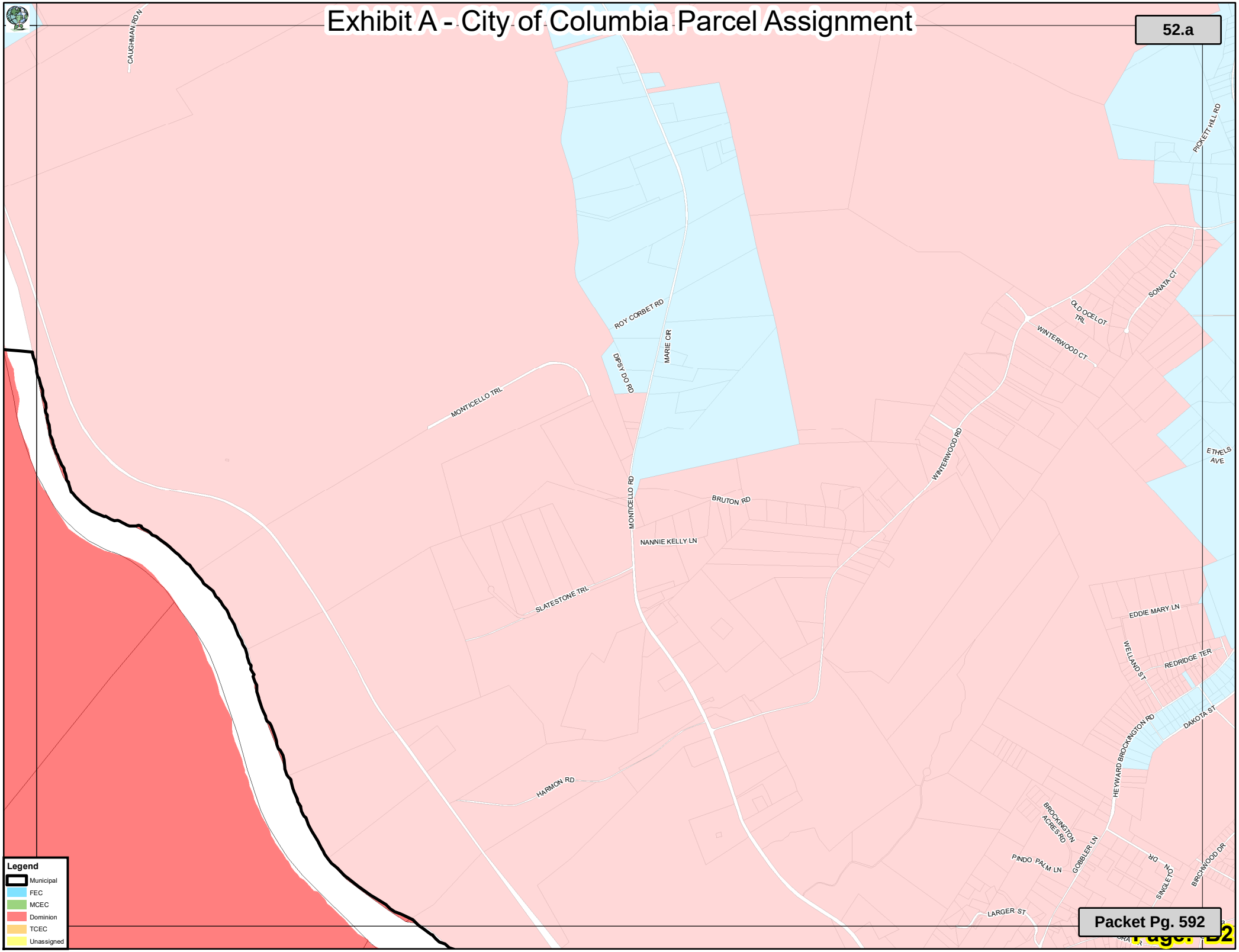

Exhibit A - City of Columbia Parcel Assignment

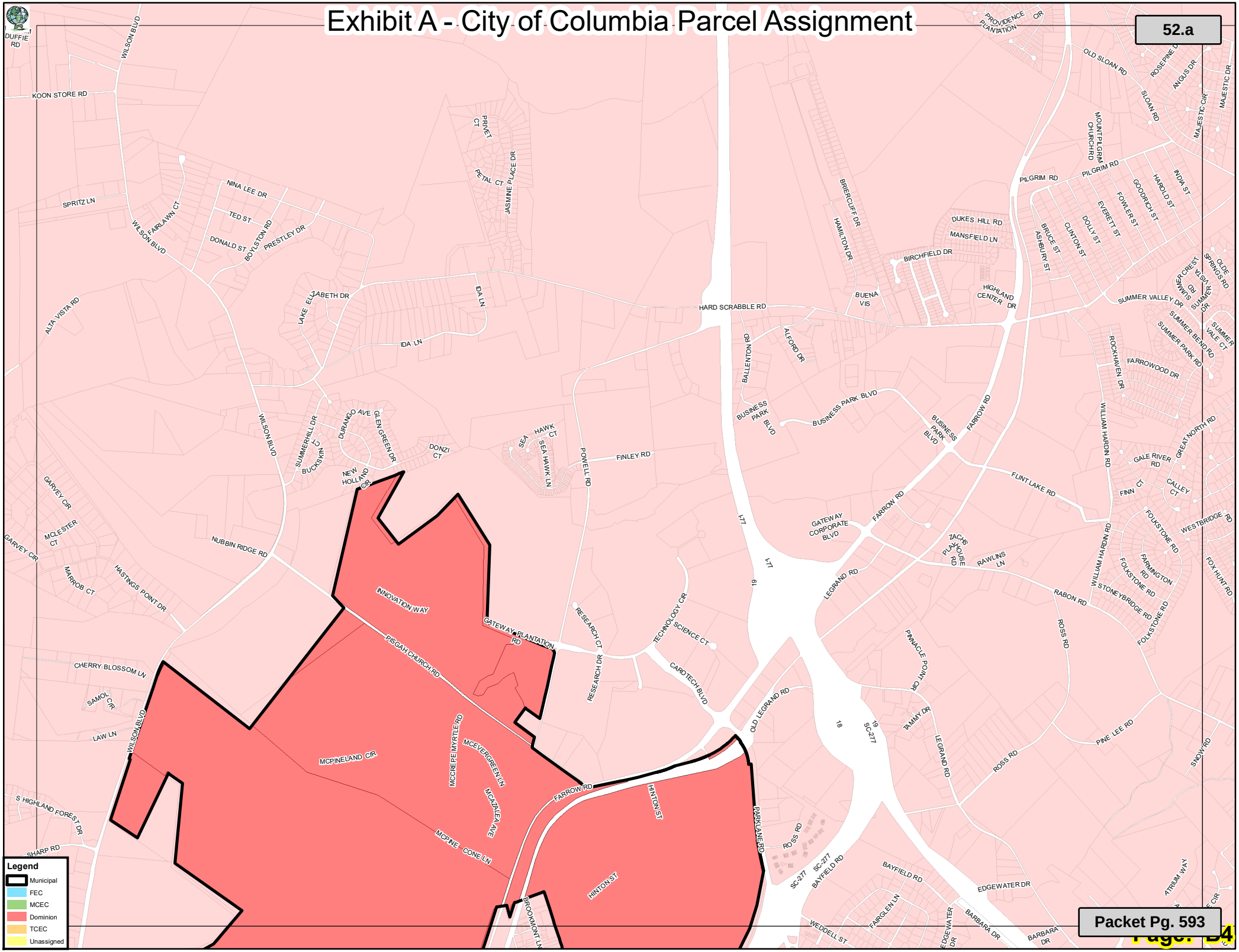

Exhibit A - City of Columbia Parcel Assignment

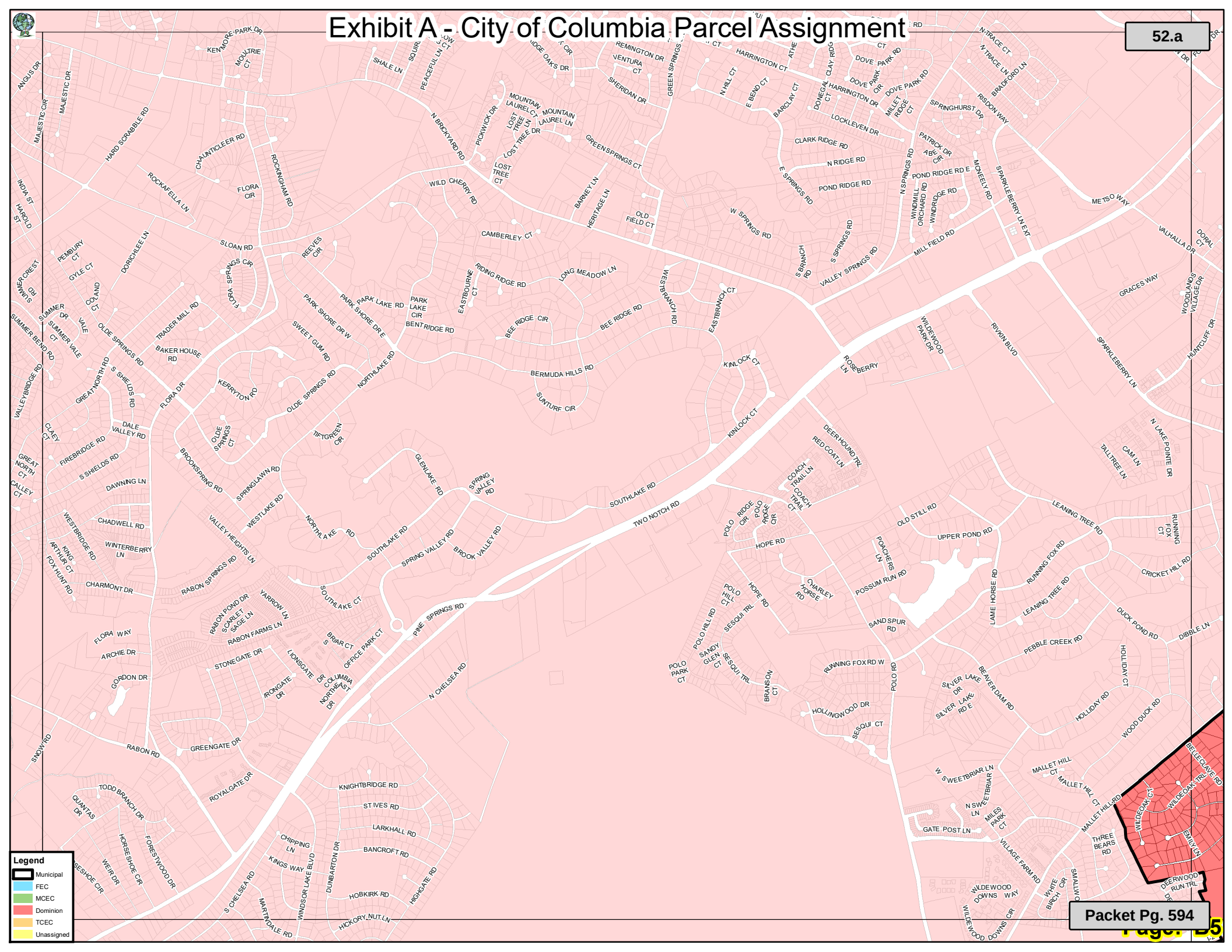

Exhibit A - City of Columbia Parcel Assignment

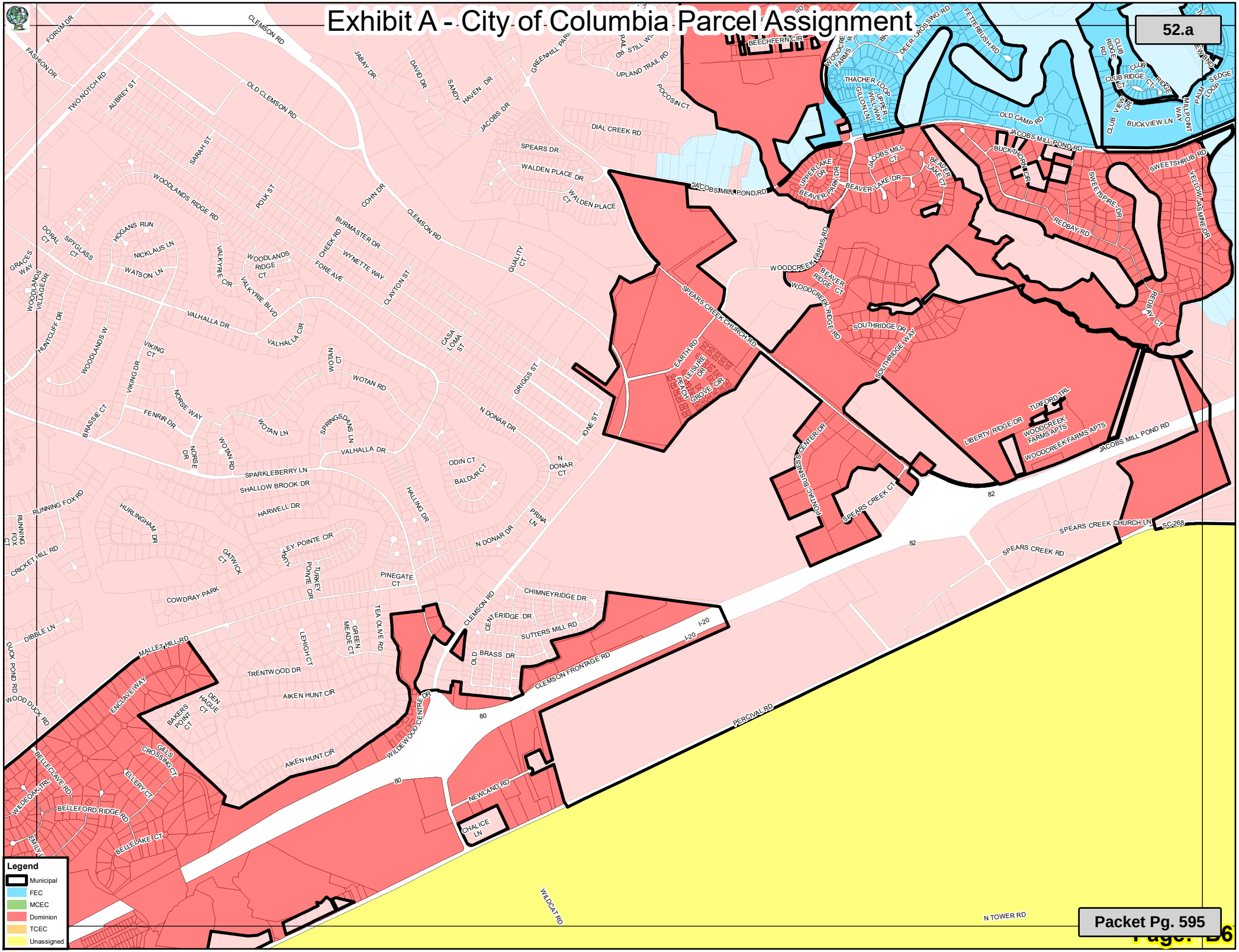

Exhibit A - City of Columbia Parcel Assignment

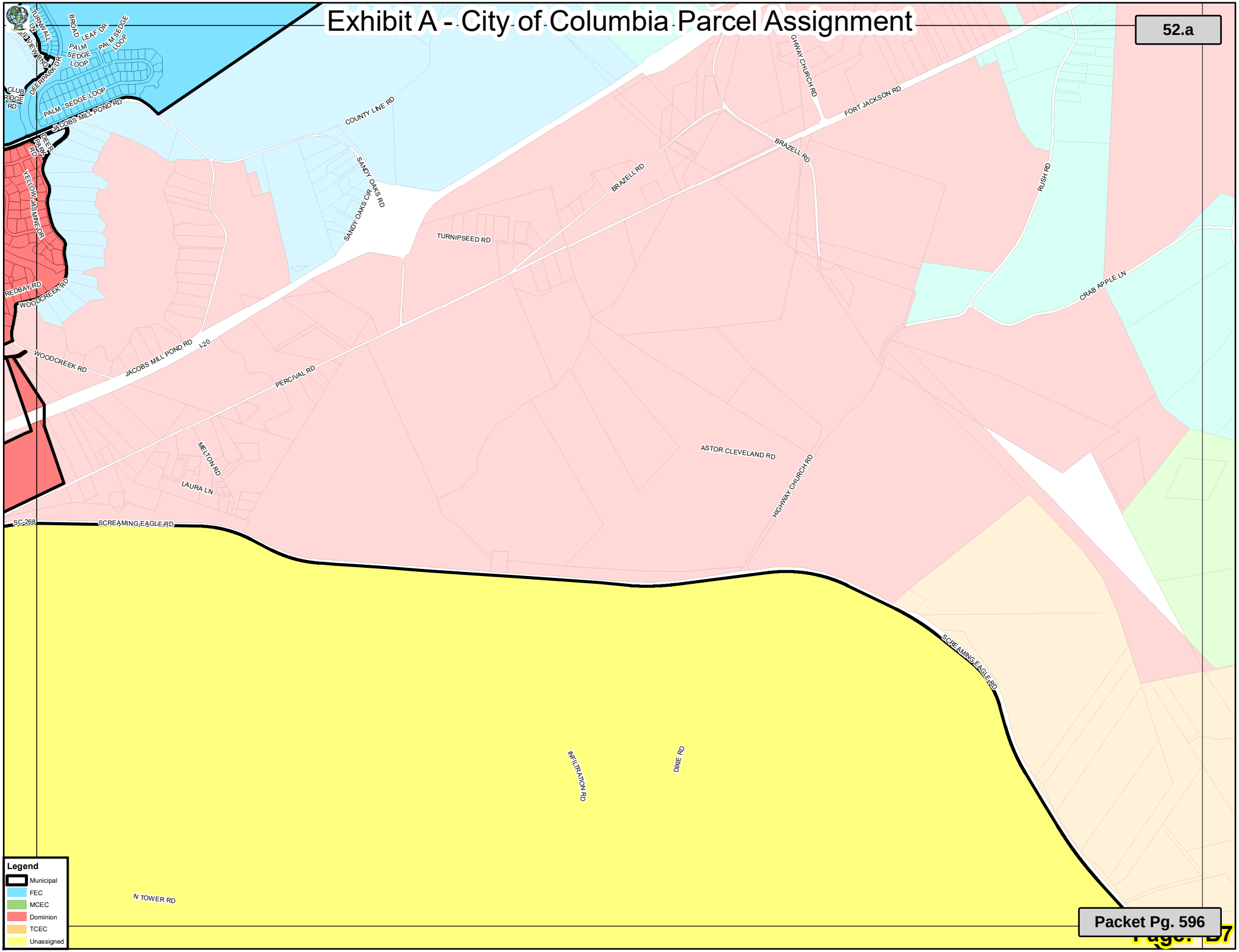

Exhibit A - City of Columbia Parcel Assignment

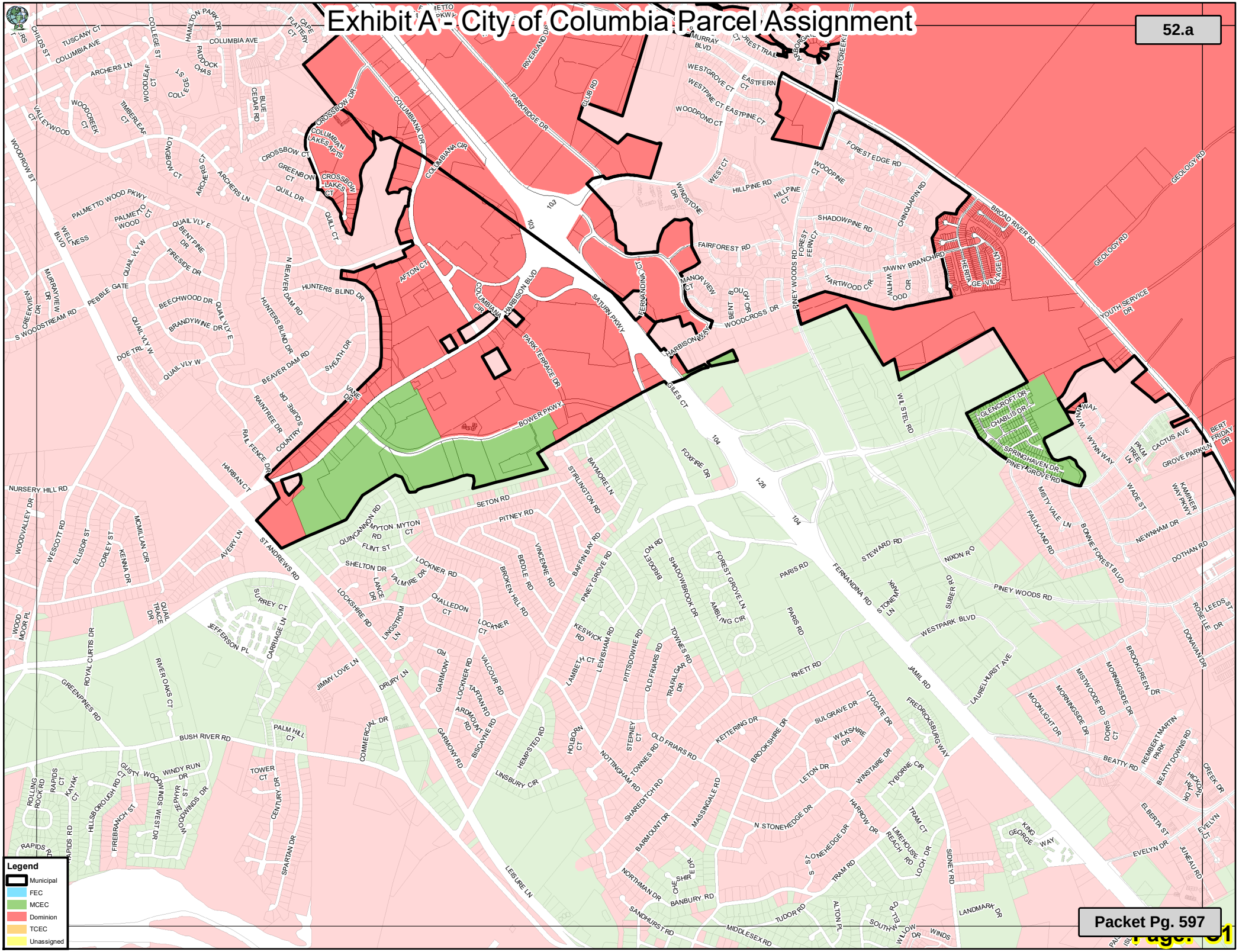

Exhibit A - City of Columbia Parcel Assignment

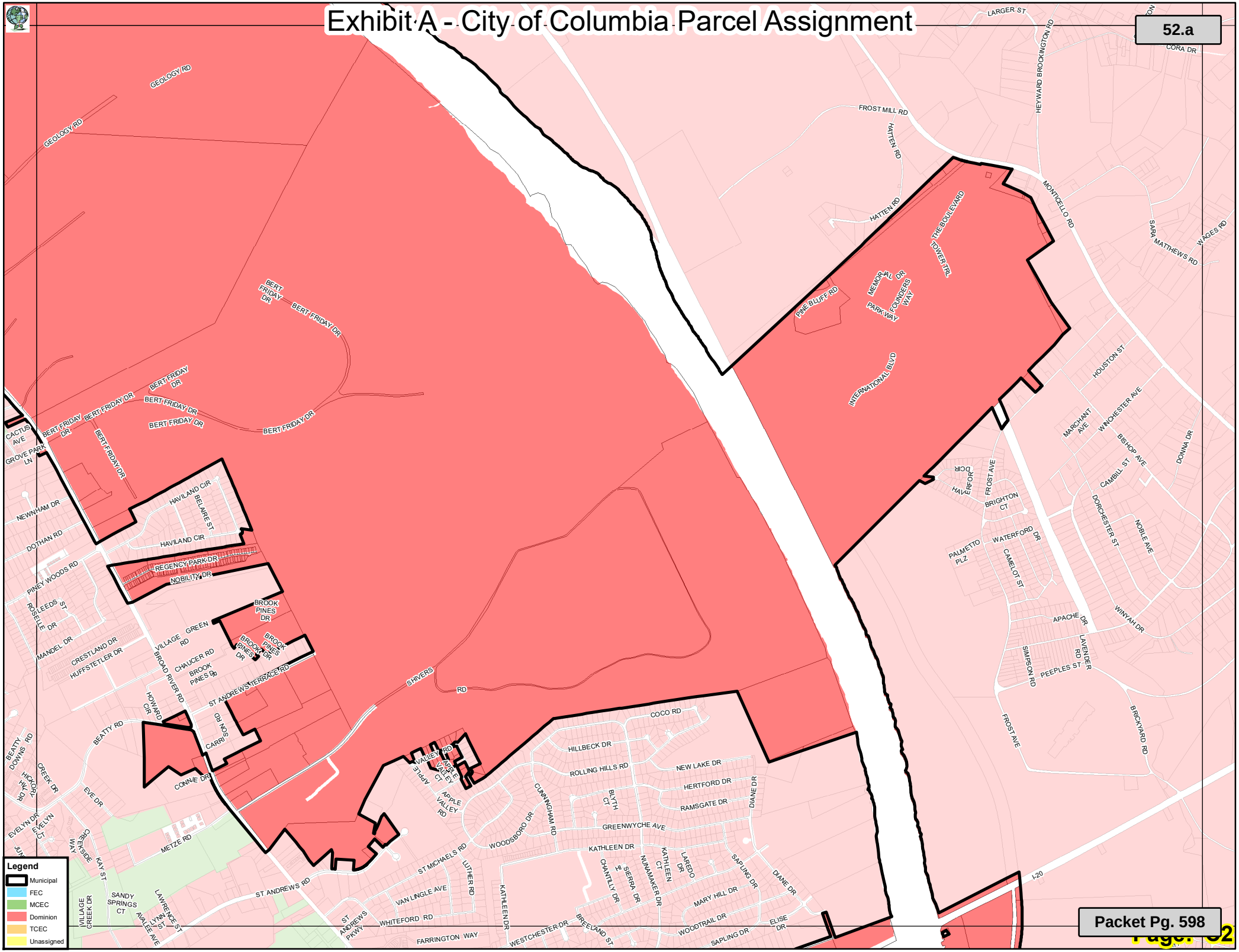

Exhibit A - City of Columbia Parcel Assignment

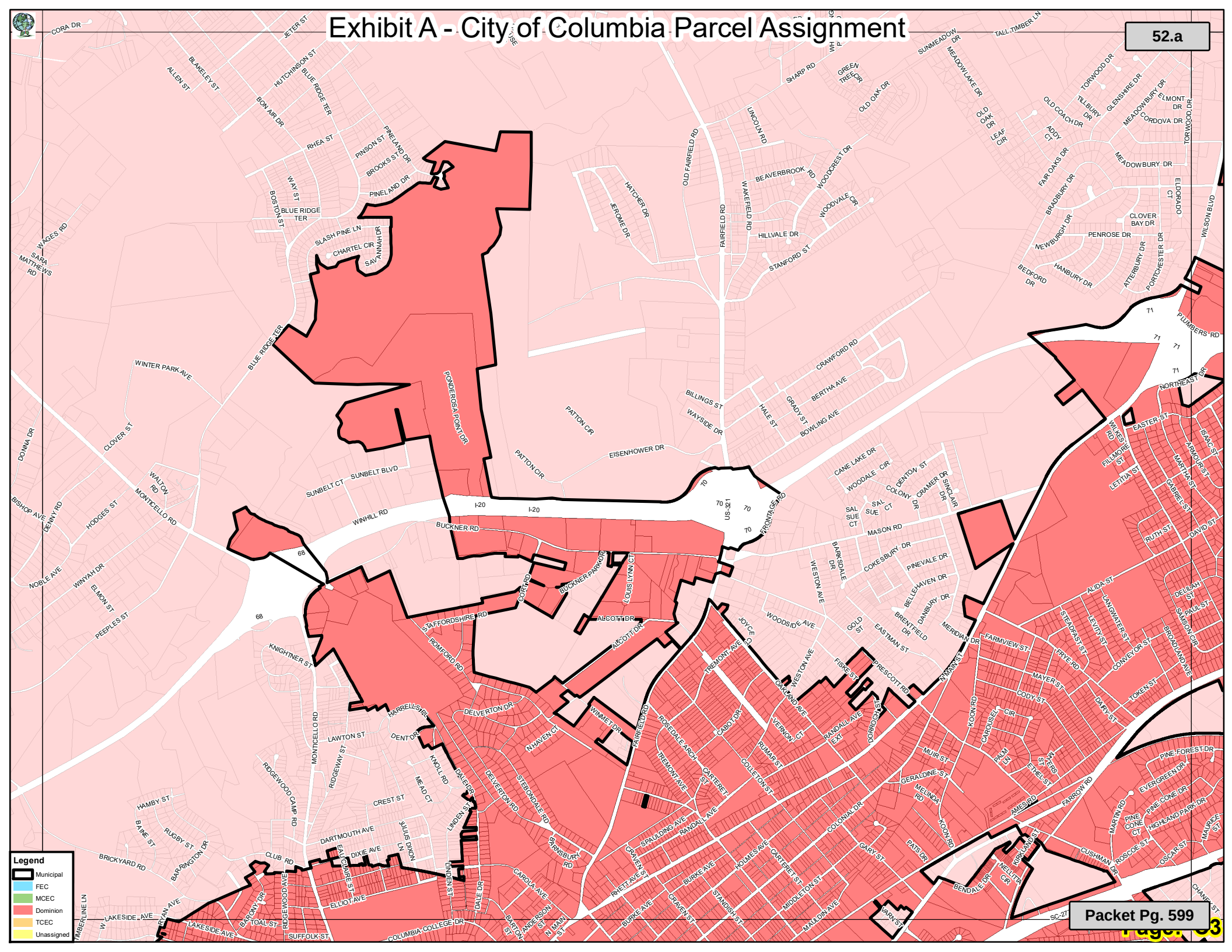

Exhibit A - City of Columbia Parcel Assignment

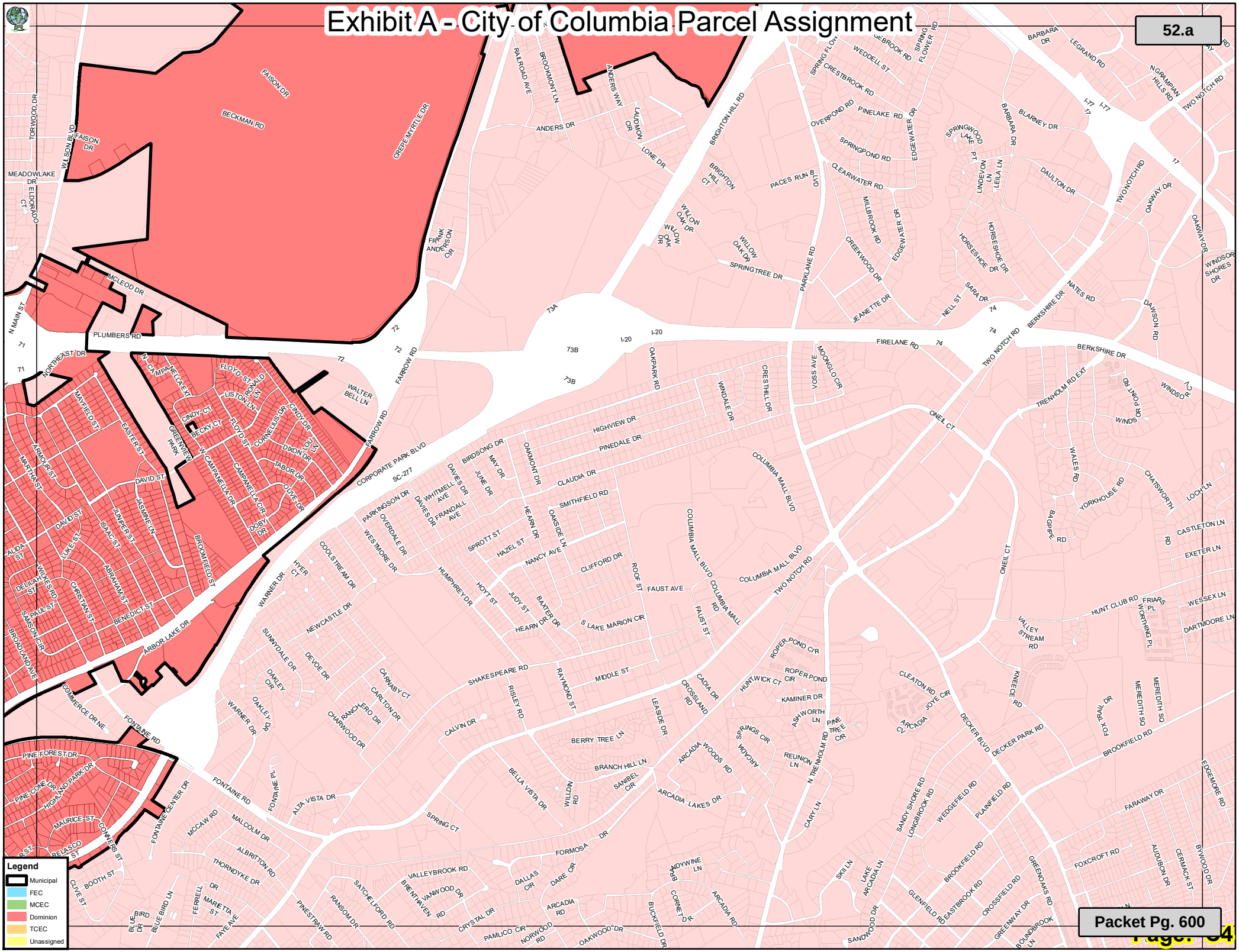

Exhibit A - City of Columbia Parcel Assignment

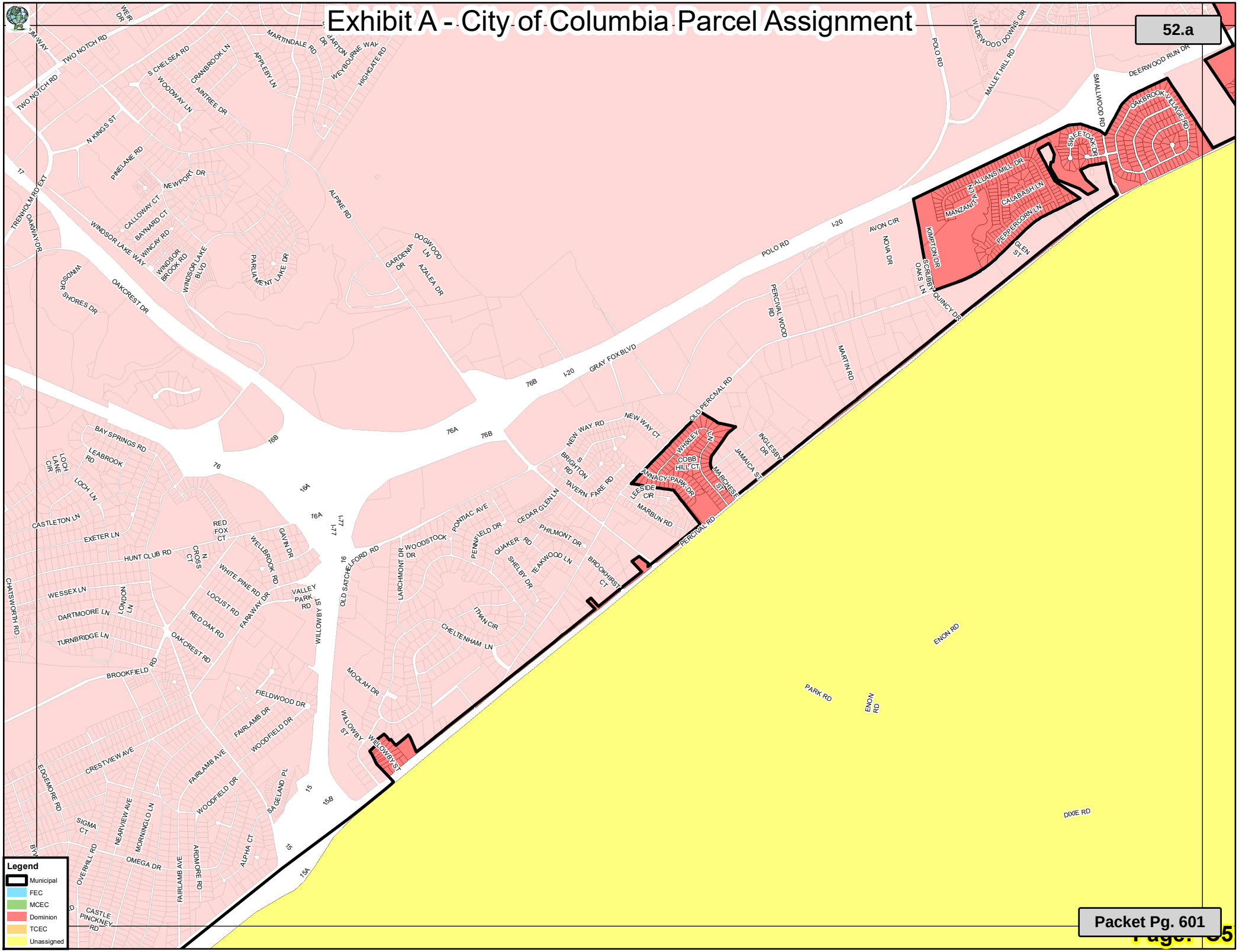

Exhibit A - City of Columbia Parcel Assignment

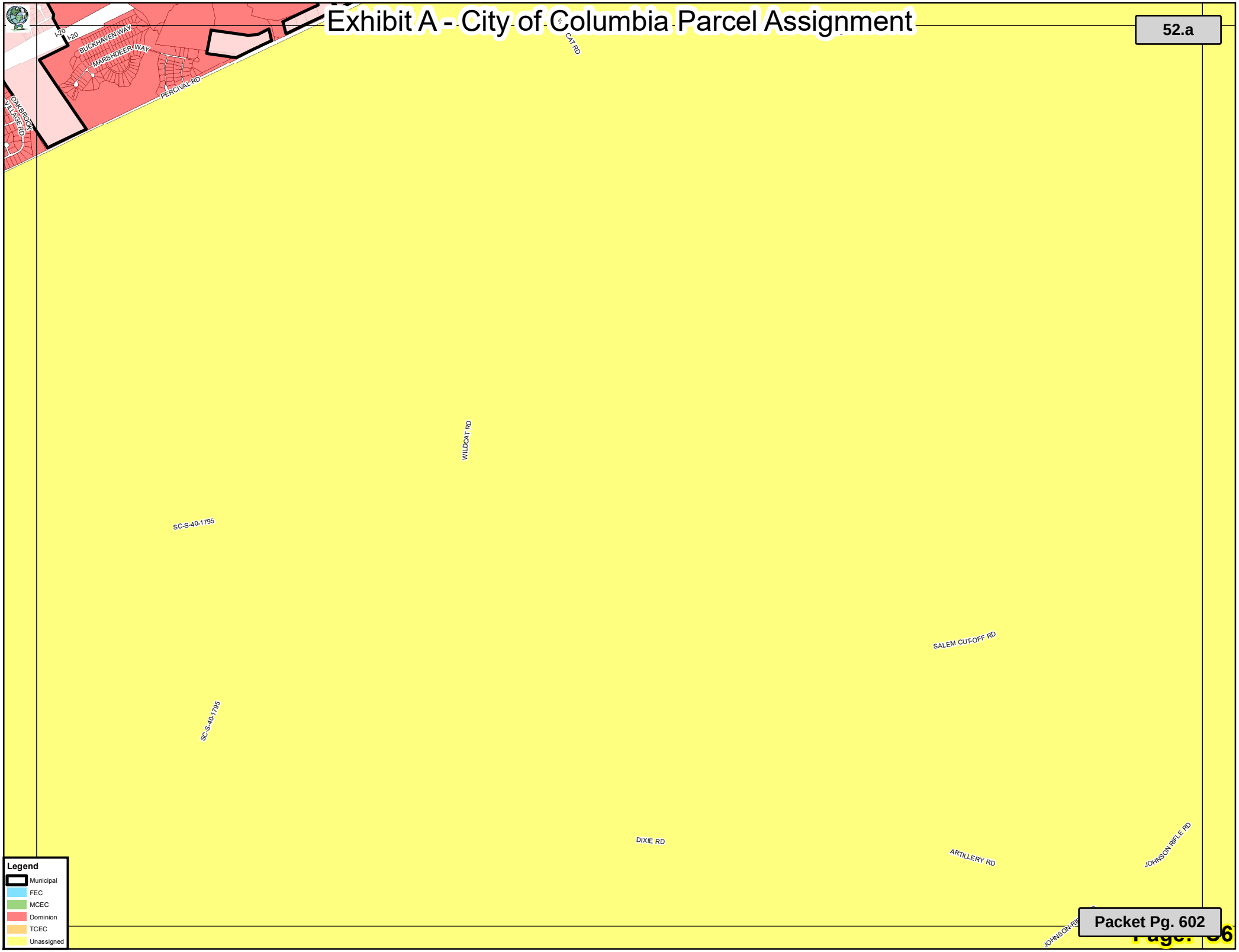

Exhibit A - City of Columbia Parcel Assignment

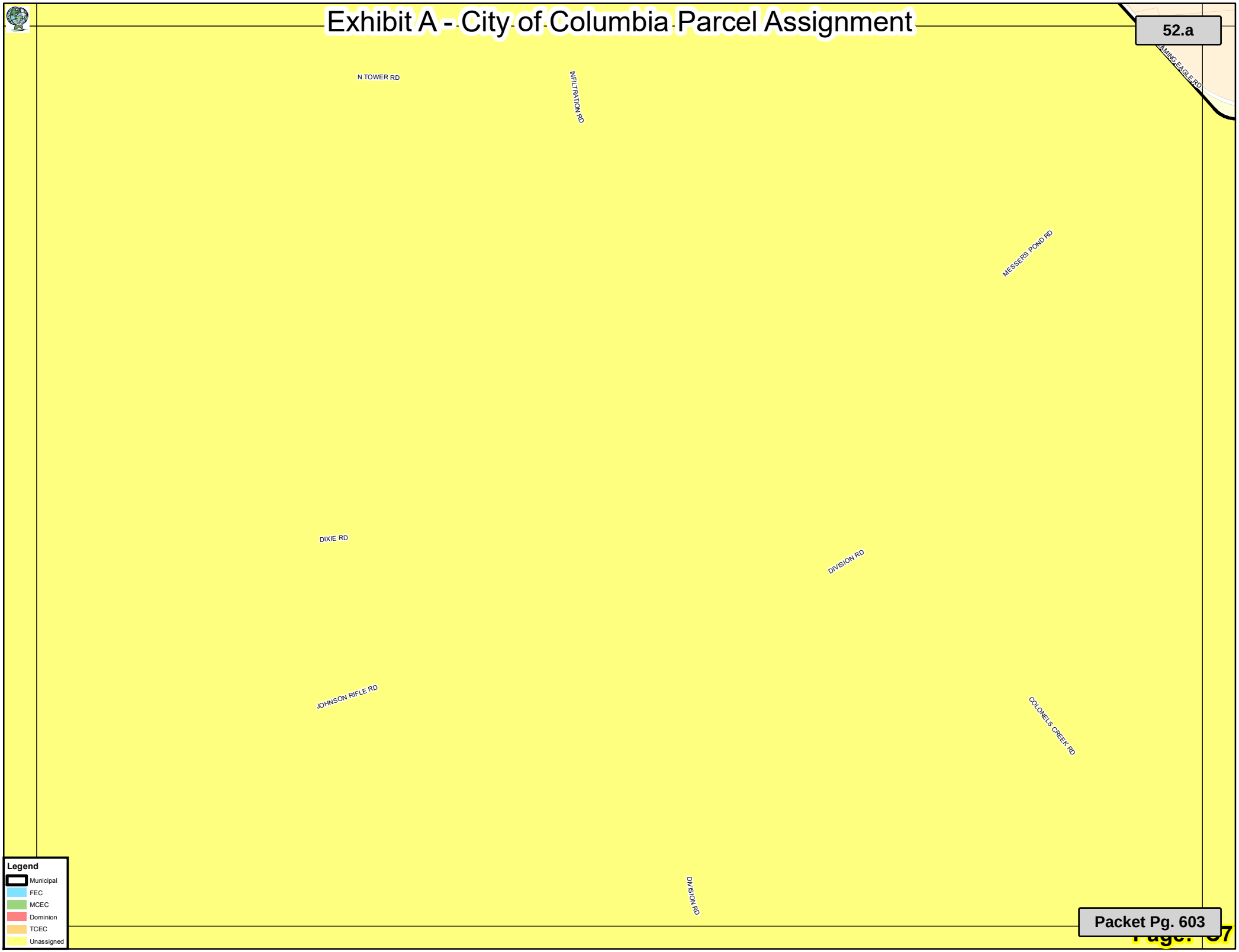

Exhibit A - City of Columbia Parcel Assignment

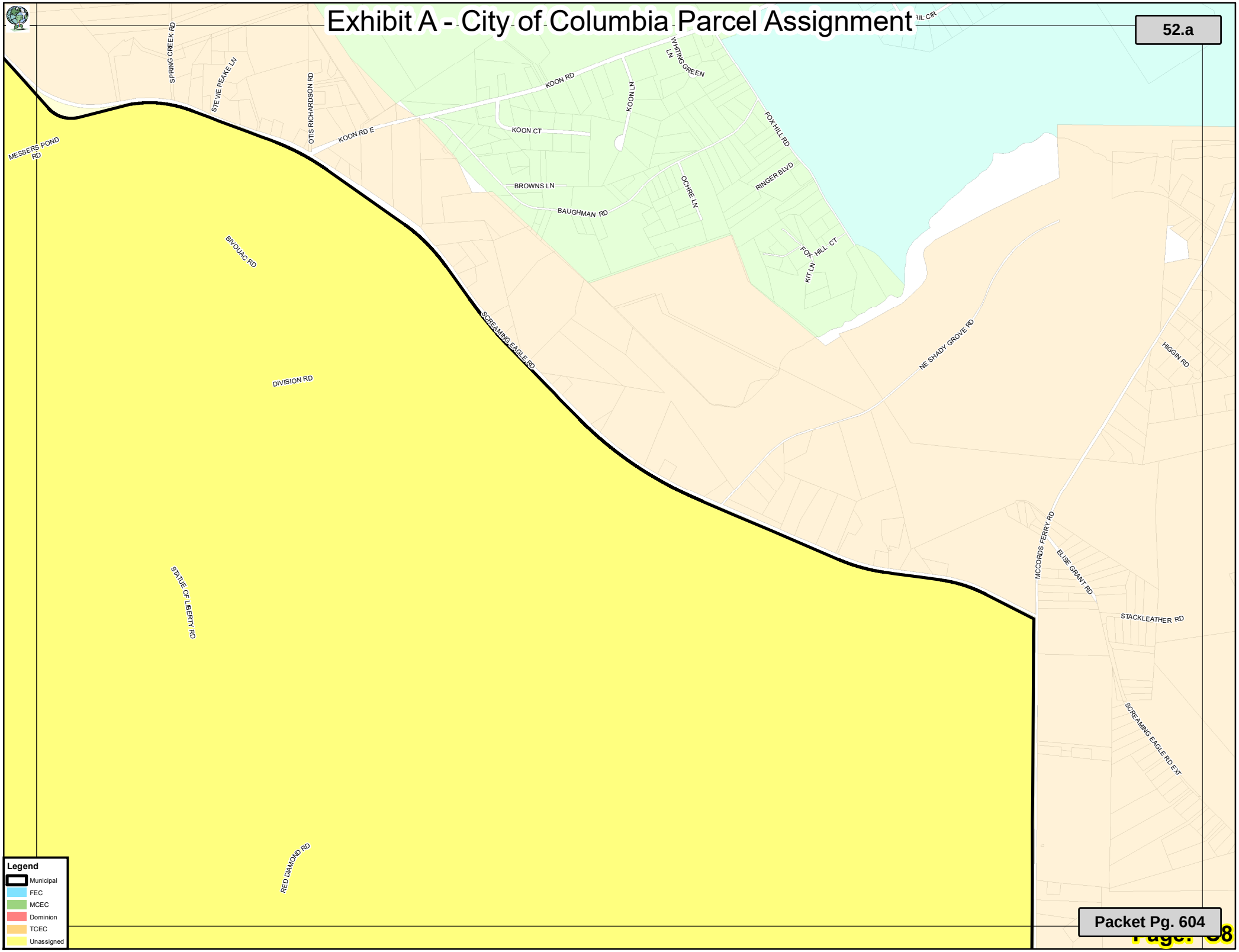

Exhibit A - City of Columbia Parcel Assignment

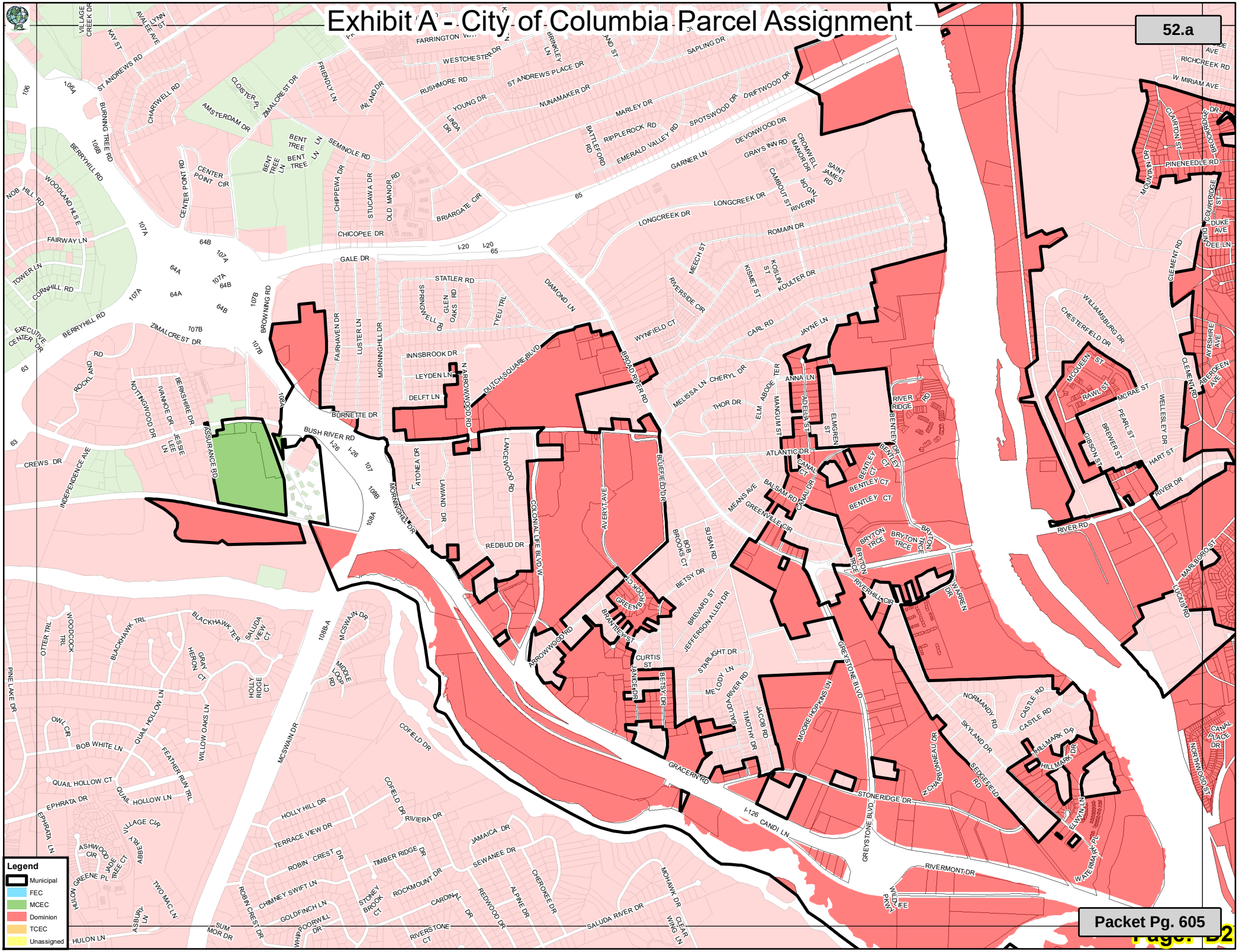

Exhibit A - City of Columbia Parcel Assignment

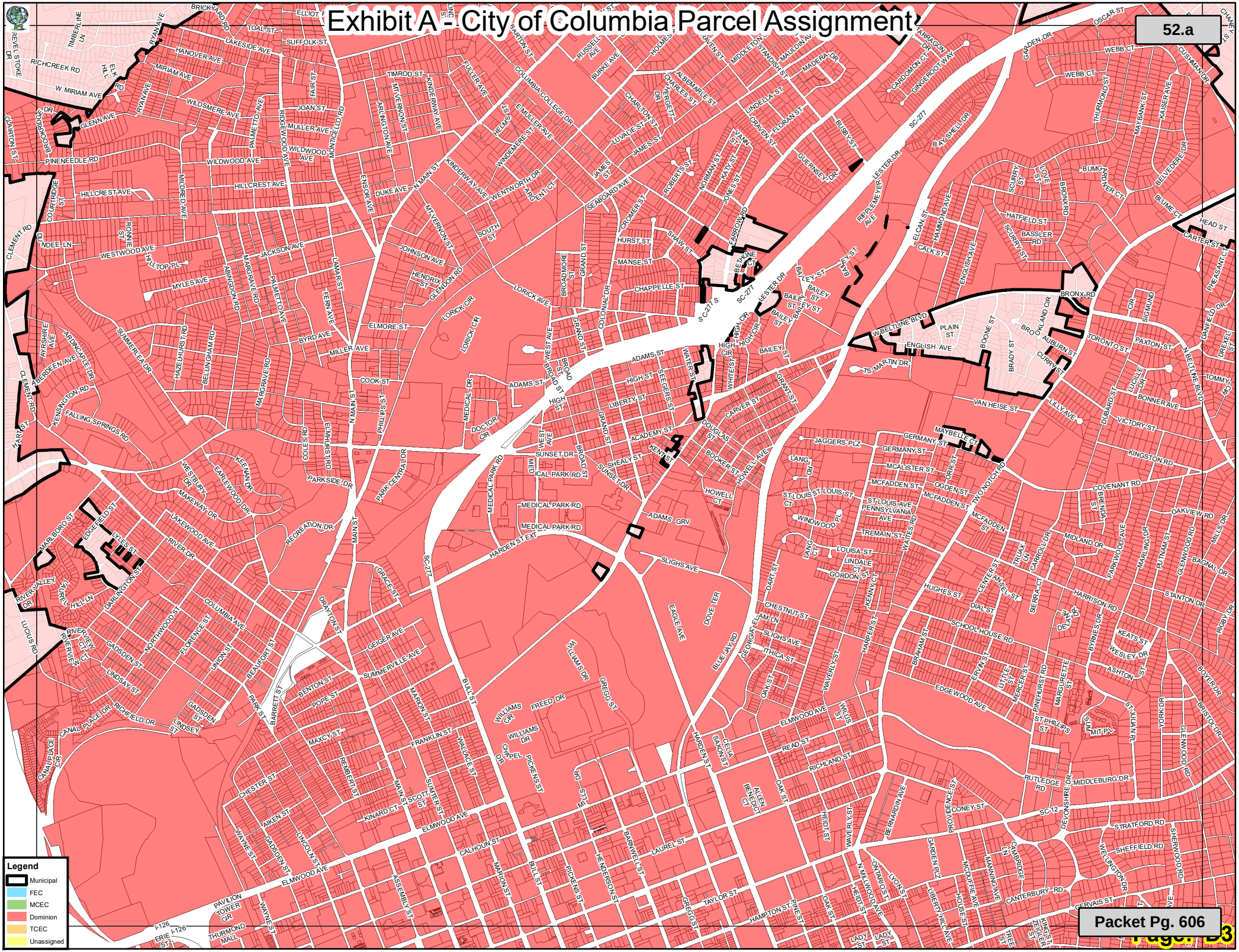

Exhibit A - City of Columbia Parcel Assignment

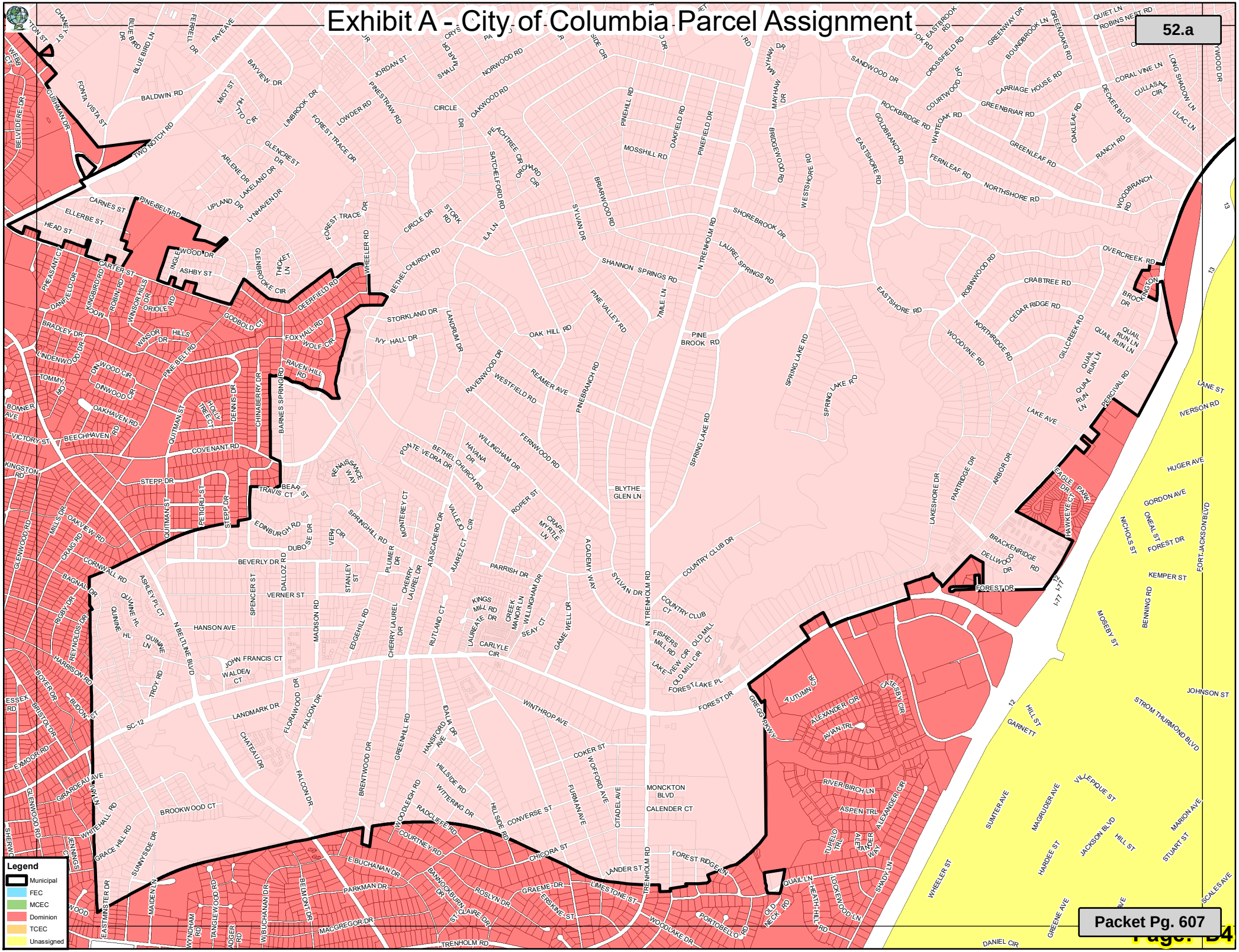

Exhibit A - City of Columbia Parcel Assignment

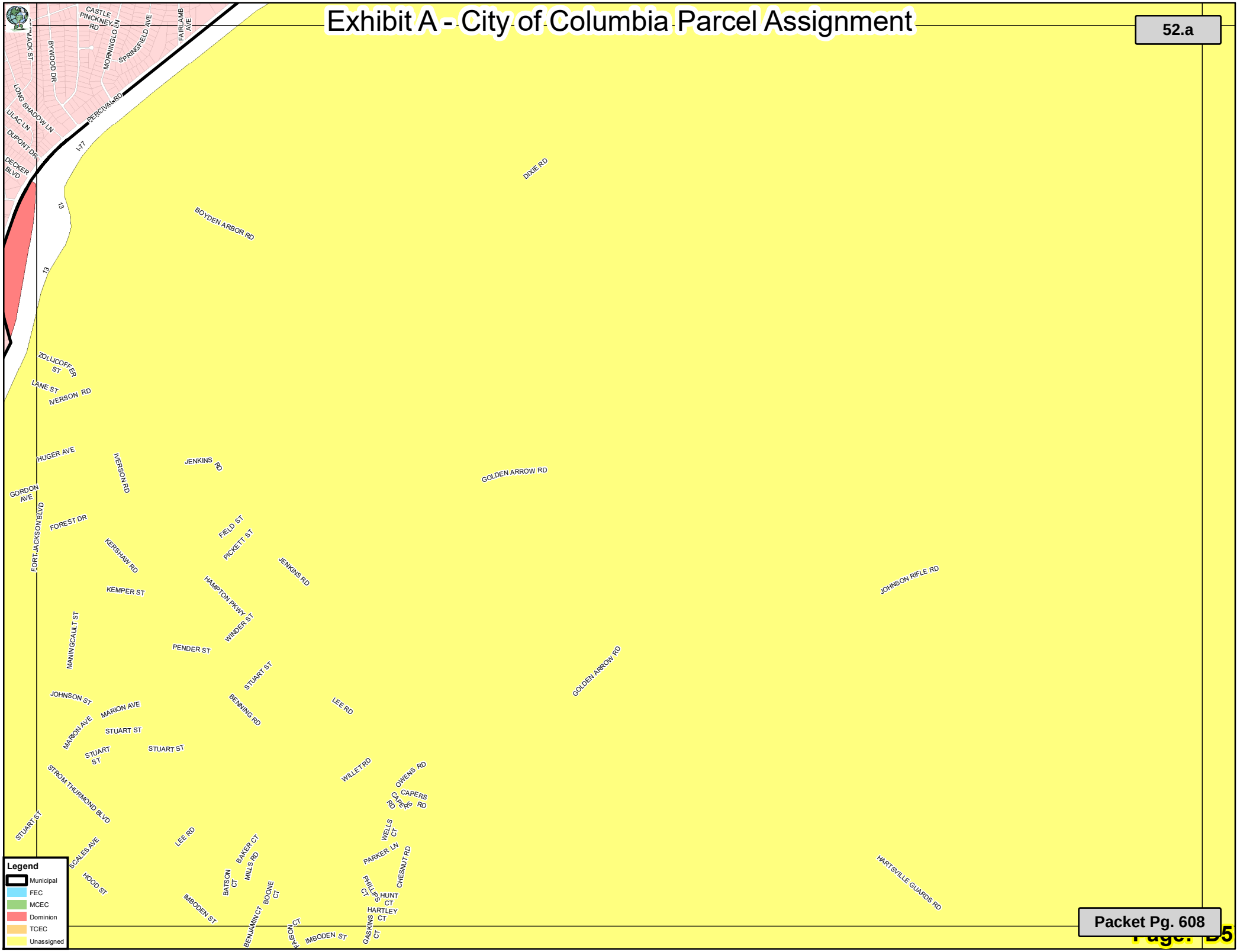

Exhibit A - City of Columbia Parcel Assignment

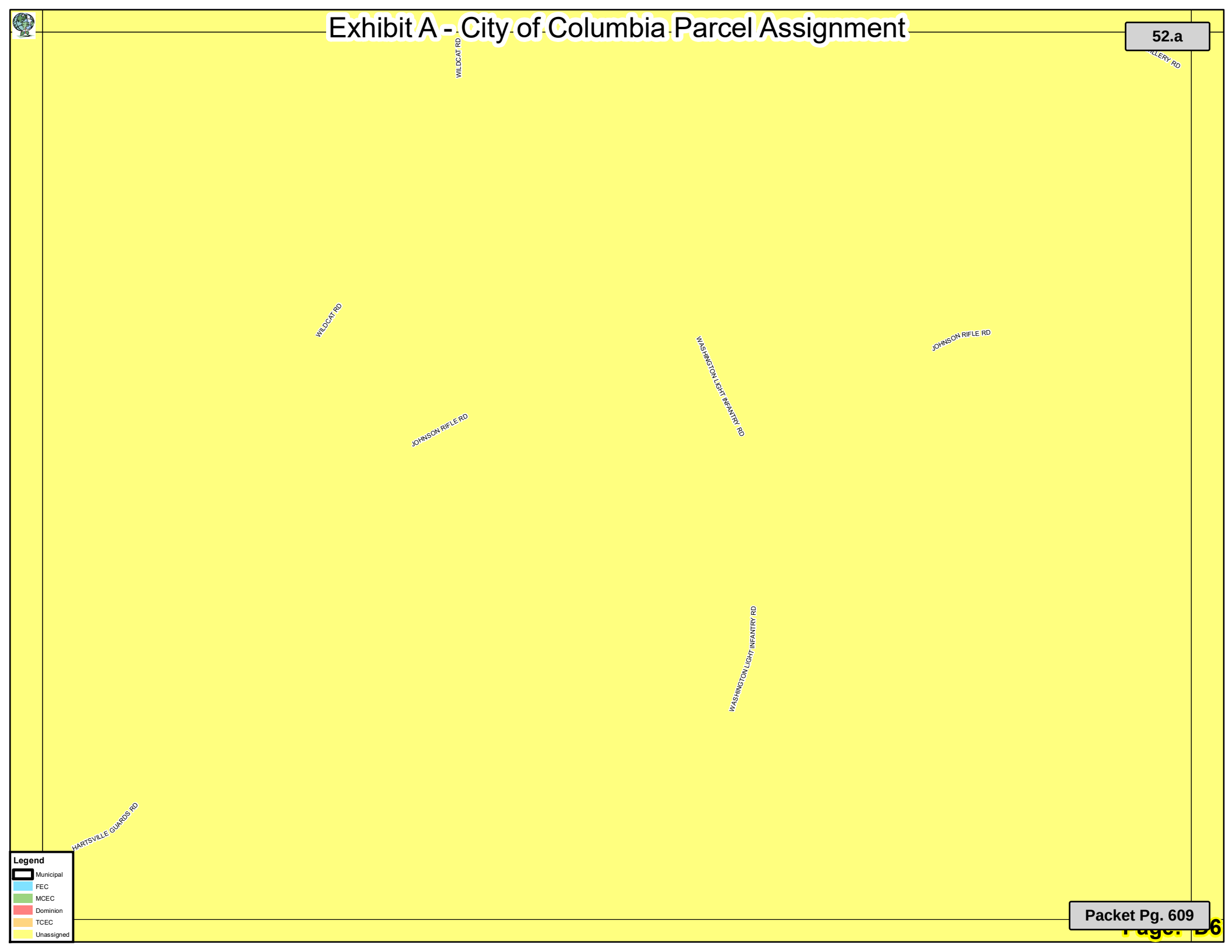

Exhibit A - City of Columbia Parcel Assignment

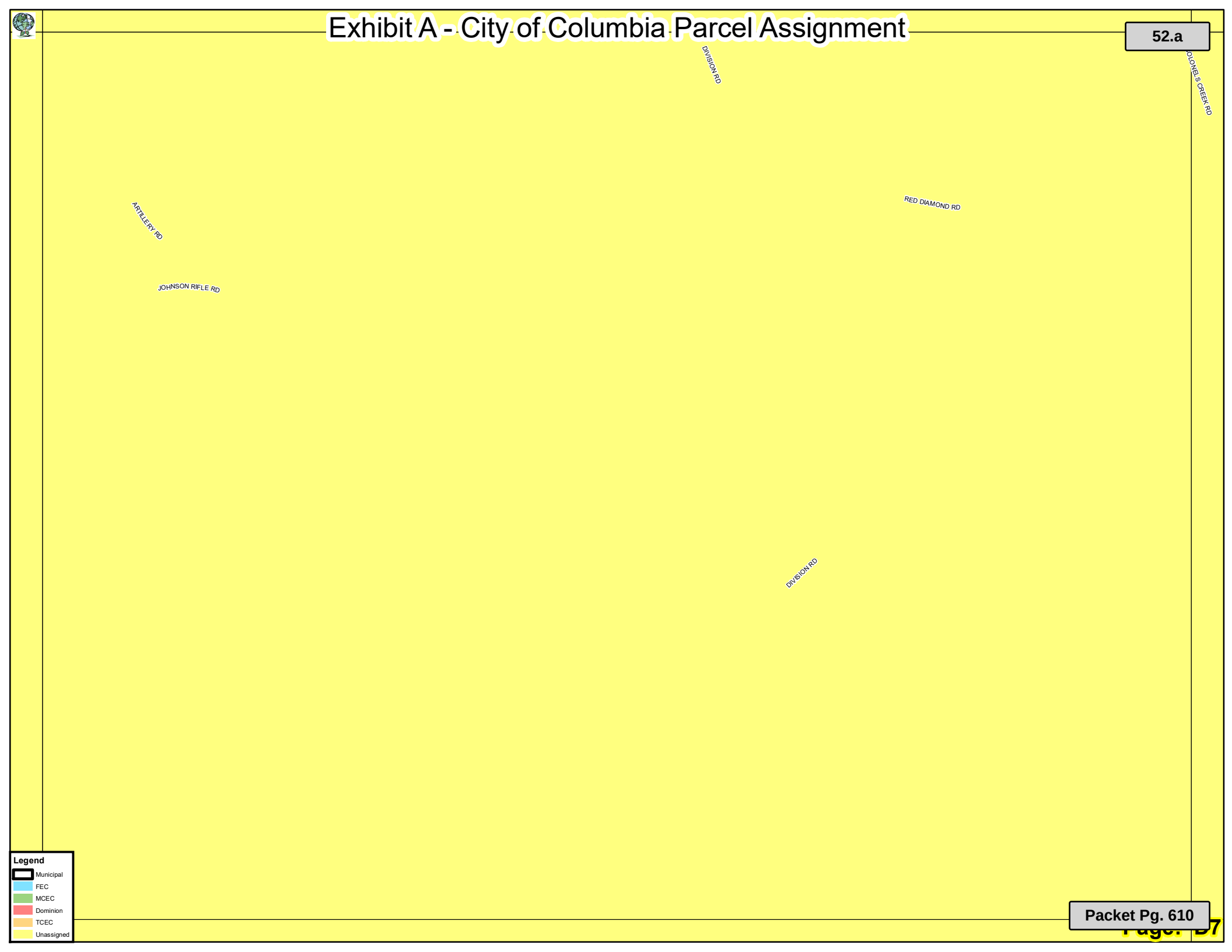

Exhibit A - City of Columbia Parcel Assignment

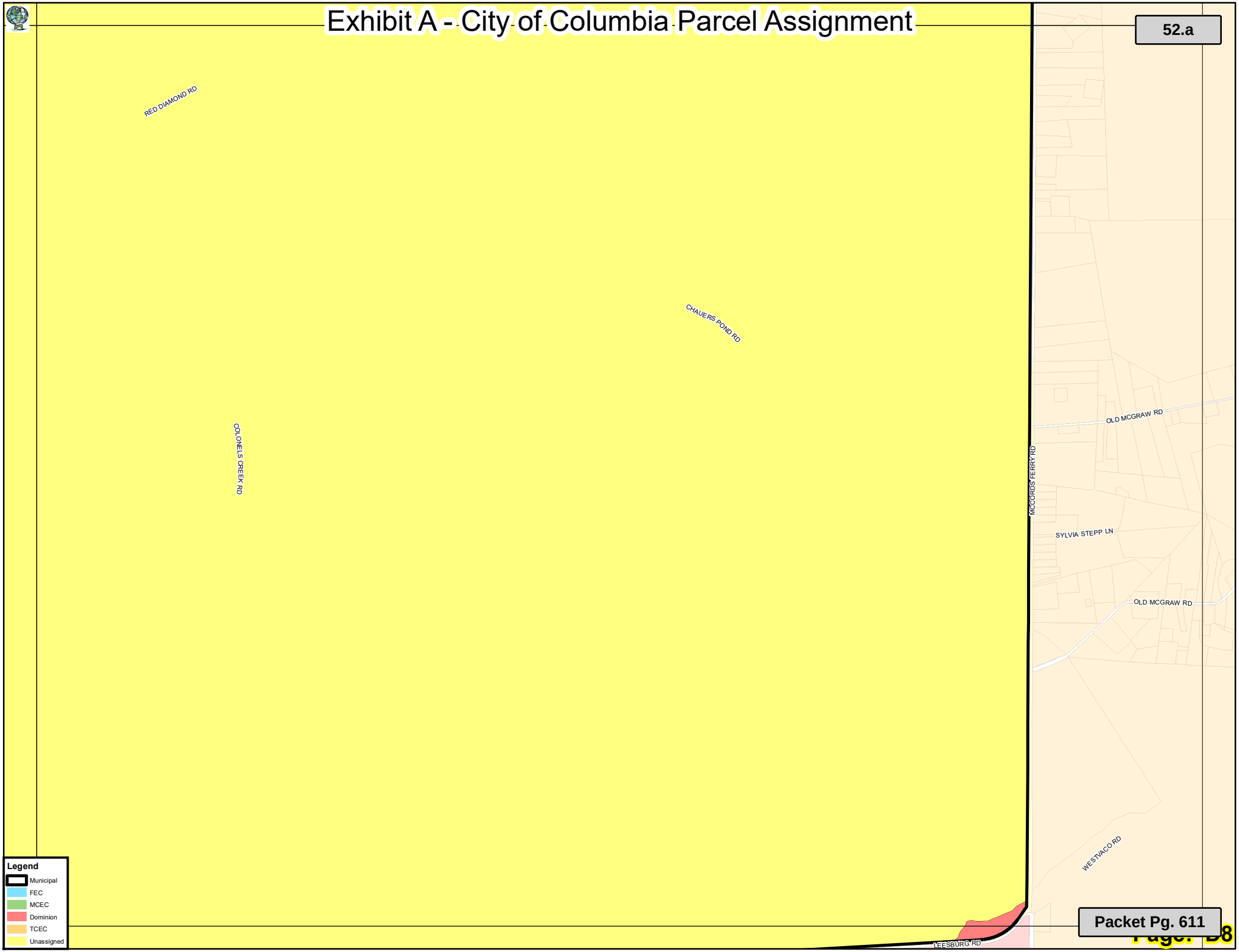

Exhibit A - City of Columbia Parcel Assignment

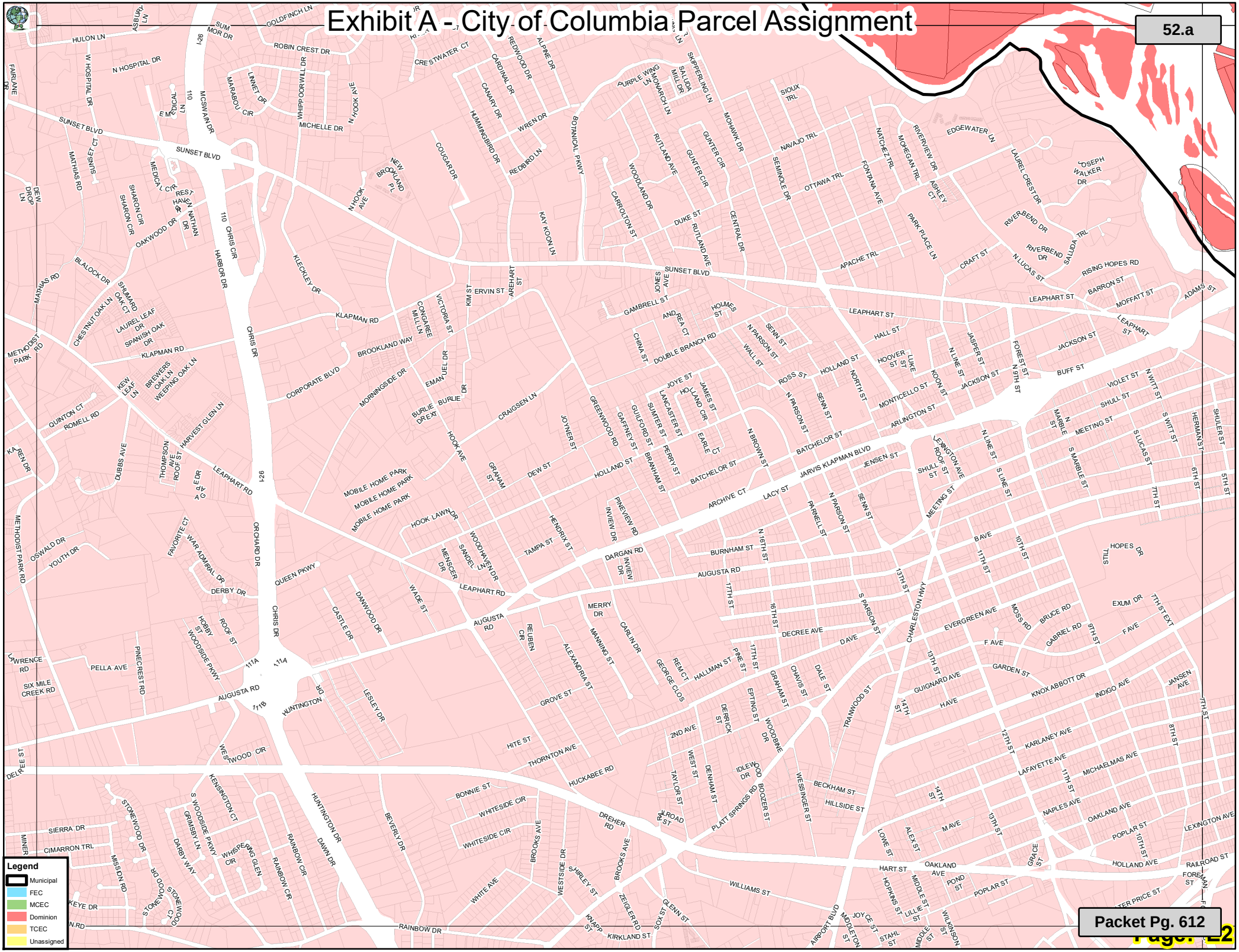

Exhibit A - City of Columbia Parcel Assignment

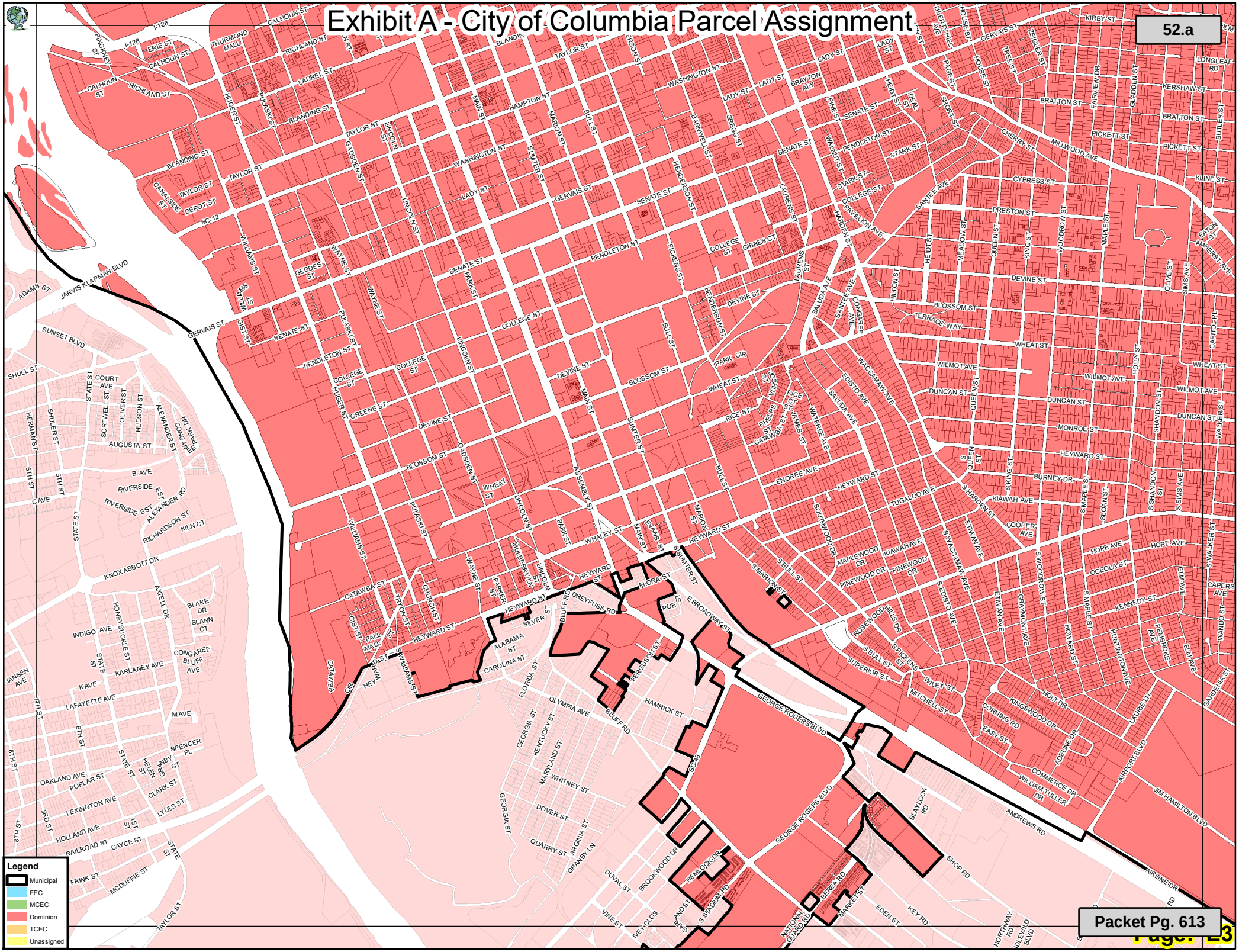

Exhibit A - City of Columbia Parcel Assignment

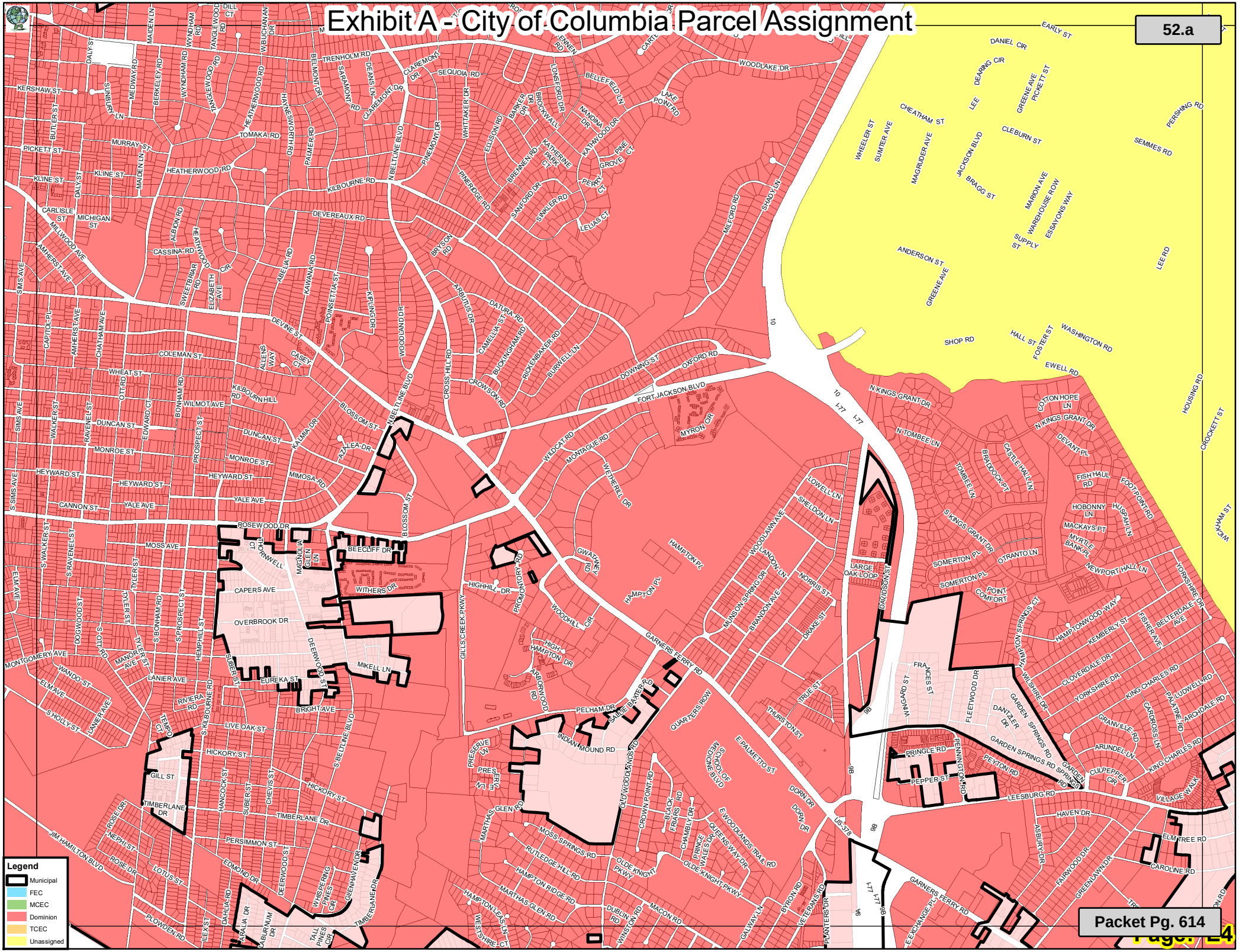

Exhibit A - City of Columbia Parcel Assignment

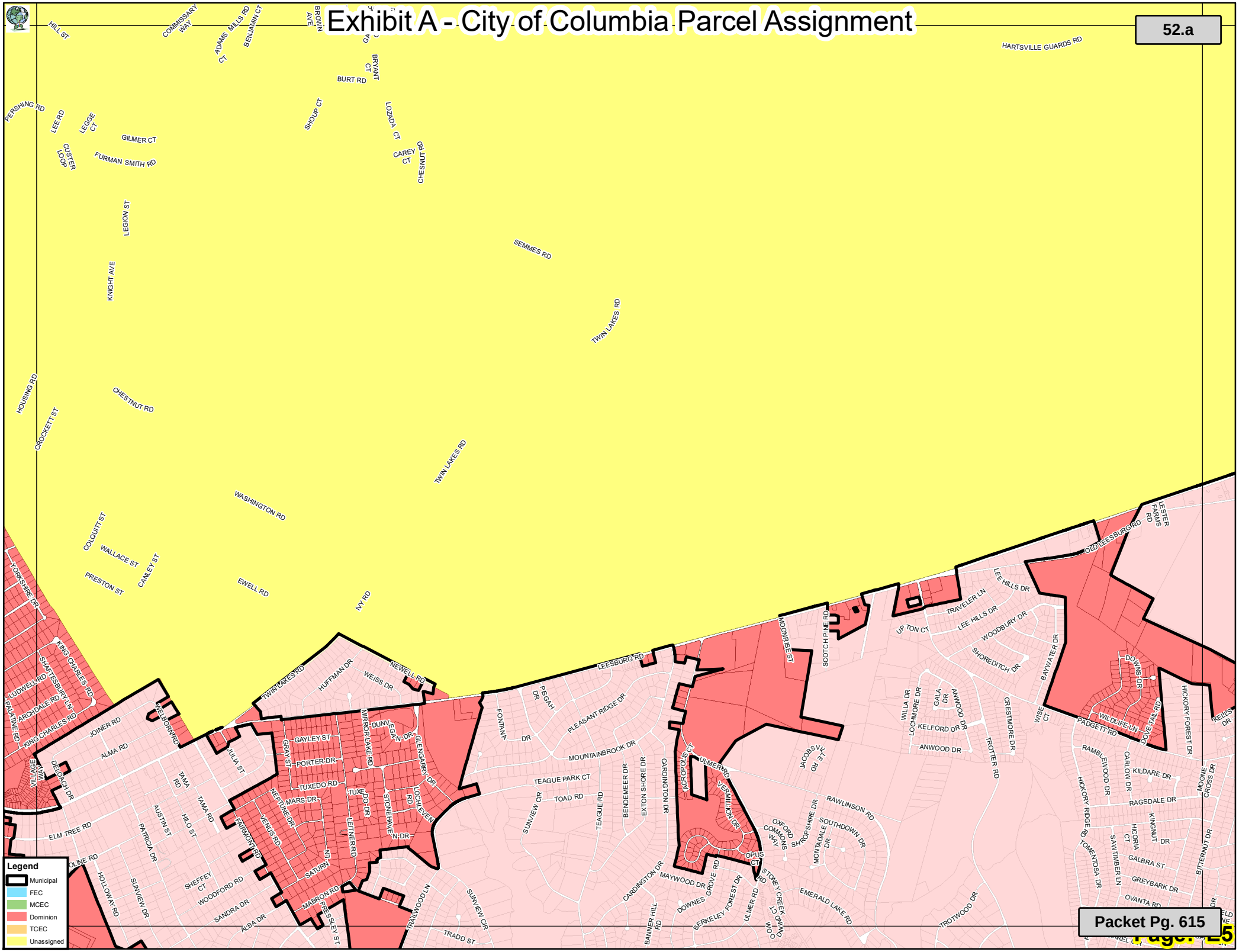

Exhibit A - City of Columbia Parcel Assignment

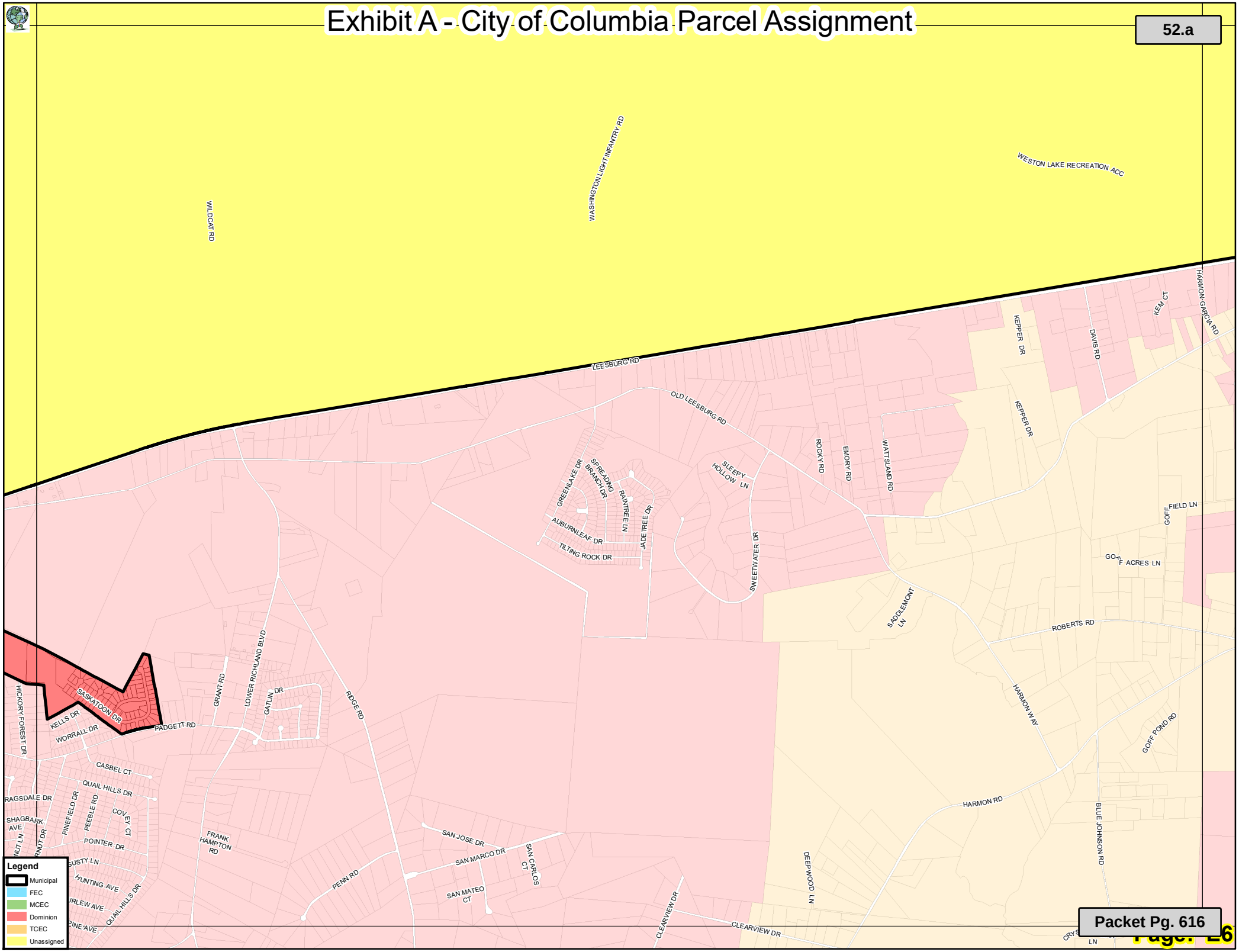

Exhibit A - City of Columbia Parcel Assignment

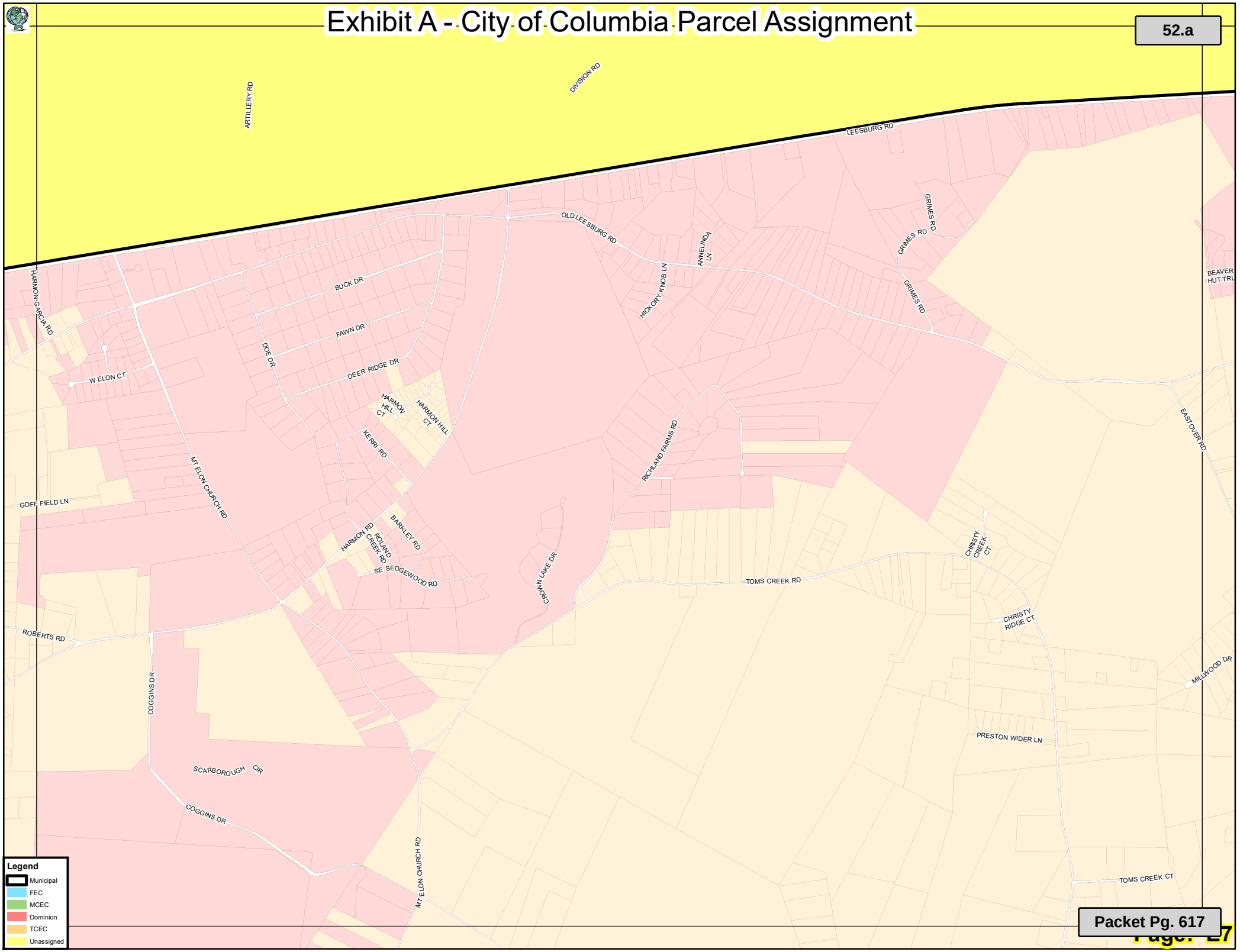

Exhibit A - City of Columbia Parcel Assignment

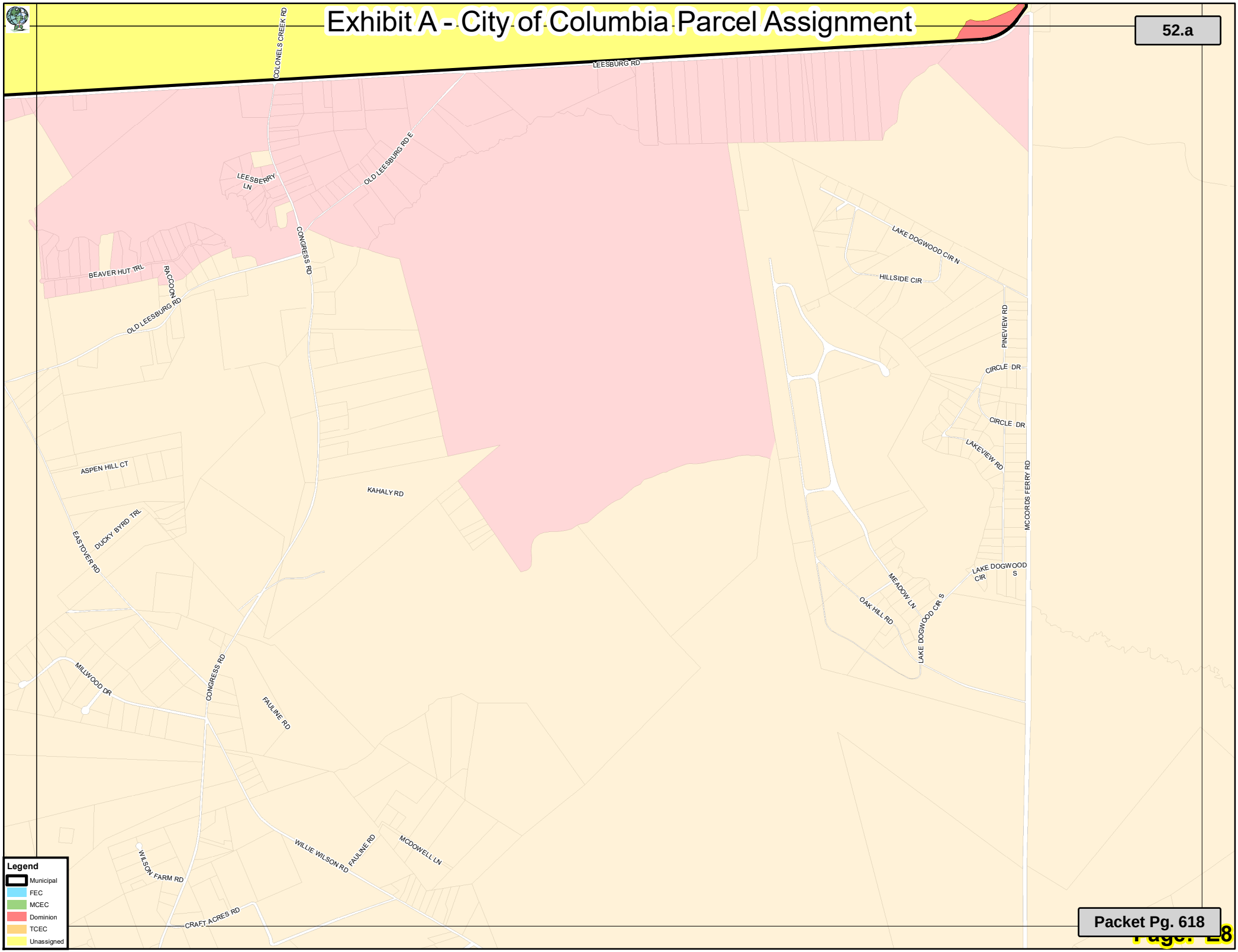

Exhibit A - City of Columbia Parcel Assignment

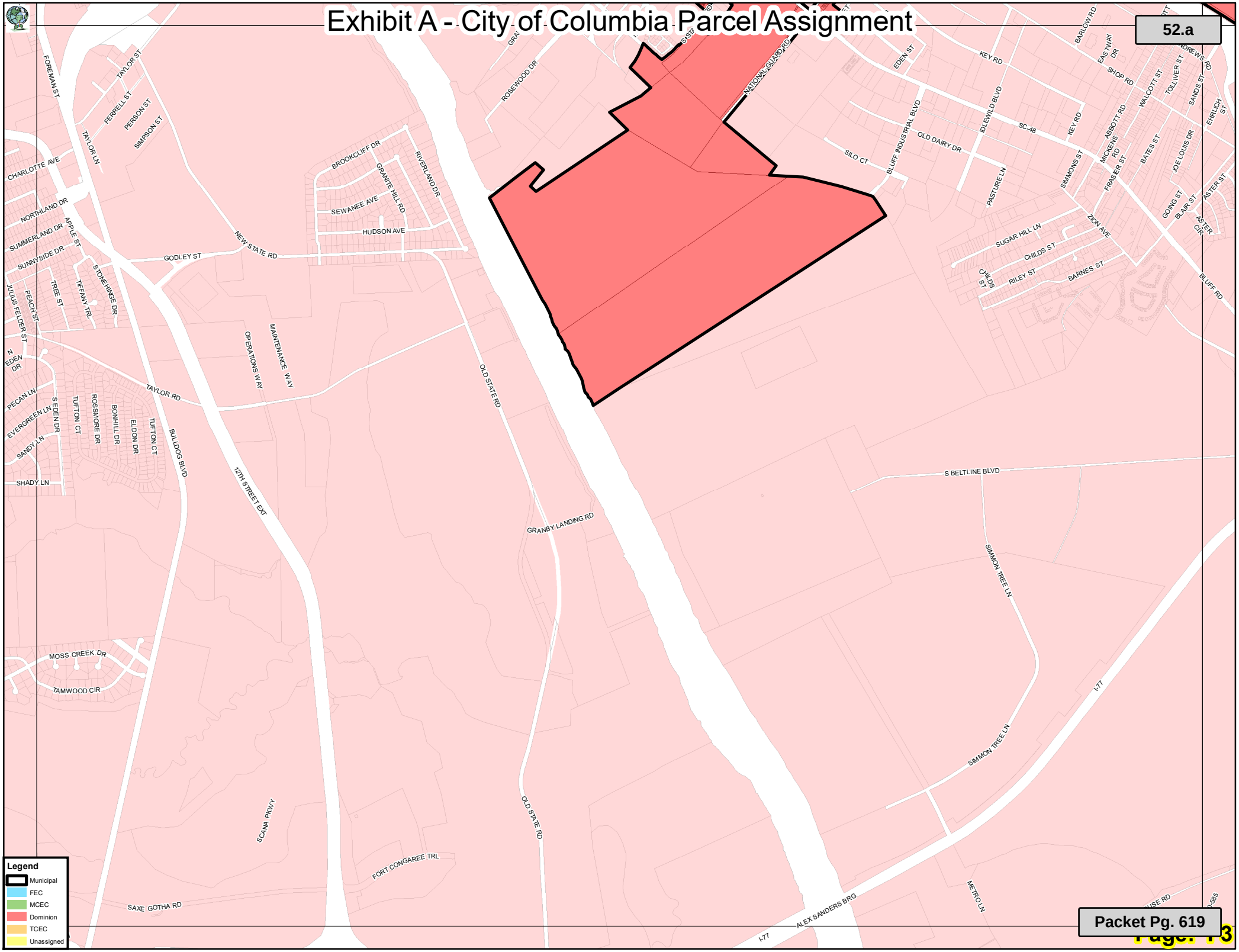

Exhibit A - City of Columbia Parcel Assignment

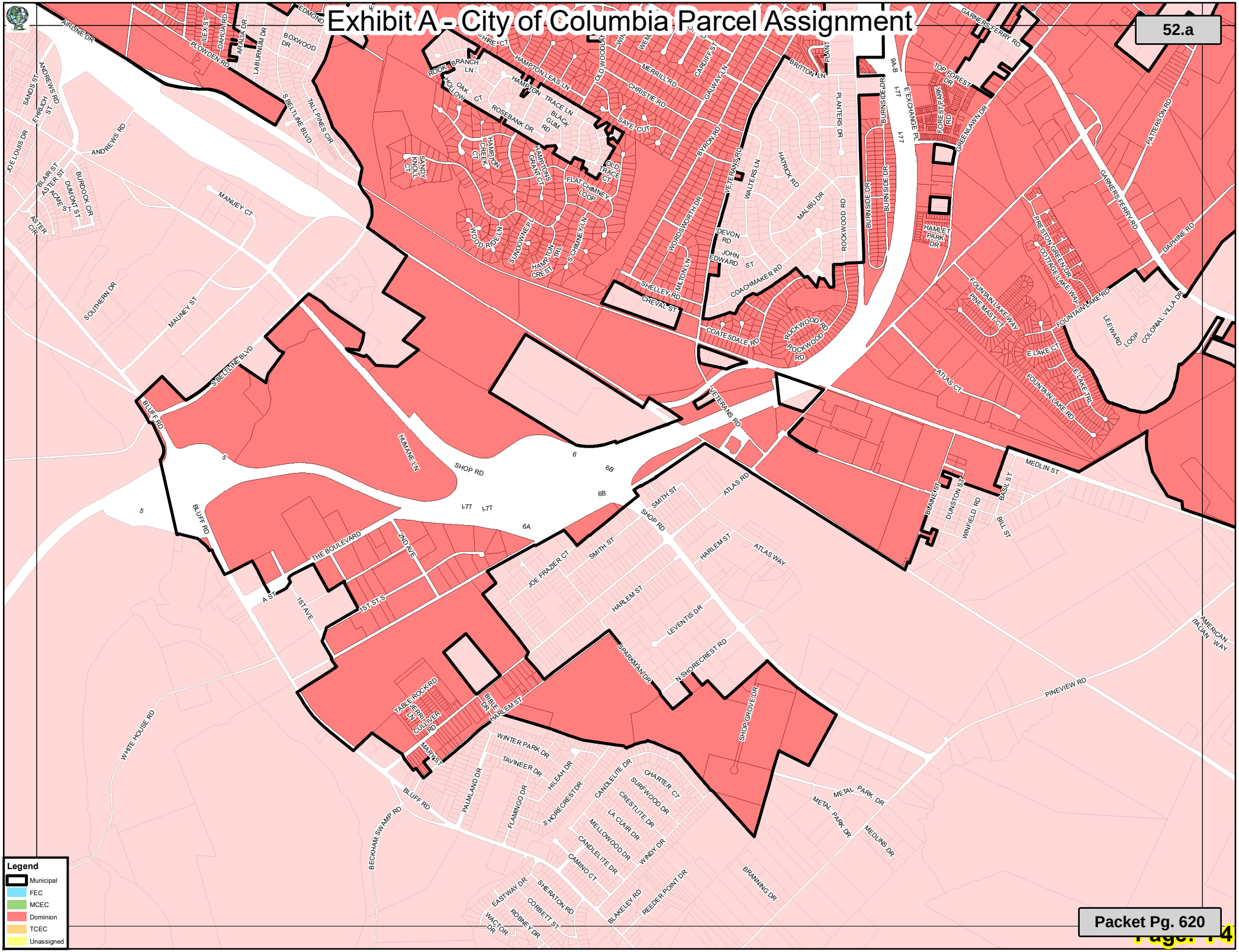

Exhibit A - City of Columbia Parcel Assignment

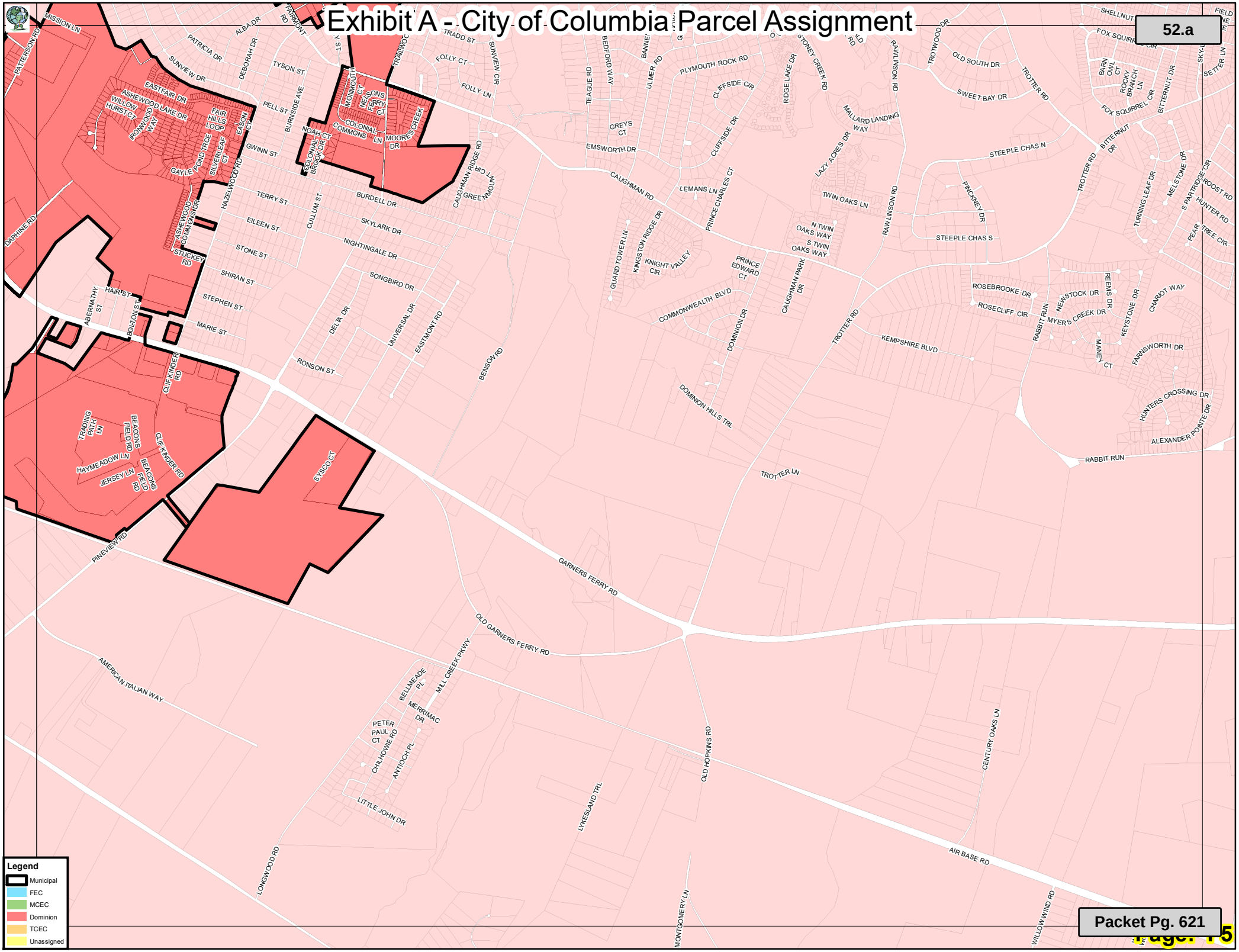

RESOLUTION NO.: R-2019-097

Authorizing Condemnation for Easement Acquisition for Sanitary at 4112 West Beltline Boulevard and Brookland Circle to Eliminate the Old Food Lion Pump Station; Richland County TMS#11613-13-03, n/f Landers Commercial, LLC; CIP Project #SS7323; CF#250-429 (Easement 5 of 11)

WHEREAS, the City's Department of Engineering has identified this capital improvements project as part of the CW2020 sanitary sewer system improvements required to upgrade the existing the sanitary sewer system, to eliminate an old insufficient sewer pump station and to provide sanitary sewer service in this area to meet customer demands; and,

WHEREAS, City of Columbia's staff has made numerous attempts to negotiate for acquisition of the easements for this project, but have been unable to come to a negotiated resolution; NOW, THEREFORE,

BE IT RESOLVED by the Mayor and City Council this ___ day of _____, 2019, that it has been determined that for the public purpose of constructing the sanitary sewer main project and for the benefit of upgrading the sanitary sewer system, it is necessary to acquire easements on portions of the property described below and shown on Exhibit "A" attached hereto and incorporated herein by reference. Based upon an appraisal, it has been determined that the total just compensation is $0.00. The City Attorney is authorized to offer that amount to the Landowners in exchange for granting the referenced easements, if the Landowner does not accept within ten (10) days of the offer, the City Attorney is authorized to commence an action for acquisition of the easements by eminent domain.

Owners:	TMS# & Location:	Easement Description:	Appraised Value:
Landers Commercial, LLC	4112 West Beltline Boulevard Columbia, SC 29204	Permanent, Exclusive Easement Twenty (20) Feet in Width (0.03 Acre) Exhibit "A" Temporary Easement Thirty (30) Feet in Width Exhibit "A"	$0.00

Requested by:

Assistant City Manager Shealy

_____
Mayor

Approved by:

_____
City Manager

Approved as to form:

_____
Senior Assistant City Attorney

ATTEST:

_____
City Clerk

Introduced:
Final Reading:

Last revised: 11/12/2019
19003440

EXHIBIT "A"

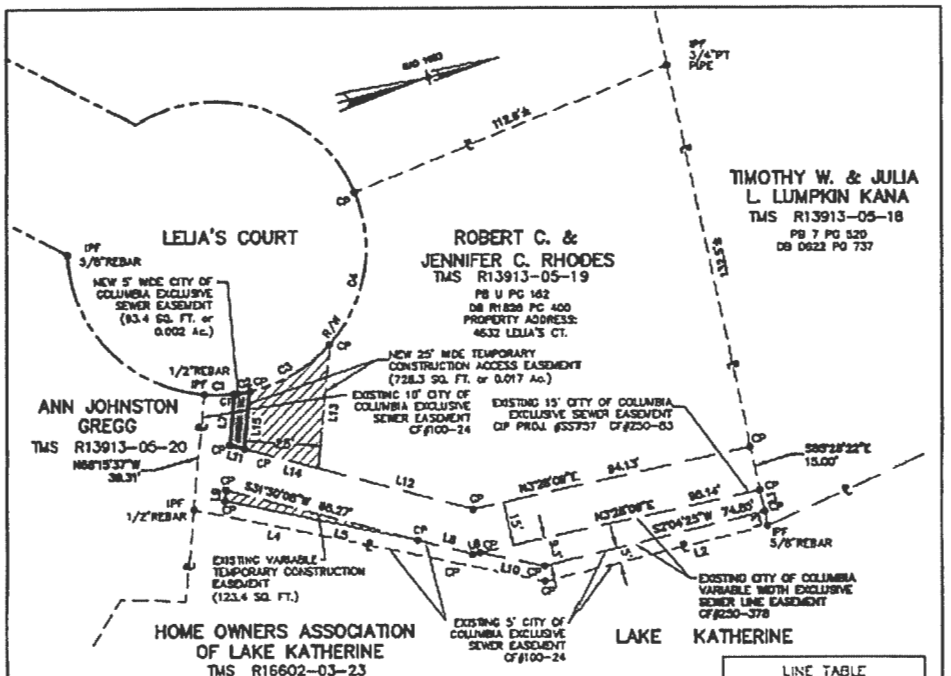

CURVE TABLE					
CURVE No.	ARC	RADIUS	DELTA	CHORD BEARING	CHORD DIST.
C1	10.08	50.00	11.55	N15°14'50"E	10.06
C2	5.16	50.00	5.94	N5°30'03"E	5.16
C3	31.54	49.58	36.45	N14°32'08"W	31.01
C4	55.19	50.00	63.24	N54°17'44"W	52.43

LINE TABLE		
LINE No.	DISTANCE	BEARING
L1	7.49	S85°28'22"E
L2	75.80	S2°04'25"W
L3	5.00	N85°28'22"W
L4	130.10	S28°15'16"W
L5	65.73	S28°15'16"W
L6	3.59	N3°28'09"E
L7	17.56	N58°15'37"W
L8	19.17	N31°30'08"E
L9	3.78	N58°15'37"W
L10	22.22	N28°13'16"E
L11	5.07	N31°30'08"E
L12	53.83	N31°30'08"E
L13	42.43	S58°15'37"E
L14	25.37	S31°30'08"W
L15	19.78	S58°15'37"E

THIS EXHIBIT BASED ON UTILITY LINE SURVEY AND FROM MAP COMPILATIONS. NO PROPERTY SURVEY PERFORMED.

REFERENCE: RICHLAND COUNTY TAX MAP R13913-05-19 2018 EDITION.

0' 20' 40' 80'
GRAPHIC SCALE

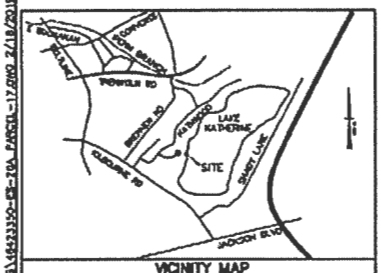

VICINITY MAP
N.T.S.

LEGEND
- IPF ● IRON PIN FOUND
- CP ● CALCULATED POINT
- CM CONCRETE MONUMENT
- ℄ CENTER LINE
- PROPERTY LINE
- R/W RIGHT-OF-WAY
- EXIST. EXCLUSIVE EASEMENT
- NEW EXCLUSIVE EASEMENT
- TEMPORARY CONST. EASEMENT

CITY OF COLUMBIA, S.C. — SUSTITIA VIRTUTUM REGINA

SOUTH CAROLINA CERTIFICATE OF AUTHORIZATION — URS CORPORATION No. C00934

OWNER ADDRESS:
ROBERT C. AND JENNIFER C. RHODES
4632 LELIA'S CT.
COLUMBIA, SC 29206

PREPARED BY:
URS
101 Research Drive
Columbia, South Carolina 29203
Telephone (803) 254-4400 : Fax (803) 771-6676
www.URSCorp.com

EASEMENT EXHIBIT PREPARED FOR
CITY OF COLUMBIA

PROJECT: IMPROVEMENTS TO SANITARY SEWER SYSTEM FOR CITY OF COLUMBIA, S.C.
LAKE KATHERINE SEWER LINE CAPACITY ENHANCEMENT

SCALE: 1"=40'	DATE: 11/28/2018	DRAWN BY: WHJ
CITY PROJECT NO.: SS7261		SHEET NO.20A OF 48
URS JOB No. 46423350	CF 250-378	37,265-A10

N:\PROJECTS\46423350\DRAWINGS\ASSIGNED\46423350-EE-20A_PARCEL-17.DWG 2/18/2019 8:38:58 AM

Last revised: 11/12/2019
19003440

RESOLUTION NO.: R-2019-098

Authorizing Condemnation for Easement Acquisition for Harlem Heights Storm Drainage Improvements; CIP Project #SD8386; Richland County TMS#14203-14-41, n/f Thomas S. Odom; 1700 Broadland Avenue; Richland County TMS#I1714-01-68, n/f Frank C. Graham and Gloria L. Graham; 1700 Carousel Circle; and Richland County TMS#14203-14-38, n/f Catherine Nesbitt n/k/a Catherine Nesbitt Douglas; 1712 Broadland Avenue; CF#250-254

WHEREAS, the City's Department of Engineering has identified this capital improvements project as part of the storm water system improvements in Harlem Heights to eliminate flooding in the community and to provide adequate water runoff to meet customer demands; and,

WHEREAS, City of Columbia's staff has made numerous attempts to negotiate for acquisition of the easements for this project, but have been unable to come to a negotiated resolution; NOW, THEREFORE,

BE IT RESOLVED by the Mayor and City Council this ___ day of _____, 2019, that it has been determined that for the public purpose of constructing the storm drainage project and for the benefit of upgrading the storm water system, it is necessary to acquire easements on portions of the properties described below and shown on Exhibit "A" attached hereto and incorporated herein by reference. Based upon an appraisal, it has been determined that the total just compensation is One Hundred and No/100 ($100.00) Dollars for each easement. The City Attorney is authorized to offer that amount to the Landowners in exchange for granting the referenced easements, if the Landowner does not accept within ten (10) days of the offer, the City Attorney is authorized to commence an action for acquisition of the easements by eminent domain.

Owners:	TMS# & Location:	Easement Description:	Appraised Value:
Thomas S. Odom	1700 Broadland Avenue Columbia, SC 29203	Permanent, Exclusive Easement Ten (10) Feet in Width (0.014 Acre) Easement 20 of 31 - Exhibit "A"	$100.00
Frank C. Graham & Gloria L. Graham	1700 Carousel Circle Columbia, SC 29203	Permanent, Exclusive Easement Variable Feet in Width (10.31' to 11.46') Easement 4 of 31 - Exhibit "A"	$100.00
Catherine Nesbitt n/k/a Catherine Nesbitt Douglas Note: One owner signed easement.	1712 Broadland Avenue Columbia, SC 29203	Temporary Construction Easement Ten (10) Feet in Width Easement 23 of 31 -Exhibit "A"	$100.00

Requested by:

Assistant City Manager Shealy

_____
Mayor

Approved by:

_____
City Manager

Approved as to form:

_____
Senior Assistant City Attorney

ATTEST:

_____
City Clerk

Introduced:
Final Reading:

EXHIBIT "A"

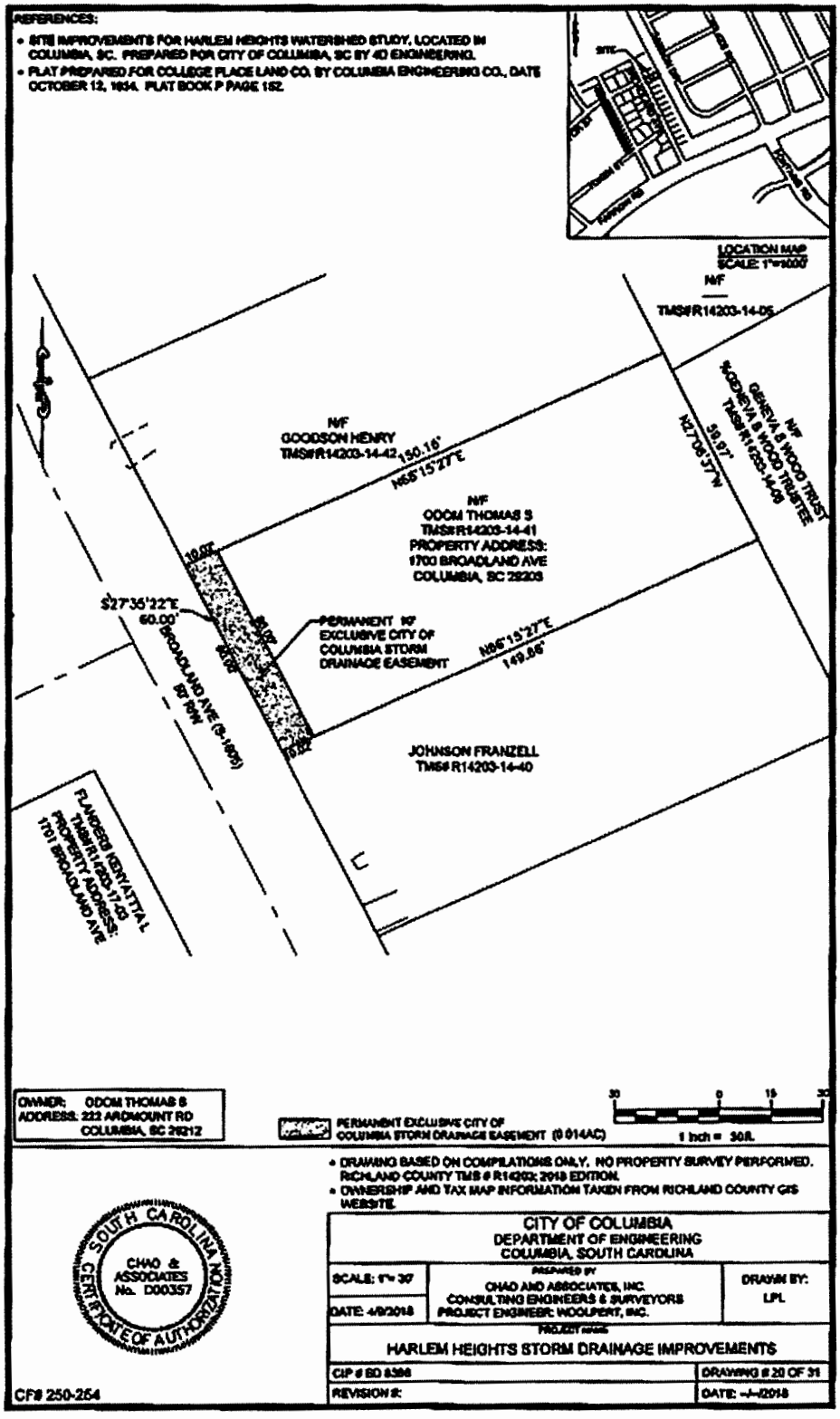

Last revised: 10/24/2019
19003417

EXHIBIT "A"

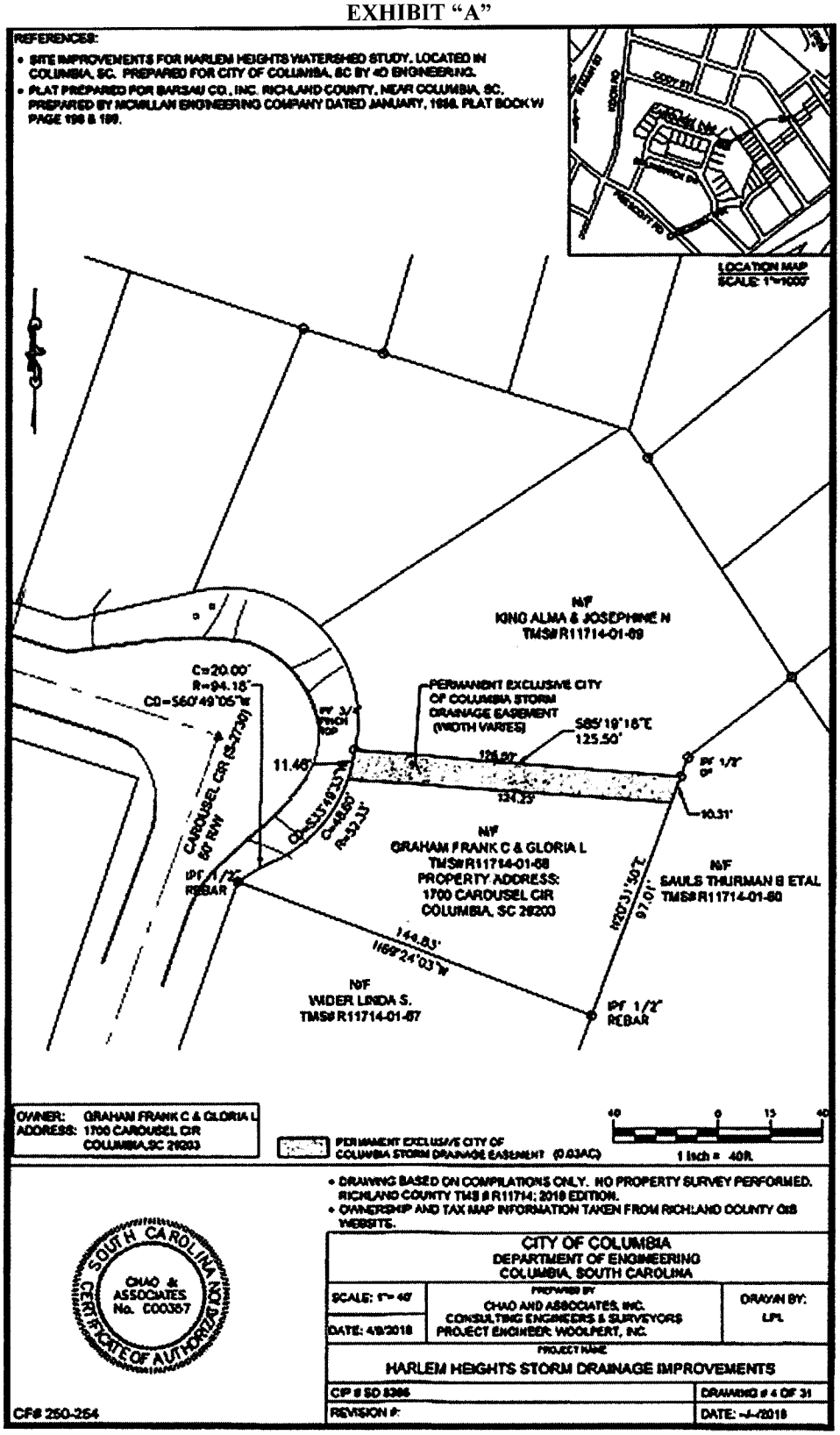

Last revised: 10/24/2019
19003417

EXHIBIT "A"

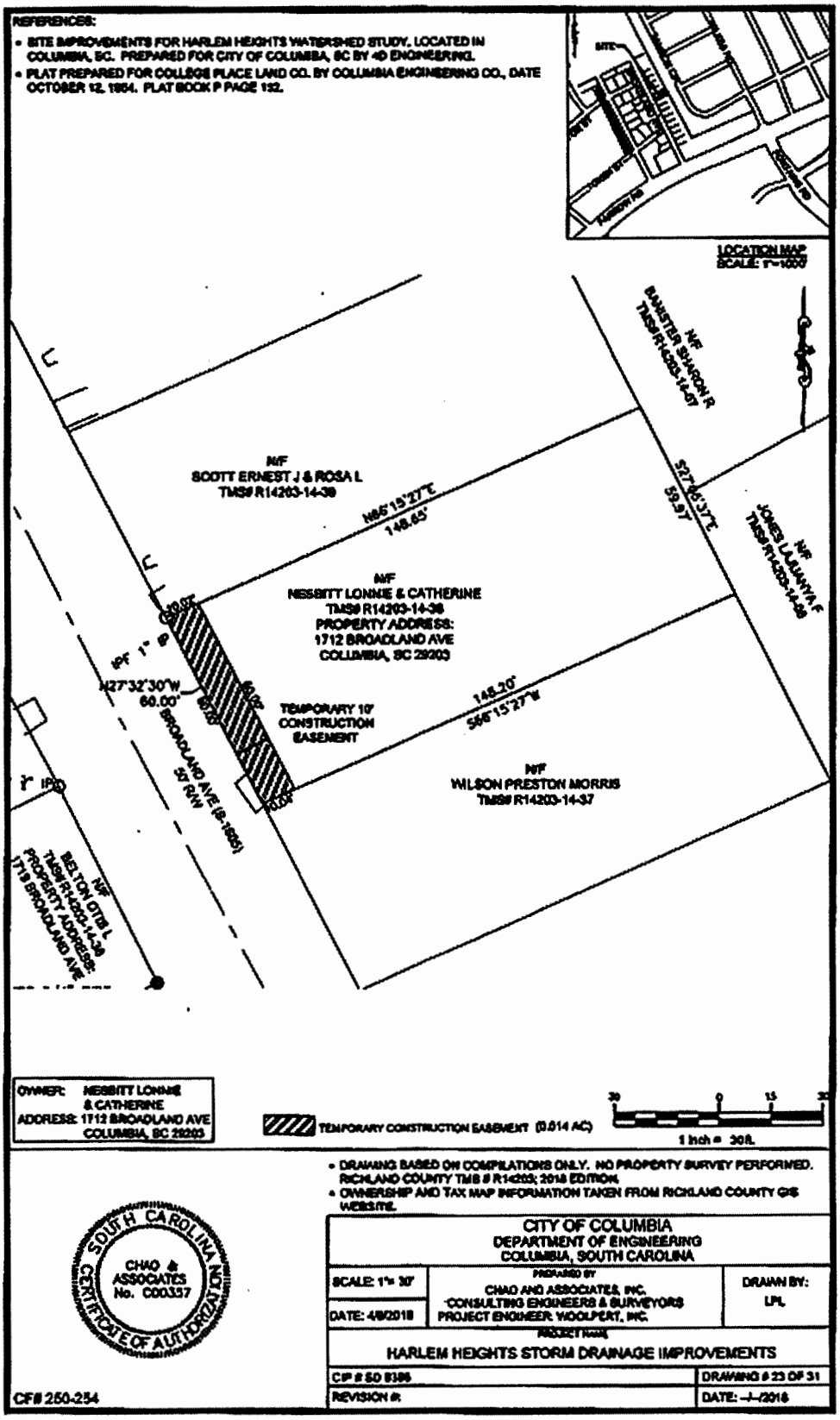

Last revised: 10/24/2019
19003417

RESOLUTION NO.: R-2019-099

Authorizing the City Manager to execute a Right of Entry Agreement between the City of Columbia and The River Alliance for access during surveying and design of Phase II of the Saluda Riverwalk

BE IT RESOLVED by the Mayor and City Council this ___ day of _____, 2019, that the City Manager is authorized to execute the attached Right of Entry Agreement, or on a form to be approved by the City Attorney, between the City of Columbia and The River Alliance for access during surveying and design of Phase II of the Saluda Riverwalk.

Requested by:

Assistant City Manager Gentry

Approved by:

_____
City Manager

_____
Mayor

Approved as to form:

_____
Deputy City Attorney

ATTEST:

_____
City Clerk

Introduced:
Final Reading:

LEGAL DEPARTMENT DRAFT

Last revised: 11/12/2019
19003491

STATE OF SOUTH CAROLINA)
)
COUNTY OF RICHLAND)

RIGHT OF ENTRY AGREEMENT

THIS RIGHT OF ENTRY AGREEMENT (the "Agreement") is made by and between the City of Columbia ("Grantor") and The River Alliance ("Grantee").

WITNESSETH:

WHEREAS, Grantor hereby grants to Grantee its successors or assigns, a Right of Entry as further described herein, together with the right of ingress and egress at all times necessary for the duration of the design, engineering and permitting necessary for construction of Phase II of the Saluda Riverwalk, a component of the Three Rivers Greenway.

This access includes the property, which Grantor owns, situate, lying and being referred to as TMS R09003-02-01 and TMS R07314-02-05 on the Broad River in Columbia, South Carolina. This is in accordance with the illustration attached as Exhibit "A", which will become a part of the City of Columbia's Three Rivers Greenway and complete the Saluda Riverwalk project.

Grantee and its engineers and consultants will enter the property to accomplish the design, engineering and permitting necessary to construct Phase II of the Saluda Riverwalk. This will include but not be limited to: topographical survey; wetland delineation; identification of protected species; permits for wetland or stream impacts; state navigable waterway permit; letter of map revision or conditional letter of map revision; archeological report; and design drawing.

This access will continue in effect for up to twenty-four (24) months from the date of approval.

TO HAVE AND TO HOLD the aforesaid rights to Grantee, its successors and assigns, as aforesaid.

IN WITNESS WHEREOF, the parties have hereunto have executed this Right of Entry Agreement effective as of the day and year of the last signature hereinbelow.

WITNESSES:

_____

_____

City of Columbia

_____
By: Teresa B. Wilson
Its: City Manager
Date: _____

The River Alliance

_____

_____

_____
By: Michael T. Dawson
Its: Chief Executive Officer
Date: _____

APPROVED AS TO FORM

Legal Department City of Columbia, SC

Exhibit A: Phase II - Saluda Riverwalk

LEGAL DEPARTMENT DRAFT

RESOLUTION NO.: R-2019-102

Authorizing the City Manager to execute a Sublease Agreement with Celia Saxon Shopping Center, LLC for the lease of Suite 110 and Suite 112 2012 Harden Street for the Employee Health Center

BE IT RESOLVED by the Mayor and City Council this ___ day of _____, 2019, that the City Manager is authorized to execute the attached Sublease Agreement for the Employee Health Center, or in a form to be approved by the City Attorney, between the City of Columbia and Celia Saxon Shopping Center, LLC for lease of Suite 110 and Suite 112 2012 Harden Street Celia Saxon Shopping Center for the terms and conditions therein contained.

(*Funding code: 6048920)*

Requested by:

City Manager

_____
Mayor

Approved by:

_____
City Manager

Approved as to form:

_____
Deputy City Attorney

ATTEST:

_____
City Clerk

Introduced:
Final Reading:

Last revised: 11/12/2019
19003587

STATE OF SOUTH CAROLINA)
)
COUNTY OF RICHLAND)

SUBLEASE AGREEMENT
(Resolution R-2019-102)

THIS SUBLEASE AGREEMENT is made by and between Celia Saxon Shopping Center LLC, a South Carolina Corporation, (hereinafter, "Landlord"), and The City of Columbia, South Carolina, (hereinafter, "Tenant").

W I T N E S S E T H :

WHEREAS, the above-stated parties desire to enter into an agreement whereby Tenant shall rent from Landlord certain premises set forth below; and,

WHEREAS, the Parties desire to set forth their rights and remedies regarding the demised property; and,

NOW, THEREFORE, for and in consideration of Tenant's payments of rent and the mutual covenants and promises contained herein, the Parties hereby agree as follows:

ARTICLE 1. SUBLEASED PREMISES

1.1 Subleased Premises. Subject to all the terms and conditions of this SubLease, Landlord has demised and Subleased, and hereby confirms such demise and Sublease to Tenant, and Tenant has hired and Subleased, and hereby confirms such hire and Sublease from Landlord, the land not less than 3297 square feet in the Subleased Premises being shown and outlined on the site plan attached hereto as Exhibit "A". The Subleased Premises is situated within the Celia Saxon Shopping Center, constructed by Landlord as herein provided, at the northeastern corner of the intersection of Harden Street with Walker Solomon Way in Columbia, South Carolina. The term Shopping Center as used herein shall mean and refer to the land Subleased by Landlord from the Authority, together with the buildings and other structures from time to time thereon. For the purpose of this document, the Subleased Premises shall extend to the exterior faces of all walls or to the building line where there is no wall, or to the center line of those walls separating the Subleased Premises from other leased premises in the Shopping Center, together with the appurtenances specifically granted in this SubLease, but reserving and accepting to Landlord the use of the exterior walls and the roof and the right to install, maintain, use, repair and replace pipes, ducts, conduits and wires leading through the Subleased Premises in locations which will not materially interfere with Tenant's use thereof and serving other parts of the Shopping Center. Tenant's address in the Shopping Center is 2012 Harden Street, Suite 110 and 112 Columbia, S.C. 29204. Tenant recognizes and agrees that, the "Common Area" (or "Common Areas") is the part of the Shopping Center, not occupied by buildings and made available for the non-exclusive use of all tenants, and their customers, employees and invitees, including among other facilities, parking area, sidewalks, landscaping, curbs, loading areas, private streets and alleys, lighting facilities, hallways, malls, restrooms, roofs, exterior wall surfaces and other areas and improvements provided by Landlord for the common use of all tenants, all of which shall be subject to Landlord's management and control. Tenant's use of the Common Area, shall be in harmony hereof, and Tenant's right to the Common Area shall be non-exclusive and reasonable and reasonably restricted and limited by Landlord, as solely determined by Landlord, and Tenant shall make no extraordinary use of the Common Area, nor utilize advertising, without the advance written approval of the Landlord (for the purposes of this provision, "Tenant" means, Tenant's concessionaires, officers, employees, agents, customers and invitees).

1.2 Permitted Encumbrances. Ad Valorem taxes for 2012 and subsequent years are permitted encumbrances; provided, however, the rent for the year in which the SubLease begins shall be prorated based upon the period of occupancy of the Tenant for that year;

ARTICLE 2. TERM

2.1 Term. Commencing on the "Commencement Date" as July 1, 2019, hereinafter defined and ending one (1) year thereafter, except that in the event the Commencement Date is a day other than the first day of a calendar month, said term shall extend for said number of years in addition to the remainder of the calendar month following the Commencement Date (the "Initial Term"). Tenant has the option to renew this SubLease for an additional term of one (1) year ("First Renewal Term") under the same terms and conditions as exist at the end of the initial Term except that the Basic Rent (as defined hereafter) shall increase by an additional ten (10%) percent for the duration of the First Renewal Term. To exercise its renewal option, Tenant shall deliver in writing to Landlord a notice of such election no later than ninety (90) days prior to the termination of the initial Term to exercise the First Renewal Term. Access prior to the Commencement of the Term, shall be arranged by consultation with Landlord. Each party shall have the right to terminate this Agreement, with or without cause, by providing ninety (90) days written notice.

2.2 Security Deposit. Prior to or contemporaneous with the Commencement Date, Tenant shall deposit with the Landlord the amount of Five Thousand and No/100 ($5,000.00) Dollars ("Security Deposit"). Tenant agrees that the Security Deposit may be deposited into an operating account of Landlord and utilized by Landlord for the operation of the Premises. The Security Deposit is to be refunded to Tenant upon vacating the Premises at the expiration of the SubLease, or any renewal hereof, if the Tenant is not then in default and the premises are returned to the Landlord are in, "broom clean" condition, with no waste committed In no event, may the Security Deposit be deemed by, or utilized by, Tenant to be available to offset Rent or Additional Rent, or any monies due to Landlord under this SubLease

2.3 Delivery of Premises. On or before the Commencement Date, Landlord shall have completed the following at its sole cost and expense:

a. Provide Tenant with an HVAC inspection letter from a licensed and bonded contractor attesting that the HVAC system currently in use at the Premises is in proper working condition; and,
b. Prepared the Premises then delivered the Premises to Tenant in broom-clean condition.

2.4 Holding Over. At any expiration or cancellation of this SubLease, should Tenant hold over for any reason, it is hereby agreed that, in the absence of a written agreement to the contrary, such tenancy shall be from month to month only on the same terms hereof, with the rent escalation set forth herein.

2.5 Return of Premises. Tenant shall, on the last day of the term, or upon sooner termination of the Term, or Renewal Term hereof, peaceably and quietly surrender the Premises to Landlord in as good condition and repair as at the Commencement Date, and shall also surrender any new buildings, structures, replacements or additions, or improvements constructed, erected, added, or placed thereon, with normal wear and tear excepted.

ARTICLE 3. RENT

3.1 Basic Rent/Common Area Costs. During the One Year Term, the Fixed Rent shall be based on a fee of approximately $12.50 per square foot of leased space in the Shopping Center or $3,424.00 per month or $41,088 per year. At the end of the Term, the parties will negotiate the Fixed Rent for any additional Extension Term at least 180 days, but no more than 270 days prior to the expiration of the Initial Term. For any Renewal Term, the Rental payments due to the Landlord shall escalate by ten percent (10%), consistent with provision 2.1 herein. The Fixed Rent for a Fractional Month (if any) shall be apportioned on a per diem basis, calculated on the basis of a thirty (30)-day month, and shall be payable upon the commencement of the Lease Term. Common Area Costs- In addition to the monthly Fixed Rent, there will be an additional cost of approximately $3.74 per square foot of the leased space for the Cost of the Common Area Maintenance, otherwise specified herein, Tenant shall pay to Landlord a contribution towards "common area maintenance" such sum payable in equal monthly installments in advance on the first day of each month during the Lease Term. Tenant's Pro Rata Share shall be based upon the reasonably estimated annual cost of operation and maintenance of the Common Area. This cost for the above mentioned Subleased space is approximately $3.74 per square foot x 3297 square feet, or $12,324.00 per year or $1,027 per month for the duration of the SubLease.

3.2 Additional Rent. In addition to the Basic Rent provided for above, Tenant shall pay to Landlord as additional rent ("Additional Rent") all amounts as set forth throughout this SubLease. A default in payment of Additional Rent by Tenant shall give Landlord the right to exercise the same remedies as for a default in the payment of Basic Rent.

3.3 Payment of Rent. All Basic and Additional Rent is due and payable in advance on the tenth (10th) day of each calendar month (or, as to invoiced Additional Rent, within ten (10) days after receipt of written demand) and is to be paid to Landlord. In the event that any installment of Basic Rent, Additional Rent, or other sums payable hereunder by Tenant to Landlord are not paid on the due date, Tenant shall pay, in addition to such unpaid installment, a late payment penalty of Fifty ($50.00) Dollars for each day said rent is in arrears beginning on the first (1st) day after said rent is due, or the highest interest rate permitted by law in the event the Fifty ($50.00) Dollar late payment penalty is deemed invalid by a Court of competent jurisdiction.

3.4 Net SubLease. The Basic Rent provided for herein shall be in addition to and over and above all other charges, expenses, costs, impositions, utilities, insurance, and other payments whatsoever to be made by Tenant under this SubLease as more fully described herein.

ARTICLE 4. USE AND OPERATION

4.1 Permitted Uses. During the Term of this SubLease, the Premises may only be used for, lawful purposes, which for this SubLease is said to be, a Medical and Wellness Center to be operated by an independent contractor engaged by the City of Columbia to provide medical, pharmaceutical and wellness services to current City employees, City retirees and dependents, (hereinafter, "Medical and Wellness Center").

4.2 Prohibited Uses. Tenant shall not use, occupy, suffer, or permit the Premises or any part thereof to be used in any manner which would in any way: **(a)** violate any statute, ordinance, law, or regulation affecting the Premises, **(b)** make void, voidable, or unobtainable any insurance coverage required by this SubLease to be maintained by Tenant, **(c)** constitute a public or private nuisance, or **(d)** cause Tenant to default in any of its other obligations under this SubLease.

4.3 Leaving Premises Unoccupied. Tenant shall have the right, at any time, to leave the Premises unoccupied; provided that during any such period that the Premises is unoccupied, Tenant shall still be responsible for the Premises and all contents thereof, and Tenant shall not during any such period be released from its obligations under this SubLease, both financial and custodial. The Landlord acknowledges that the City is self-insured, which consists solely of the protection and rights provided to City under the South Carolina Tort Claims Act. The currently effective limitations on liability under said Act are set forth in Section 15-78-120 of the Code of Laws of South Carolina 1976, as amended.

4.4 Compliance with Laws, Ordinances and Regulations. The use of the Premises will be a permitted use under all applicable statutes, codes, rules, regulations, and ordinances. Landlord represents and warrants to Tenant that the Premises shall at all times comply with all applicable laws governing its use and occupancy. Landlord shall at Landlord's sole expense, promptly comply with and carry out all orders, requirements, or conditions now or hereafter imposed upon Landlord or Tenant by the ordinances, laws, and/or regulations of any Governmental authorities, as may apply to the Premises. If during the term of this SubLease the application of any statute, code, or ordinance of any government authority, agency, official, or officer applicable to the Premises makes it impossible or not economical for Tenant to operate in the Premises, then Tenant, at its option, may terminate this SubLease, whereupon the Basic Rent and Additional Rent and all other charges payable hereunder by Tenant shall be apportioned as of such date of termination, and all monies owed to Landlord are immediately due and payable.

ARTICLE 5. ASSIGNMENT AND SUBLETTING

5.1 Assignment and Subletting. Provided Tenant is not in default hereunder, Tenant may seek a written approval from the Landlord to assign this SubLease and/or make subleases of all or any portion of the Premises. Any permitted assignee/subtenant may use the Premises for any lawful purpose permitted by

this SubLease. Landlord may assign this SubLease and all rights hereunder provided Tenant's use and enjoyment of the Premises during the term of this SubLease is not disturbed.

ARTICLE 6. STRUCTURAL ALTERATIONS AND REPAIRS

6.1 Structural and Non-Structural Alterations. Tenant may make reasonable structural and reasonable non-structural alterations, installations, substitutions, decorations, and improvements ("Tenant Improvements") in and to the Premises as Tenant may reasonably desire to adapt the Premises to Tenant's business purposes. Each such Tenant Improvement shall be completed in accordance with all applicable codes, rules, and regulations. Tenant shall not exercise the right and privilege granted by this Article in such manner as to damage permanently the structural qualities of the building. Tenant may make such additions, improvements, or alterations to the Premises at its sole cost and expense. Tenant shall not permit mechanics liens to become attached or remain on the Subleased premises, and Tenant is solely responsible for the same.

6.2 Fixtures and Personal Property. Landlord agrees that all trade fixtures, partitions, shelves, signs, machinery, equipment, furniture, or other personal property of whatever kind or nature kept or installed at the Premises by Tenant shall not become the property of Landlord or a part of the realty no matter how affixed to the Premises and may be removed by Tenant at any time and from time to time during the Term and any renewal thereof, only if any such removal causes no damage to the Premises. At the expiration or sooner termination of this SubLease, or any renewal thereof, Tenant shall remove any and all trade fixtures, partitions, shelves, signs, machinery, equipment, furniture, or other personal property of whatever kind or nature, and repair all damage done to the Premises by such removal; natural wear and tear, damage by storm, fire, flood, lightning, or other natural casualty excepted.

6.3 Landlord's Obligation for Maintenance. During the full term of this SubLease and any renewal thereof, the Landlord shall reasonably maintain the roof, exterior walls, foundations, underground utilities leading to the Premises, and other structural portions of the Premises at Landlord's expense. So long as Tenant maintains an annual service maintenance agreement on the HVAC system, Landlord shall be responsible for any and all costs of repair, maintenance, installation, and replacement of the HVAC system greater than One Thousand, Five Hundred and No/100 ($1,500.00) Dollars incurred per calendar year. For avoidance of doubt, all repairs, replacements, and renewals shall be equal in quality and class to the original work.

ARTICLE 7. ENVIRONMENTAL MATTERS

7.1 Releases. Tenant represents and warrants to Landlord that during the term of this SubLease no hazardous waste (as that term is defined in state or federal law) or substance which is harmful to the environment will be generated, treated, stored, processed, or disposed on the Premises, except in full compliance with all local, state, federal laws, ordinances, and regulations. Landlord represents, as of the Commencement Date, to the best of its knowledge **(a)** none of the buildings or other structures on the Premises contain asbestos nor have asbestos-containing materials and **(b)** that no hazardous waste, materials or substances, as defined by applicable federal, state or local law have been heretofore disposed of on the Premises and that no other environmental hazards exist on the Premises.

ARTICLE 8. INSURANCE

8.1 Insurance by Tenant. The Landlord acknowledges that the City is self-insured, which consists solely of the protection and rights provided to City under the South Carolina Tort Claims Act. The currently effective limitations on liability under said Act are set forth in Section 15-78-120 of the Code of Laws of South Carolina 1976, as amended.

ARTICLE 9. TAXES AND ASSESSMENTS

9.1 Escrows for Taxes. Tenant agrees to remit to Landlord, concurrent with the payment of Basic Rent, an amount equal to 1/12 of the amount required to pay the current year's Ad Valorem taxes Ad Valorem taxes and/or special assessments and cost of maintaining the common area of the Shopping Center are equal to Tenant's pro rata share, which shall be computed upon the ratio of the square feet of the Leased

Premises to the total leaseable square footage of the Shopping Center, not to include the common area. The Parties agree to reconcile the amounts paid into escrow by Tenant with the actual tax bill at the end of each tax year. All such payments for taxes shall be remitted timely to the governmental entity by Landlord as Landlord shall be solely responsible for any fine, penalty, interest, cost, or imposition arising from a late payment or imposed by operation of law. Within ten (10) business days of Tenant's request, Landlord shall furnish to Tenant receipts for the payment of all taxes and assessments, or other evidence satisfactory to Tenant that such payments have been made by Landlord.

9.2 Tenant May Perform Landlord's Obligations. If Landlord shall, after ten (10) days of receiving notice of the overdue obligation, **(a)** fail to pay any tax or assessment; **(b)** fail to provide proof of payment as hereinabove required; or **(c)** fail to deliver any certificate as provided above; Tenant shall have the right, but shall not be obligated, to pay the Ad Valorem tax and/or assessment and all amounts so paid including, but not limited to, costs, penalties, and interest, shall be repaid to Tenant by Landlord immediately or Tenant may deduct such amounts from Basic and Additional Rent due to Landlord.

ARTICLE 10. UTILITIES AND MAINTENANCE CONTRACTS

10.1 Tenant to Pay. Tenant is responsible for the maintenance and replacement of locks and Tenant is responsible for the maintenance and replacement for all electric light bulbs, tubes and fixtures within or on the Subleased premises, and Tenant shall promptly pay, or cause to be paid, all proper charges for gas, electricity, cable or satellite heat, water, sewerage or plumbing costs, including the freezing thereof, and power for telephone, protective, and other communication services, removal of garbage and waste, (Tenant shall not permit or allow garbage or trash to accumulate on the Subleased premises), and for all other public or private utility services, which shall be used, rendered, or supplied on or in connection with the Premises, or any part thereof, at any time during the term of this SubLease.

ARTICLE 11. ACCESS TO PREMISES

11.1 Access. Subject to applicable Government security regulations, Tenant shall permit inspections of the Premises by Landlord, its agents or representatives, and by or on behalf of prospective purchasers or mortgagees of the Premises at reasonable times and for reasonable periods after reasonable notice to Tenant at any time during the term of this SubLease and shall permit Landlord access to make such repairs required hereunder by Landlord or repairs that Tenant shall fail to make. During the sixty (60) day period immediately preceding the expiration of the Initial Term or any renewal term, Tenant shall permit inspection of the Premises at reasonable times and for reasonable periods by or on behalf of prospective tenants. If at any time an entry shall be deemed necessary in the sole discretion of Landlord for the protection of the Premises, Landlord or Landlord's agents or representatives may enter the Premises for any such purpose. The provisions of this Article are not intended to create or increase, and are not to be construed as creating or increasing, any obligations of Landlord under this SubLease.

ARTICLE 12. DEFAULT AND REMEDIES

12.1 Events of Default by Tenant. The occurrence of any of the following events during the Term or any extension of this SubLease shall constitute a default hereunder and shall entitle Landlord to exercise all remedies available at law or equity including those hereinafter set forth:

a. Failure of Tenant to make payment of any installment of the Basic Rent expressly reserved hereunder or any part of same within fifteen (15) days after receiving written notice that the same is overdue; or

b. Failure of Tenant to make payment of any item of Additional Rent or any other charge required to be paid by Tenant hereunder or any part of same within fifteen (15) days after receiving written notice that the same is overdue; or

c. Failure of Tenant to fulfill any of the covenants of this SubLease and to cure said default within thirty (30) days after written notice to Tenant to cure.

d. After an Event of Default by Tenant, Landlord has the express right to remove and store any property, personal or otherwise then on the Subleased premises, with the Tenant being solely responsible for all costs of removal and storage of all items, and Tenant being solely responsible for all claimed loss, damage or costs to any items removed from the Subleased premises.

12.2 Events of Default by Landlord. The occurrence of any of the following events during the Term or any extension of this SubLease shall constitute a default hereunder and shall entitle Tenant to exercise all remedies available at law or equity including those hereinafter set forth:

a. Failure by Landlord to observe or perform any covenant, agreement, condition or provision required of Landlord pursuant to the terms and provisions of the SubLease which materially affects the use or habitability of the Premises and if such failure shall continue for thirty (30) days after receipt of written Notice from Tenant to Landlord specifying such failure; provided, however, if such default is of a nature that it can be cured and if Landlord in good faith commences to cure such default within such ten (10) day cure period, but due to the nature of such default it could not be cured within such cure period after due diligence, no default by Landlord shall be deemed to have occurred at the end of the cure period if Landlord is then diligently pursuing such cure to completion, and completes such cure as promptly as reasonably possible under all the circumstances; or

b. Filing by Landlord or a filing against Landlord with regard to a petition or case under any section or chapter of the United States Bankruptcy Code, as amended, or under any similar law or statute of the United States or any state and such petition or case is not discharged within sixty (60) days.

12.3 Remedies of Landlord. In the event of default by Tenant, Landlord shall have all remedies available at law or equity including the following remedies; provided, however, Landlord's option to terminate this SubLease can only arise after Tenant's failure to cure such default following thirty (30) days written notice from Landlord of such default:

a. In the event of a default described in subsections (a), (b), and (c) of Article 12.1 above, Landlord, at its option, may terminate this SubLease and, upon such termination, Tenant shall quit and surrender the Premises to Landlord, but Tenant shall remain liable as hereinafter provided.

b. Upon the termination of this SubLease by reason of default by Tenant by summary proceedings or under any provision of law now, or at any time hereafter, in force by reason of, or based upon, or arising out of a default under, or breach of, this SubLease by Tenant, or upon Landlord's recovering possession of the Premises in the manner or in any of the circumstances hereinbefore mentioned or in any other manner or circumstances whatsoever, whether with or without legal proceedings, by reason of default under, or breach of, this SubLease by Tenant, Landlord shall use reasonable diligence to relet the Premises or such part or parts thereof as may be practicable for the account of Tenant or otherwise, and receive and collect the rents. Landlord shall apply the rent first to the payment of such reasonable expenses as Landlord may have incurred in recovering possession of the Premises (including legal expenses and attorney's fees) and in putting the Premises into good order or condition or preparing or altering the same for re-rental; second, to all other expenses, commissions, and charges paid, assumed, or incurred by Landlord in or about reletting the Premises; and third, to the fulfillment of the covenants of Tenant hereunder. Any such reletting herein provided for may be for the remainder of the term of this SubLease as originally granted, or for a longer or shorter period.

c. In any such case, and whether or not the Premises or any part thereof is relet, Tenant shall pay to Landlord the Basic Rent and all other Additional Rent and other charges required to be paid by Tenant up to the time of such termination of this SubLease or of such recovery of possession of the Premises by Landlord, as the case may be. Thereafter, Tenant agrees to pay the equivalent of the amount of all the Basic Rent reserved herein and all Additional Rent and other charges required to be paid by Tenant, less the net proceeds of reletting available for application to Tenant's obligations, if any, and the Basic and Additional Rent shall be due and payable by Tenant to Landlord on the several rent days specified above, e.g., upon each of such rent days Tenant shall pay to Landlord the amount of the deficiency then existing.

12.4 Remedies of Tenant. In the event Landlord fails to repair any damage or perform any other action or obligation for which Landlord is responsible under this SubLease and fails to cure such default after fifteen (15) days of receiving notice of such failure and Tenant's intention to perform the same, Tenant

shall have the right to perform such obligation and to receive reimbursement from Landlord of the reasonable costs associated therewith or deduct such reasonable costs from the amount of rent due. The rights described in this Article shall be deemed Tenant's "Self-Help Rights" and "Set-Off Rights". Notwithstanding any provision in this SubLease to the contrary, Tenant shall have all remedies available at law or equity in the event of default by Landlord of its obligations under this SubLease, provided, however, Tenant's option to terminate this SubLease can occur after Landlord fails to cure such default following thirty (30) days written notice from Tenant of such default.

12.5 All Defaults Deemed Material. All events of default contained herein, shall be deemed material in any type of termination proceeding in any Court of competent jurisdiction.

ARTICLE 13. NOTICES

13.1 Notices. All notices, requests, approvals, consents, demands, or other communications shall be effective upon the first to occur of the following: **(i)** upon receipt by the Party to whom such notice, request, approval, consent, demand, or other communication is given; or **(ii)** three (3) business days after being duly deposited in the United States mail, certified or registered, return receipt requested, and addressed as follows:

If to Landlord:
Celia Saxon Shopping Center
1917 Harden Street
Columbia, SC 29204
Attention: Accounting Department

If to Tenant:
City of Columbia
P.O. Box 147
Columbia, SC 29217
Attention: City Manager

With a copy to:
City of Columbia
P.O. Box 667
Columbia, SC 29202
Attention: City Attorney

The Parties hereto may change their respective addresses by notice in writing given to the other party to this SubLease.

ARTICLE 14. NON-DISTURBANCE, ATTORNMENT, AND QUIET ENJOYMENT

14.1 Non-Disturbance, Subordination, and Attornment. This SubLease and all rights of Tenant hereunder are and shall be subject in all respects to all mortgages of Landlord which may now or hereafter affect the Premises. Landlord under any such lease or the holder of any such mortgage shall, upon request, furnish to Tenant a Non-Disturbance Agreement in the form and substance reasonably satisfactory to Tenant.

14.2 Quiet Enjoyment. If and so long as Tenant shall pay the Basic Rent and Additional Rent provided for in this SubLease and shall perform and observe all the covenants and conditions contained herein on the part of Tenant to be performed and observed, Tenant shall quietly enjoy the Premises without any manner of hindrance, interruption, or molestation from Landlord or anyone claiming under Landlord, subject, however, to the terms of this SubLease and to the Permitted Encumbrances set forth in Section 1.2.

14.3 Estoppel Certificates. Tenant agrees that, at any time and from time to time upon not less than fifteen (15) days prior notice from Landlord, it shall execute, acknowledge, and deliver to Landlord a reasonable Estoppel Certificate certifying **(i)** that this SubLease is in full force and effect and unmodified, or if there have been modifications, stating such modifications; **(ii)** the dates to which Basic Rent has been paid and the then current amount of Basic Rent; **(iii)** that to the best knowledge of Tenant, Tenant is not then in default under this SubLease or stating such defaults as may then exist; and **(iv)** such other information as Landlord may reasonably request.

ARTICLE 15. CASUALTY AND CONDEMNATION

15.1 Damage or Destruction. If the Premises are damaged by storm, fire, lightening, earthquake, other element, or any other casualty not due to Tenant's gross negligence, Landlord shall use the insurance proceeds to repair the damage in a reasonable time (but not to exceed sixty (60) days of the casualty), but the rent shall not be abated unless the Premises are thereby rendered uninhabitable in whole or in part. If the Premises are thereby rendered uninhabitable only in part as determined by Tenant, the rent shall be abated in proportion to the part rendered uninhabitable. If the Premises are thereby rendered wholly uninhabitable as determined by Tenant, the rent shall be entirely abated during the period of repair. If the Premises cannot be restored to its prior condition within sixty (60) days of the casualty, Tenant may terminate this SubLease by giving notice to Landlord in writing; provided however, if the damage is due to the gross negligence of Tenant, Tenant may not terminate the SubLease. In the event of such termination, the rent shall be apportioned to the termination date and the Parties need not repair or restore the Premises.

15.2 Eminent Domain. In case the whole of the Premises shall at any time during the said term be taken by any public authority for any public use, the entire damages which may be awarded for such taking shall be apportioned between Landlord and Tenant. In case only a part of the Premises shall be so taken for public use, the rights, duties, and obligations of Landlord and Tenant shall be determined by taking into consideration the quantity and value of the land taken, the extent of the injury thereby caused to the building, the costs of restoring the building, the value of the building if restored, the period of the unexpired term of this SubLease, and all the other materials facts and circumstances. Other factors to consider include: that the whole or any part of the damages awarded by the public authorities for such taking shall be applied to the restoration of the building which may be upon the Premises at the time of such taking; that such damages shall be apportioned between Landlord and Tenant to be paid to either one of them; that the whole or any part of the rent shall be abated from the time of the taking or for any less time; that the SubLease shall be otherwise modified; or that the SubLease shall terminate. Tenant shall have the option to terminate this SubLease if a condemnation or threat thereof, as defined above, results in a taking of all or a portion of the Subleased Premises and such taking precludes Tenant from conducting its normal business operations for a period of at least thirty (30) days.

ARTICLE 16. MISCELLANEOUS

16.1 Severability. Any provision of this SubLease which shall prove to be invalid, void, or illegal shall in no way affect, impair, or invalidate any other provision hereof, and the remaining provisions hereof shall nevertheless remain in full force and effect. If the intent of any Articles of this SubLease so indicate, the obligations of Landlord and Tenant pursuant to such Articles shall survive the termination of this SubLease.

16.2 Governing Law. This SubLease shall be governed by and construed in accordance with the laws of the State of South Carolina.

16.3 Entire Agreement. This SubLease contains the entire understanding between the Parties and supersedes any prior understanding or agreements between them respecting the subject matter. No representations, arrangements or understandings except those fully expressed herein, are or shall be binding upon the Parties. No changes, alterations, modifications, additions or qualifications to the terms of this SubLease shall be made or be binding unless made in writing in the form of an amendment to lease and signed by each of the Parties.

16.4 Benefit and Binding. This SubLease and the terms and conditions hereof shall inure to the benefit of, and be binding upon, the Parties, their successors, and permitted assigns.

16.5 Headings. The headings of Articles and Sections of this SubLease are not a part of this SubLease and are intended solely for ease of reference. Such headings shall have no effect upon the construction or interpretation of any part hereof.

16.6 No Waiver. No failure on the part of either Party to enforce any term, covenant, or condition contained herein, nor any waiver of any right hereunder by either Party, unless in writing, shall constitute

a waiver of such right or affect the right of such Party to enforce the same in the event of any subsequent breach or default unless the waiver shall be in writing signed by the Party waiving its right(s).

16.7 Rights Cumulative. The rights given to the Parties herein are in addition to any rights which may be given to Landlord and/or Tenant by any statute or otherwise.

16.8 No Merger. There shall be no merger of this SubLease or of the leasehold estate hereby created with the fee estate in the Premises by reason of the fact that the same person acquires or holds, directly or indirectly, this SubLease or the leasehold estate hereby created or any interest herein or in such leasehold estate as well as the fee estate in the Premises or any interest in such fee estate, unless the parties signify in a written instrument their intent that such estates shall be merged.

16.9 Force Majeure. In the event that Landlord or Tenant shall be delayed or hindered in or prevented from the performance of any act required hereunder by reason of strikes, lockouts, inability to procure labor or materials, failure of power, fire or casualty, acts of God, riots, insurrection, war, or other reason of like nature, then performance of such acts shall be excused for the period of delay and the period for the performance of any such act shall be extended for a period equal to the period of delay.

16.10 Modification. None of the terms, covenants, or agreements of this SubLease shall in any manner be altered, waived, or changed except in a written instrument signed by both Parties, with a formality hereof.

16.11 Bankruptcy. In the event Landlord is involved in any bankruptcy or insolvency proceedings and Landlord's or the Court's Trustee fails to perform or rejects any of the Landlord's obligations under this SubLease, Tenant shall have the option to terminate this SubLease.

16.12 Recording. The Parties agree that this SubLease shall not be recorded, but a Short Form SubLease or Memorandum of SubLease, complying in form with applicable state law, shall be executed setting forth the description of the Premises, the Term of this SubLease and other pertinent provisions.

16.13 Tenant's Right of First Refusal. Except with regard to a sale or transfer to an affiliate of Landlord, if Landlord receives a binding offer to purchase its interest in the Premises, Landlord shall notify Tenant in writing ("Landlord's Sale Notice") of the person/entity desiring to purchase Landlord's interest in the Premises and the purchase price for such sale. Such notice shall also include a copy of such offer. Tenant may, within thirty (30) days after receipt of the Landlord's Sale Notice, elect in writing to purchase Landlord's interest in the Premises at the price and on the terms stated in the Landlord's Sale Notice. If Tenant elects to purchase the Premises, Landlord and Tenant shall close the purchase of the Premises for cash or on the financing terms set forth in Landlord's Sale Notice within ninety (90) days after the date of Tenant's election. If within such 30-day period, Tenant does not elect in writing to so purchase the Premises, Landlord shall thereafter have the right to sell and convey its interest in the Premises to the person or entity at the price and on the terms stated in the Landlord's Sale Notice. If Landlord does not so sell and convey its interest in the Premises within six (6) months of Tenant's election not to purchase the Premises, any later proposed sale by the Landlord shall be deemed a new determination by Landlord to sell and convey its interest in the Premises and shall again be subject to the provisions of this Section. The rights of Tenant contained in this Section shall continue with respect to the Premises and shall be binding upon any new owner of the Premises after any sale of the Premises or any sale or transfer to an affiliate of Landlord.

16.14 Landlord Not A Partner. For avoidance of doubt, nothing herein contained shall be deemed or may be reasonably construed as creating the relationship of associate, principal and agent or of partnership or joint venture between the Parties hereto, and the Medical and Wellness Center is not and cannot be reasonably construed as an Instrumentality or *Alter-Ego* of the Landlord; it being understood and agreed that neither the method of computing rent nor any other provision contained herein, nor any acts of the Parties hereto, shall be deemed to create any relationship between the Parties other than that of Landlord and Tenant.

16.15 Construing of SubLease. This SubLease and any documents or instruments delivered pursuant hereto, shall be construed without regard to the identity of the Person who drafted the various provisions of the same. Each and every provision of this SubLease and such other documents and instruments shall be

construed as though the Parties participated equally in the drafting of the same. Consequently, the Parties acknowledge and agree that any rule of construction that a document is to be construed against the drafting Party shall not be applicable either to this SubLease or such other documents and instruments.

16.16 Replacement of Glass. At the commencement of the Lease Term all glass in the Leased Premises shall be in good condition and undamaged. Tenant shall thereafter, at its own expense, replace all broken or damaged glass in the Leased Premises.

16.17 Signs, Awnings and Canopies. Tenant may only install signage, awnings and canopies in strict compliance with applicable zoning Laws and regulations, and with advance written approval of the Landlord, which approval, shall not be unreasonably withheld, but which approval shall be in Landlord's sole discretion. Tenant will not place, nor suffer to be placed any signage or advertising, which is inconsistent with this provision.

IN WITNESS WHEREOF, the Parties hereto have duly executed this SubLease as of the day and year of the last signature here below.

This portion left blank

WITNESSES AS TO LANDLORD:

LANDLORD:

CELIA SAXTON SHOPPING CENTER LLC:

_____
Witness #1

BY: _____
ITS: _____

_____
Witness #2

STATE OF SOUTH CAROLINA)
)
COUNTY OF RICHLAND)

ACKNOWLEDGMENT

The foregoing Sublease Agreement was acknowledged before me this ___ day of _____, 2019 by _____, _____ of Celia Saxon Shopping Center, LLC on behalf of the within-named Landlord.

_____
Witness

Sworn to before me this ___ day of _____, 2019

_____
Notary Public for South Carolina
My Commission Expires: _____

WITNESSES AS TO TENANT:

TENANT:

CITY OF COLUMBIA:

_____
Witness #1

BY: _____
Teresa B. Wilson
ITS: City Manager

_____
Witness #2

STATE OF SOUTH CAROLINA)
)
COUNTY OF RICHLAND)

ACKNOWLEDGMENT

The foregoing Sublease Agreement was acknowledged before me this ___ day of _____, 2019 by Teresa B. Wilson, City Manager of the City of Columbia on behalf of the within-named Tenant.

_____
Witness

Sworn to before me this ___ day of _____, 2019

_____
Notary Public for South Carolina
My Commission Expires: _____

APPROVED AS TO FORM
Legal Department City of Columbia, SC

WITNESSES AS TO LANDLORD:

Witness #1

Witness #2

LANDLORD:

CELIA SAXON SHOPPING CENTER LLC:

BY:

ITS: Chief Executive Officer

STATE OF SOUTH CAROLINA)
)
COUNTY OF RICHLAND)

ACKNOWLEDGMENT

The foregoing Sublease Agreement was acknowledged before me this 19 day of September 2019 by Ivory Mathews, CEO of Celia Saxon Shopping Center, LLC on behalf of the within-named Landlord.

Witness

Sworn to before me this 19 day of September, 2019

Notary Public for South Carolina
My Commission Expires: 8-26-2029

WITNESSES AS TO TENANT:

Witness #1

Witness #2

TENANT:

CITY OF COLUMBIA:

BY:
Teresa B. Wilson
ITS: City Manager

STATE OF SOUTH CAROLINA)
)
COUNTY OF RICHLAND)

ACKNOWLEDGMENT

The foregoing Sublease Agreement was acknowledged before me this ___ day of _____, 2019 by Teresa B. Wilson, City Manager of the City of Columbia on behalf of the within-named Tenant.

Witness

Sworn to before me this ___ day of _____, 2019

Notary Public for South Carolina
My Commission Expires: _____

We Are Columbia

MEMORANDUM

TO: City Council and City Manager
From: John Fellows, Planning Administrator
CC: Hampton, Gentry
Date: November 1, 2019

RE: City of Columbia Trail Standard / Maintenance and Security Agreement between City of Columbia and Richland County

Background Summary:

- In 2015 the City of Columbia developed a two-page standard for greenways/trails.
- This document called for 14-foot and 12-foot wide paths, depending on anticipated usage levels.
- City Council reviewed and approved these standards, providing an exception for the Three Rivers Greenway section under design at the time, and staff began to coordinate with Richland County.
- On December 5, 2017 Council approved a MOU for the Richland Penny Gills Creek Greenway, Section A, which stated the trail should be 14 feet wide.
- The MOU document wording has been interpreted by the County to require that all elements of the trail must be 14 feet in width – including connections to parking areas, neighborhoods, etc., which was never the intention.
- After a great deal of time and discussion with the Richland County PDT, the County, and stakeholders, it was determined that the best solution for this issue would be to:
    - Revise existing greenway standards to provide clarity for designers
    - Incorporate into the revised standards an administrative adjustment process, through which the City that can provide relief where such relief is pragmatic and necessary.
    - Develop a new Maintenance and Security Agreement (MOU) between the City of Columbia and Richland County for the Gills Creek Greenway, Section A.

Development of revised Trail System Standards:

- Revisions were desired by both City staff and stakeholder groups to provide for clarity, and this concept and process was presented to Council in July of 2019 prior to the development of revisions.

- City staff (Parks & Recreation, Planning & Development Services, Engineering, and Public Works) began to work on new standards in late July of 2019, building upon ongoing prior discussions of areas for expansion/clarification. The new draft Trail System Standards are intended to comprehensively address best practices, as well as issues that we have discovered through the design process for various Richland Penny greenways.
- These new standards have been written in such a way as to integrate into the City's Engineering Regulations.

Draft of New Maintenance and Security Agreement between City of Columbia and Richland County

- A revised Maintenance and Security Agreement between City of Columbia and Richland County has been drafted and submitted for review by the City's Legal Department.

Next Steps:

- Upon the City's execution of the Maintenance and Security Agreement between City of Columbia and Richland County, said agreement will be sent to the County. County Council will require three readings to approve the MOU, and once approved they will need to modify their contracts with the consultant teams.

LEGAL DEPARTMENT DRAFT

RESOLUTION NO.: R-2019-105

Authorizing the City Manager to execute a Maintenance and Security Agreement between Richland County and the City of Columbia for Gills Creek Section A Greenway

BE IT RESOLVED by the Mayor and City Council this ___ day of _____, 2019, that the City Manager is authorized to execute the attached Maintenance and Security Agreement, or in a form to be approved by the City Attorney, between a Maintenance and Security Agreement between Richland County and the City of Columbia for Gills Creek Section A Greenway for the terms and conditions therein contained.

Requested by:

Assistant City Manager Gentry

_____
Mayor

Approved by:

_____
City Manager

Approved as to form:

_____
Deputy City Attorney

ATTEST:

_____
City Clerk

Introduced:
Final Reading:

Last revised: 11/11/2019
19003659

MAINTENANCE AND SECURITY AGREEMENT BETWEEN RICHLAND COUNTY AND THE CITY OF COLUMBIA FOR GILLS CREEK SECTION A GREENWAY

THIS AGREEMENT, entered into by and between the City of Columbia ("City"), a political subdivision of the State of South Carolina and Richland County ("Richland"), a political subdivision of the State of South Carolina, organized and existing under and by virtue of the laws of the State of South Carolina, collectively the "Parties."

WHEREAS, Richland intends to construct the Gills Creek Greenway Section A from the intersection of Fort Jackson Boulevard and Crowson Road to a point south or as far as funds allow for approximately 2 miles in Columbia, South Carolina ("Greenway"); and,

WHEREAS, the Parties desire to enter into this Maintenance and Security Agreement in order to allocate the respective long-term maintenance and security responsibilities for the designated items and areas between Richland and the City as specified in this Agreement;

NOW THEREFORE, in consideration of the mutual covenants provided herein, and other good and valuable consideration, the receipt of which is hereby acknowledged:

1. The Greenway.

Richland shall have designed and constructed the Greenway. The current proposed Greenway plan, which is subject to change, and will adhere to the City of Columbia Engineering Standards for Trail System design as updated on November 25, 2019. Richland will secure and provide compensation for all property rights (i.e. deeds, easements, and rights-of-way) necessary for construction and maintenance of the Greenway. Said property rights will be conveyed to the City at the completion of Greenway construction upon the City's acceptance of the project. Such acceptance shall not be unreasonably withheld. The City will require the project comply with all applicable Codes. Richland will also provide all final as-built plans delineating changes to the project during construction for future use by the City. The Greenway with the following: The parties agree that in no event will the proposed Greenway alignment include any connection to the Hampton Estates neighborhood, nor will the Greenway alignment be located in whole or in part in the Hampton Estates neighborhood, with the entirety of the system germane on the west bank.

2. The City's Responsibilities.

a. City agrees to operate those portions of the Facilities and Greenway as are in the City limits in a non-discriminatory manner with regards to race, color, religion, ancestry or national origin, sex, age, marital status, sexual orientation, gender identity, or on the basis of disability. The City further agrees to operate and maintain those portions of the Facilities and Greenway in the City limits in a safe and usable manner for their intended purposes throughout the term of this agreement. The City further agrees to provide sufficient and appropriate police patrol of the Greenway as a part of its normal police functions within the City, so long as the Greenway exists and is within the municipal limits of the City.

b. The City agrees to the following specific maintenance responsibilities for those locations within the City limits for the Greenway throughout the term of the agreement:

i. Boardwalks: City will maintain all boardwalks that may be part of the Greenway. This responsibility includes maintaining the appearance and integrity of the boardwalks.

ii. Retaining walls: City will maintain all retaining walls that may be part of the Greenway. This responsibility includes maintaining the appearance and integrity of the retaining walls.

iii. Concrete sidewalks, curbs and ADA pavers: City will maintain all concrete sidewalks, curbs, ADA pavers and pavement markings along the Greenway. This responsibility includes maintaining the appearance and integrity of these items included in the greenway project scope.

iv. Landscaping, fencing and signage: City will maintain the full range of services required for the upkeep of all new plant material, greenscreen fencing and wayfinding signage as detailed and installed in the areas encompassed within the Greenway. For avoidance of doubt, this does not obligate Richland or the City to enter into negotiations for reallocation of this particular maintenance item nor does this obligate the City to accept reallocation of this particular maintenance responsibility.

v. Bollards: City will maintain all bollards. This responsibility includes the maintaining the integrity

and appearance of the bollards proposed and built for the project.

vi. Lighting and light fixtures: Richland's contractor to install all lighting, lighting fixtures, and call boxes, and the City shall maintain all lighting, all light fixtures and call boxes after the completion of construction and acceptance of the project.

vii. Benches and garbage containers: City will maintain all benches, trash and garbage containers and provide regular collection of those. This responsibility includes maintaining the appearance and integrity of the benches and trash containers.

viii. Crosswalk surface treatment: City will maintain the crosswalk surface treatment. This responsibility will include the appearance and integrity of the crosswalk surface treatment.

ix. Parking lot: City will maintain the paved or gravel parking lot. This responsibility will include the appearance and integrity of the parking lot.

x. Public toilet facilities: City will maintain all toilet facilities. This responsibility will include the appearance, servicing and integrity of the public toilets along the Greenway.

xi. Drinking fountains: City will maintain all drinking fountains. This responsibility will include the appearance, servicing and integrity of the drinking fountains along the Greenway.

xii. Bike racks: City will maintain all racks. This responsibility will include the appearance, and integrity of the bike racks along the Greenway.

xiii. Kiosk: City will maintain any kiosks that have been planned and constructed for the project. This responsibility will include the appearance and integrity of such kiosks.

3. Miscellaneous Provisions.

a. The City's obligations shall commence upon completion of the Greenway project and acceptance by the City. It is intended that the Parties to this Agreement recognize and acknowledge that as governmental entities, their authority and capacity to perform the maintenance obligations identified herein is subject to each maintaining the respective legal authority to do so. In addition, the allocation of the maintenance obligations for the items identified will terminate with the end of the useful life of the project or the removal of a particular item being maintained.

b. This Agreement will not create any duty or responsibility to anyone other than the Parties to the Agreement, nor does it create any rights enforceable by anyone other than a party (third party beneficiary) to the Agreement.

c. This Agreement is to be governed, construed and interpreted by the laws of the State of South Carolina. The parties do not waive sovereign immunity except to the extent that litigation may be commenced in the Circuit Court for Richland County, South Carolina as may be necessary. The Parties to the Agreement will agree that litigation will not be commenced until notice is given and the parties have attempted through discussion and mediation to resolve any disputes.

d. The official executing this Agreement on behalf of the City of Columbia will represent and assert actual authority to bind the City to the obligations and commitments made in this Agreement. Similarly, the official executing this Agreement on behalf of Richland County will represent and assert actual authority to bind Richland County to the obligations and commitments made in this Agreement.

e. Waiver: The failure of either party to insist upon the strict performance of any provision of this Agreement shall not be deemed to be a waiver of the right to insist upon strict performance of such provisions or of any other provision of this Agreement at any time. Waiver of any breach of this Agreement by either party shall not constitute waiver of subsequent breach.

f. Notice: Written notice to the City shall be made by placing such notice in the United States Mail, Certified, Return Receipt Requested, postage prepaid and addressed to:

City of Columbia
City Manager
Post Office Box 147
Columbia, SC 29217

Written notice to the County shall be made by placing such notice in the United States Mail, Certified, Return Receipt Requested, postage prepaid and addressed to:

Richland County Administrator
2020 Hampton Street
PO Box 192
Columbia, SC 29202

Written notice also may be made by personal hand-delivery to the City Manager or the County Administrator.

g. Agreement Interpretation: Ambiguities in the terms of this Agreement, if any, shall not be construed against the City of Columbia nor Richland County.

h. Severability: If any provision of this Agreement is held to be illegal, invalid, or unenforceable under present or future law, such provision shall be fully severable. This Agreement shall be construed and enforced as if such illegal, invalid, or unenforceable provision were never a part hereof; and the remaining provisions of this Agreement shall remain in full force and effect and shall not be affected by the illegal, invalid or unenforceable provision or by its severance, except to the extent such remaining provisions constitute obligations of another Party to this Agreement corresponding to the unenforceable provision determined to be void or unforeseeable, all other provisions shall remain in full force and effect.

i. Captions and Headings: The captions and headings throughout this Agreement are for convenience and reference only, and the words contained therein shall in no way be held or deemed to define, limit, describe, modify, or add to the interpretation, construction, or meaning of any provision of or scope or intent of this Agreement.

j. Entire Agreement. This document contains the entire agreement between the parties and no other representations, either written or oral shall have effect. Any modification of this Agreement shall be by a signed writing between the parties.

k. Term. The term of this Agreement is twenty (20) years from the date of execution.

IN WITNESS WHEREOF, the parties hereto have executed this Agreement, in original, as of the as of the date of the last signature hereinbelow.

WITNESSES:

_____

_____

CITY OF COLUMBIA

BY: _____
Teresa B. Wilson
ITS: City Manager

DATE: _____

RICHLAND COUNTY

_____

_____

BY: _____
Leonardo Brown
ITS: County Administrator

DATE: _____

APPROVED AS TO FORM

Legal Department City of Columbia, SC

We Are Columbia

Planning and Development Services – Planning Division
1136 Washington Street, Columbia, SC 29204 • Phone: 803-545-3222• Fax: 803-733-8647

Michael Niermeier
Director of Transportation
Richland County
PO Box 192
Columbia, South Carolina 29202

November 25, 2019

Draft 11-18-2019

RE: Adjustment to Trail Standards – Gills Creek Trail.

Mr. Niermeier

This letter shall serve as notice that the City of Columbia Trail Administrative Adjustment Committee has adjusted the standards of the City's Trails Standards contained within the Engineering Standards, as noted in this letter.

The Administrative Adjustment Committee considered an adjustment pursuant to Section 9.18.11 of the City of Columbia Engineering Regulations, and examined whether your request:

- is compatible with current and planned infrastructure,
- is required to compensate for an unusual aspect of the site,
- supports the overall goals of providing for connectivity, access, and anticipated usage levels.
- is proposed to save healthy existing trees, endangered plant life, or make accommodations for wildlife habitat or ecosystem functions.
- will not pose a danger to the public health or safety
- will not pose a danger to the public health or safety
- will not impede the standard maintenance and repairs of the trail or greenway.
- does not result in a reduction and quality of the trail.

The following administrative adjustment has been granted by the Committee:

1. An adjustment of the trail width:
   An adjustment to Section 9.18.8.4.1 Urban Multi-Use Boardwalk Standards, Minimum Trail Width. This adjustment will allow for a straight clear width of 12 feet as this boardwalk is located within environmentally sensitive lands and there is no upland within this corridor is available. This adjustment shall be permitted specific to boardwalk areas from South of the Rosewood Bridge to Timberlane Drive where the boardwalk will transition to an upland and paved trail.

2. An adjustment for materials:
   An adjustment to Section 9.18.8.4.2 Urban Multi-Use Boardwalk Standards. For boardwalks located along the Gills Creek Greenway from Devine Street to Timberlane, the requirement of composite decking is adjusted to allow for premium grade pressure treated lumber for the decking material rather than a composite decking.

Modifications to the proposed plans made subsequent to this review may require re-review of the plans and/or adjustments requested above by the Committee. This letter is neither a building permit, zoning permit, maintenance agreement, nor should it to be construed as any similar authorization to construct, build, or transfer a trail (pavement or boardwalk) to the City of Columbia. All required permits must be issued prior to land disturbance or construction.

Regards,

Draft 11-18-2019

John S. Fellows, Assoc. AIA, AICP
On behalf of the Trail Administrative Adjustment Committee

Cc:
Dana Higgins, City Engineer
David Brewer, Traffic Engineer
Randy Davis, Parks Director
Todd Martin, Parks Planner,
John Fellows, Planning Administrator
Lucina Statler, Urban Design Planner,
Natavis Harris, Bike and Pedestrian Planner,

Part 9: Pedestrian, Bicycle, Complete Streets, and Trail System Design Guidelines, 9.18 Trail System Standards

9.18.1 **Introduction**. These standards shall act as general guidance for anyone designing trails within the existing or planned greenway and/or trail system that will ultimately be owned and/or maintained by the City of Columbia. All designs, equipment selections, and specifications are subject to final approval by the City and may be dependent on the special needs/circumstances of the particular project. Projects located in zoning overlay districts may be subject to different equipment standards.

9.18.2 **Purpose:** The first greenway map for the City of Columbia appeared in the 1903 Plan by Kelsey and Guild entitled *The Improvements of Columbia South Carolina – Reports to the Civic League*. Many other plans over time have suggested individual elements of such as system. Plan Columbia Land Use Plan incorporated a greenways and connections map, and was formally adopted by City Council in 2015. That same year, the City adopted a comprehensive pedestrian and bicycle plan entitled *Walk Bike Columbia*, which made detailed recommendations for pedestrian, bicyclist, and multi-use facility locations throughout the City. These two documents define a system of movement and recreation throughout the community. Columbia Compass: Envision 2036 seeks to build upon these efforts through the development of a clearer and articulate trail system map for the community.

9.18.3 **Definitions**:

9.18.3.1 **Trail:** a planned, marked, and established path or route that may be found through recreational lands, lands left in a natural state, parks, plazas, and urban streets through the community.

9.18.3.2 **Trail System:** a planned network of naturalized greenways, urban trails, and trails in rail corridors that provides connectivity to and between natural areas, residential areas, commercial centers, and points of interest.

9.18.3.3 **Spur Trails**: Spur trails provide connections from main network of the trail system to destinations that are not directly adjacent to the main route. Spur trails may serve to provide connections to specific residential, commercial, or natural areas, or employment centers, schools, or other points of interest.

9.18.3.4 **Clear Height**: Clear height is the designated vertical travelway of a trail. For compliance purposes, this width is measured plumb to the trail, from trail surface, within the designated clear width.

9.18.3.5 **Clear Width**: Clear width is the designated horizontal travelway of a trail. For compliance purposes, this width is measured between the interior face of each railing, curb, or bull rail. Projections of up to 12 inches into the required clear width may be allowed for items such as lighting, hand rails, and call boxes. Projections should be standardized per one side were possible, so users can expect projections. All projections shall comply to ADA standards.

For Council 11-25-2019

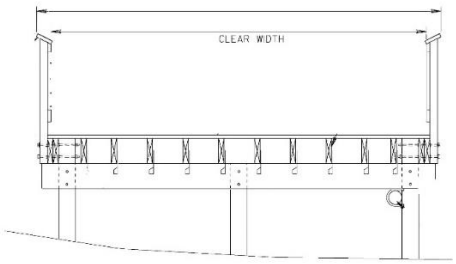

Diagram: Clear Width

9.18.4 **Trail Classifications**. The City recognizes three classifications of trails within the City's trail system consisting of Urban Trails, Naturalized Greenways, and Trails in Rail Corridors. Urban trails and naturalized greenways are further defined by anticipated level of use and whether pedestrians and bicyclists share a facility or utilize separate facilities along the same trail corridor. The trail system classification of use is based upon heavy or light volumes of users for a given location. These classifications as noted are again more closely defined based upon if users are combined or sharing the same trail or if they are separated and have a unique facility based upon travel or use mode. In the cases of separated facilities, the trail type is then categorized based upon pedestrians or cyclist. Trails in rail corridors are not characterized by use levels and should always utilize shared facilities, however these trails are split into two subtypes- trails within abandoned rail corridors and trails beside active rail corridors.

For Council 11-25-2019

Figure 1: Diagram of trail types and subtypes

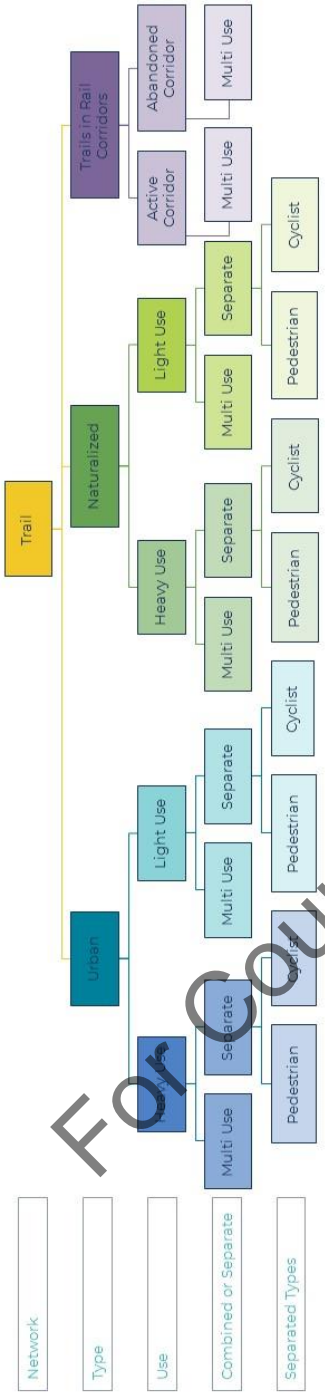

For Council 11-25-2019

9.18.4.1 **Trail Types**: The three types of trails are defined as follows:

9.18.4.1.1 **Urban Trails**: Urban trails are existing or proposed linear trails within the City usually found along streets and roadways, and other developed areas. Along urban trails, special attention to street design, plantings, and other amenities is made in order to accommodate pedestrians, bicyclists, and other users. Urban trails may be comprised of multi-use facilities or

separated facilities by user type, and these trails may also traverse through plazas, parks, or other public spaces. Urban trails are further categorized as heavy use or light use.

9.18.4.1.2 **Naturalized Greenways**: Naturalized greenways represent existing or proposed linear trails that are found in areas that have been left natural or are being returned to a natural state. Such areas generally have significant tree cover or native plantings and may include significant open areas. Naturalized greenways tend to be adjacent to environmentally significant features such as waterways or wetlands. Multi-use facilities are typically comprised of a paved (asphalt or concrete) surface or boardwalk. Naturalized greenways may connect to urban trails and/or adjacent residential or commercial development, and make connections from various built and natural features throughout the community. Connections to separated off-road facilities for either pedestrians or bicyclists may also be incorporated along naturalized greenways. Naturalized greenways are further categorized as heavy use or light use.

9.18.4.1.3 **Trails in Rail Corridors**: Rail-trails are multipurpose public paths created from former or along existing railroad corridors. These paths are flat or gently sloping, making them easily accessible.[1] Such trails are often built within abandoned rail corridors, however they may also be located parallel to existing active rail corridors.

9.18.4.1.4 **Other Facility Types**: Other types of facilities that may be found connecting to trails may include: sidewalks, paths, on- or off-road bike facilities, and hiking trails. Standards for these other facility types are also set forth in Part 9.

9.18.4.2 **Usage Subtypes**: The further subdivision of trail types by anticipated usage provides for the development of usage-specific requirements for facility width, the provision of equipment, and the location of amenities. Usage, as indicated in the trail system map (Figures 2 & 3) is based upon three factors: the current density (2016 Census) of the population that is within ¼ to ½ mile of the trails; anticipated and projected population growth (Central Midlands Council of Governments 2018); and the vision set forth by the future land use maps (City of Columbia). The anticipated volume of users will increase over time and as connectivity grows. Usage subtypes are as follows:

9.18.4.2.1 Heavy Use. A heavy use trail is one that will have the highest number of users at peak periods once the system is fully link together. Heavy use trails require a 14-foot clear facility width, whether comprised of an approved paved surface or boardwalk.

9.18.4.2.2 Light use. A light use trail may have lighter usage due to a variety of factors, such as an increased distance to denser areas or points of interest. Light use trails require a 12-foot trail or boardwalk; in areas that may see higher volumes or which contain points of interest along the trail bump outs at designated intervals or at these points of interest are encouraged.

For Council 11-25-2019

[1] http://www.railstotrails.org/

9.18.5 **Trail System Map.** The illustrative trail system maps below indicate facility types and usage subtypes.

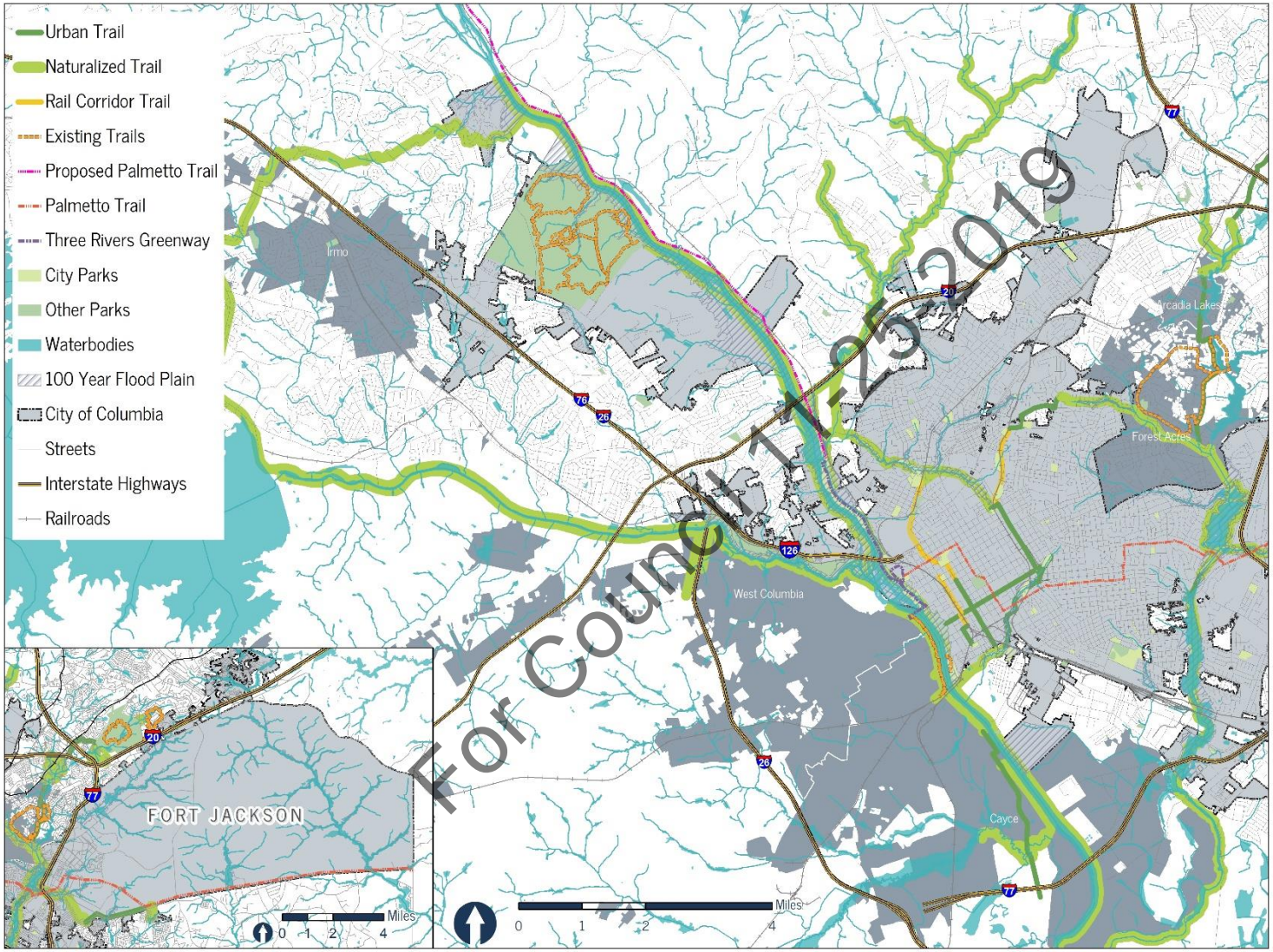

Figure 2: Illustrative trail system map showing regional system; trails outside of the City of Columbia are shown to illustrate future or possible network connections.

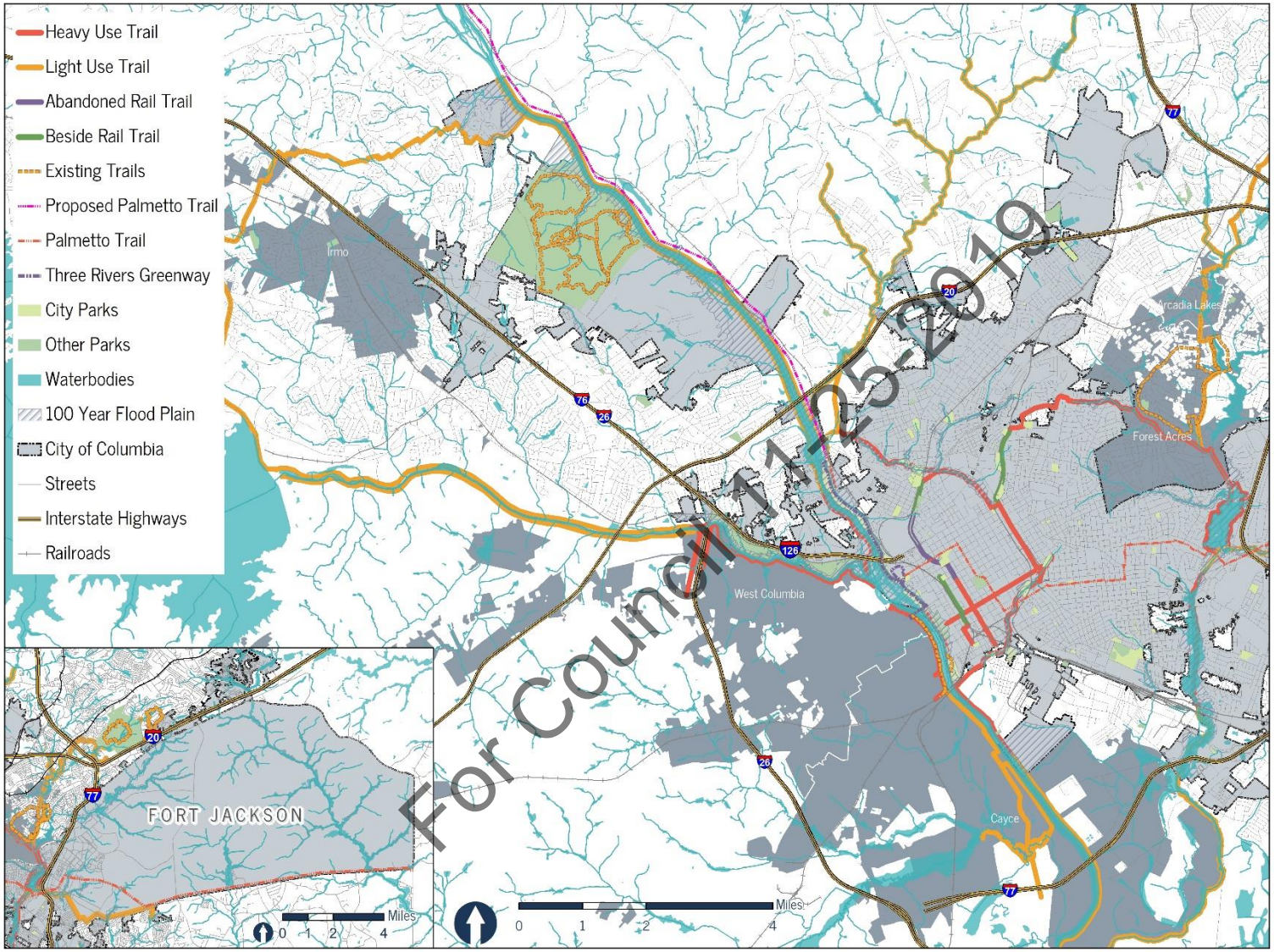

Figure 3: Detailed illustrative map of trail system core.

9.18.6 Facility Standards

Facility standards set forth in this section are specific to multi-use trails and some standards vary by trail type and subtype. These standards are set forth specific to multi-use trails within the mapped system, and are meant to expand upon the standards set forth for shared use paths and greenways in other sections of Part 9. Standards for separated (bike and pedestrian) facilities can be found in Part 9: Sections 1 through 17 of the Pedestrian, Bicycle, Complete Streets, and Trail System Design Guidelines of the City of Columbia Engineering Regulations. The following standards apply to all trail types and subtypes:

9.18.6.1. **Right-of-way**. Where trails traverse private property, rights-of-way in excess of the trail width shall be obtained to provide for adequate maintenance. Right-of-way width shall be at least twenty (20) feet wide, and right-of-way centerline shall match the centerline of the designed trail surface. Right-of-way height, if limited by the right-of-way agreement, shall be written to include a total height which extends from the surface of the ground to at least 10 feet above the surface of the trail.

9.18.6.2. **Clear Height**. A minimum clear height of eight feet, four inches (8'4") from the surface of the greenway must be provided for.

9.18.6.3 **ADA Accessibility.** All greenways must be designed to be compliant with current ADA standards.

9.18.6.4 **Tree Protection and Health**. Trees located within the 50' surveyed swath which are in poor condition or which are non-native, invasive species as defined by the Southeast Exotic Pest Plant Council may be marked for removal and if so, should be removed prior to greenway construction. Grand trees in fair or good condition shall be flagged and protected during construction using best practices. In no case shall any part of the proposed greenway surface, structure, or utility trenching be located within the radius of the structural root zone of any trees to remain on site; where the greenway surface, structure, or utility trenching will encroach into the structural root zone of a tree, the path must be realigned or the tree must be removed prior to construction to prevent future maintenance issues. The structural root zone is defined as the zone of rapid root taper that provides the tree stability against wind throw, and is calculated as follows:

Radius of the Structural Root Zone (in feet) = Inches of Diameter at Breast Height (DBH) x 1/3. No utility trenching shall occur in areas where conduit shall be encased beneath concrete pathways.

9.18.6.5 **Curve Radii**. Curve radii must be designed to allow for the turning radii of parks maintenance equipment, as defined by the Parks and Recreation Department at the time of design.

9.18.6.6 **Sight Distance**. Sight distance shall be designed to accommodate all user types and speeds anticipated for the specific context, at both the average and max user speeds of each user type within the context.

For Council 11-25-2019

9.18.6.7 **Signage**. Multi-use trail signage shall be used at start and ending of the trail and at points of access. Wayfinding or other directional signage may be required. Signage design shall be coordinated to match the City's adopted wayfinding system. All signage shall include a vandalism-proof coating.

9.18.6.8 **Power Supply.** Electrical conduit shall be buried, and boxes for lights shall be provided, with junction boxes at every light for conduit. Junction boxes should be a Quazite 12" x 12" x 12" with electric on the lid, or equivalent, as approved by the City. When installing emergency call boxes and/or cameras, the electrical circuit must remain on at all times, which will require photo controls on each light or the installation of a dedicated circuit for call boxes and/or cameras. All conduit shall be sized with additional capacity necessary to accommodate future camera installation. Box locations will be determined after the photometric plan has been done. Additional requirements, including those related to power for facilities and events and the use of or installation of new duct banks, may be identified on a case-by-case basis.

9.18.6.9 **Railings.** Where railings or vertical safety barriers are required, they must be constructed out of painted aluminum.

9.18.6.10 **Parking**. Parking may be required at trailheads or key locations, and the required number of spaces should be defined both by the anticipated level of use and the context for the parking area. Access to parking areas may be required to be restricted by gates or other access controls. Where trail connections are made from residential streets, signage regulating on-street parking may be required.

9.18.6.11 **Restrooms.** ADA accessible restrooms should be placed at major trail heads and appropriate locations along trail as deemed necessary per anticipated volume of users. Typical restrooms will be located along high pedestrian traffic routes and with high use trail amenities such as parking for security, maintenance and utility access. Building orientation should locate entrances toward the most visible areas and away from prevailing winds. Design must comply with all building codes and accommodate all users as defined in the design process and review. The design process should also consider other amenities such as trail maintenance storage and staff accommodation. Whether restrooms are required along a proposed trail segment, and their approximate location(s) (if required), shall be determined at the conceptual design phase by the Trail Administrative Adjustment Committee.

9.18.6.12 **General Site Fixtures**. General site fixtures may include: cameras, lighting, site furnishings, call boxes, or other such items. All general site fixtures shall have a black powder coat finish unless otherwise specified. Equipment brands, where applicable, are listed below with each site fixture.

> 9.18.6.12.1 **Lighting**. Lighting shall be an LED Granville full cut off fixture or a contemporary fixture (pending review) that could be selected on a project-specific basis. A photometric plan will be provided indicating the lighting design, location, and specifications. Lighting shall be directionally focused down and along the trail surface, and shall provide a minimum

For Council 11-25-2019

foot-candle rating of 0.5 foot-candles along the trail surface. Light may be cast downward 360 degrees from the light source or may only be directed 180 degrees, based upon design and site specifics. Electrical conduit shall be buried, and boxes for lights shall be provided, with conduit pulled no more than 500 feet between boxes. Box locations will be determined after the photometric plan has been done. When a trail enters a public plaza park, or other defined area with design guidelines, the lighting shall coordinate with the public plaza, park, or defined area.

9.18.6.12.2 **Mileage markings and signage**. Mileage markings and signage shall be placed so as to be visible from both directions of travel, and shall be located at trailheads and along the trail in quarter-mile intervals. The design of such markings and signage must be approved by the City of Columbia.

9.18.6.12.3 **Call Boxes**. Call boxes are required by the Columbia Police Department on all trails; the required interval for call box placement may also vary per project.

9.18.6.12.4 **Site Furnishings**. All site furnishings shall be located outside of the defined clear width of the trail. In addition to the required site furnishings listed below, water fountains (Equipment specification: Most Dependable Fountains Model 10155 SM Water Fountain) and bicycle repair stations (Equipment specification: Dero FIXIT Bicycle Tire Station) may be required by the City on a project-specific basis at trailheads and gateways. The following are required site furnishings for all multi-use trails.

9.18.6.12.4.1 **Mutt mitts**. Mutt mitts shall be placed at a distance of ¼ mile increments on heavy use trails or trails in and along rail corridors; mutt mitts shall be placed at a distance of ½ mile increments on light use trails. Equipment specification: Mutt Mitt Pet Waste Station.

9.18.6.12.4.2 **Waste receptacles.** Trash and recycling receptacles shall be provided at a distance of ¼ mile increments on heavy use trails or trails in and along rail corridors; waste receptacles shall be placed at a distance of ½ mile increments on light use trails. Equipment specification: Victor Stanley ES-242 Trash Receptacle with recycle lid and band for recycling receptacle.

9.18.6.12.4.3 **Seating**. Benches shall be located outside of the clear width of the trail and shall be placed at ¼ mile intervals on heavy use trails or trails in and along rail corridors and at ½ mile intervals on light use trails. Seating intervals may be shifted and/or increased to provide seating at key locations as reviewed or approved by the City on a project-specific basis. Benches shall be mounted to a concrete slab which is poured adjacent to the trail surface. Equipment specification: Victor Stanley EVA Bench; all steel slats in black, center armrest, and both in ground and surface mount as needed.

(Insert images of items when document is to be formatted)

For Council 11-25-2019

9.18.6.13 **Trail Development in Flood Hazard Areas.** Trail development in special flood hazard areas must be designed with functionality and sustainability in mind. In addition to designing for and obtaining a flood development permit, the following standards must be adhered to ensure the longevity of the trail system:

9.18.6.13.1 **Footings**. Footings for boardwalk piers must be larger and deeper and designed to withstand scouring during flood events.

9.18.6.13.2 **Paved trails**. Asphalt shall not be installed in flood hazard areas; poured concrete is the only acceptable material for paved trails in flood hazard areas. Poured concrete must include a vertical footer adjacent to the area of anticipated flooding which is constructed at a depth and width great enough to withstand scouring of floodwaters during a flood event while preventing the undermining of the concrete pathway.

9.18.6.13.3 **Electrical equipment**. Any electrical equipment or conduits installed for the purposes of greenway amenities shall be flood proofed/sealed to prevent water intrusion within flood hazard areas.

9.18.6.13.4 **Breakaway design**. Any vertical elements located within the flow trajectory must be designed to breakaway in the event of flooding so as not to further compromise the structural integrity of the trail surface.

9.18.6.14 **Additional Standards**. Additional requirements including power for facilities and events may be identified on a case-by-case basis.

9.18.7. **Facility-specific standards**. Additional facility standards vary by facility type and subtype, and address the following categories:

9.18.7.1 **Trail Construction Materials**. Multi-use trails are generally constructed out of asphalt with concrete banding, however construction materials may be adjusted in flood-prone or environmentally sensitive areas to include concrete surfaces or composite boardwalks. Where driveway locations will result in heavily-loaded traffic crossing the trail surface for access, the trail construction materials must be designed to accommodate and withstand these vehicular loads.

9.18.7.2 **Trail Width**. Providing for adequate and appropriate trail width is essential to an interconnected trail system. The users of trails experience the trail at a human scale, and appropriate trail width is necessary to provide for safe passage and to avoid potential conflict among user types. The anticipated volume of users will increase over time and as connectivity grows. As such, providing for adequate and appropriate width of facilities is important from the onset, and required widths correspond to anticipated usage.

9.18.7.3 **Directional and/or Use Markings and Signage**. Directional and/or use markings and signage may be provided on the trail surface to identify the direction of travel or to delineate a user-

For Council 11-25-2019

specific path for pedestrians or bicyclists. The design of such markings and signage must be approved by the City of Columbia.

9.18.7.4 **Spur Trails**. Trails connections not included within the trail system map may be considered as an addition to said map, or may be considered separately as spur trails. The width and design of spur trails shall be based on anticipated usage and may vary throughout the trail system, however spur trails must allow for drivable service vehicle access, and spur trail connections to the trail system must be designed to provide for curve radii that allows service vehicles to safely access the trail system.

9.18.8 **Urban Trail Standards.** Urban Trails can take on a number of forms, but are developed along existing roadways and are part of the urban fabric. Some urban trails may be developed as a combination of facilities such as a sidewalk or bike lane to accommodate users. In some cases, urban trails will traverse parks, plazas, and other similar spaces open public spaces. Where facilities are separated by use type (bike and pedestrian), facilities shall comply with Part 9: Pedestrian, Bicycle, Complete Streets, and Trail System Design Guidelines of the City of Columbia Engineering Regulations.

Standards for Multi-use Urban Trails are separated into heavy use and light use. An additional subtype, specific to the Innovista Trail, is also listed. Additional standards for boardwalks are identified, however boardwalks will fall under and be guided by the standards set forth for Urban Multi-use Heavy Use or Urban Multi-use Light Use trails below; where standards set forth for the trail subtype and boardwalks do not align with one another, the more restrictive shall apply.

For Council 11-25-2019

9.18.8.1 **Urban Multi-use Heavy Use Trail Standards**

9.18.8.1.1 **Construction Material**. Multi-use trails integrated into urban infrastructure as sidepaths along roadways shall be comprised of concrete or asphalt pathways. Where asphalt is utilized, multi-use trails should include a one (1) foot wide concrete band along both sides. Where these trails traverse parks, plazas, or other open spaces, the hardscaped surface may be modified to a more decorative but acceptable material in order to match the park or plaza design. Construction materials shall also be adjusted in flood-prone or environmentally sensitive areas to include concrete surfaces or composite boardwalks. Asphalt shall not be used in flood prone areas and shall transition to concrete.

9.18.8.1.2 **Minimum Trail Width**. A paved clear width of 14 feet is required.

9.18.8.1.3 **Lighting**. Lighting shall be affixed to a poured concrete pad.

9.18.8.2 **Urban Multi-use Light Use Trail Standards**

9.18.8.2.1 **Construction Material**. Multi-use trails integrated into urban infrastructure as sidepaths along roadways shall be comprised of concrete or asphalt pathways. Where asphalt is utilized, multi-use trails should include a one (1) foot wide concrete band along both sides. Where these trails traverse parks, plazas, or other open spaces, the hardscaped surface may be modified to a more decorative but acceptable material in order to match the park or plaza

design. Construction materials may also be adjusted in flood-prone or environmentally sensitive areas to include concrete surfaces or composite boardwalks. Asphalt shall not be used in flood prone areas and shall transition to concrete.

9.18.8.2.2 **Minimum Trail Width**. A paved clear width of 12 feet is required.

9.18.8.2.3 **Lighting**. Lighting shall be affixed to a poured concrete pad.

9.18.8.3 **Innovista Trail Standards.** The Innovista Trail is a specialty trail which travels along Wayne and Pulaski streets as well as the railroad, between Hampton and Catawba streets, and shall comply to the following standards.

9.18.8.3.1 **Trail Construction Materials and Minimum Trail Width.** The paved trail width shall be 20 feet, comprised of a nine (9) foot wide strip of asphalt and a 10 foot wide strip of concrete and a one (1) foot wide concrete band shall be provided on the exposed asphalt edge.

9.18.8.3.2 **Directional Markings**: markings on the asphalt shall provide bike symbols for directional purpose and a dash line to separate directional use. Pedestrian symbol shall be used on the concrete area identifying the pedestrian area.

9.18.8.3.4 **General Site Fixtures** All site features shall match Innovista design standards.

9.18.8.3.4.1 **Lighting**. Shall coordinate with Innovista design standards. In the case of the trail extending north of Gervais Street lighting shall be a LED full cut off Granville Fixture.

9.18.8.4 **Urban Multi-use Boardwalk Standards.** In urban conditions boardwalks should be used sparingly. However, there may be selected areas where the use of a boardwalk is necessary, or a boardwalk may be preferred to allow a user to access a specific amenity or viewpoint.

9.18.8.4.1 **Minimum Trail Width**. Boardwalks in areas identified as heavy use shall be designed with either a clear width of 14 feet or a clear width of 12 feet with bump outs placed at an average interval of 200 feet. Boardwalks in areas identified as light use shall be designed with either a clear width of 12 feet or a clear width of 10 feet with bump outs placed at an average interval of 200 feet. Where bump outs are utilized for heavy or light use boardwalks, they may include furnishings or site fixtures but shall be no less than four (4) feet wide by 15 feet long.

9.18.8.4.2 **Boardwalk Materials**. Specific to boardwalk construction, railings and vertical safety barriers must be constructed out of painted aluminum; chain link fencing is not a permissible barrier. Composite decking must be utilized.

9.18.8.4.3 **Structural Design**. The boardwalk, inclusive of any pullouts, must be designed to accommodate specific fully-loaded vehicles as specified by the City (and any other agency accepting maintenance, if applicable) on a per-project basis. Signed and sealed engineered plans must indicate that the design meets or exceeds the required load level.

For Council 11-25-2019

9.18.8.4.4 **Lighting**. In addition to the standards set forth above, it is preferred that the boardwalk lighting be installed in line with the railing, vertical safety barrier, or other vertical element. In no case shall the lighting interfere with the required clear width.

9.18.8.4.5 **Call Boxes**. It is preferred that call boxes are installed in line with the railing or vertical barrier system or at a pull off and outside the required clear zone. The distance between conduit access points shall be no more than 500 feet. Electrical conduit shall be accessible from the top of the deck for repair purposes.

9.18.8.4.6 **Site Furnishings**. Site furnishings shall be installed as specified under the requirements set forth in 9.18.6.12.4, however furnishings on opposing sides of the trail shall be staggered at least 50 feet from one.

9.18.9 Naturalized Greenway Standards. Naturalized greenways can take on a number of forms, but are developed green spaces, most often as a component of a greater linear park. Some greenways may be developed as a backbone through a natural area, off of which smaller, use-specific trails may be developed. In some situations, greenways may contain spaces for scenic overlooks, fields, picnic areas, or other non-hardscaped amenities. Where transitions occur along roadways, facilities may be separated by use type (bike and pedestrian). In such cases, facilities shall comply with Pedestrian, Bicycle, Complete Streets, and Trail System Design Guidelines of the City of Columbia Engineering Regulations.

Standards for Multi-use Naturalized Greenways are separated into heavy use and light use. Additional standards for boardwalks are identified, however boardwalks will fall under and be guided by the standards set forth for Heavy Use Multi-use Naturalized Greenway trails or Light Use Multi-use Naturalized Greenway trails below; where standards set forth for the trail subtype and boardwalks do not align with one another, the more restrictive shall apply.

9.18.9.1 **Heavy Use Multi-use Naturalized Greenway Trail Standards**

9.18.9.1.1 **Construction Material**. Multi-use trails along naturalized areas shall be comprised of asphalt pathways with a one (1) foot wide concrete band along both sides. Where these trails traverse parks, plazas, or other open spaces, the hardscaped surface may be modified to a more decorative but acceptable material in order to match the park or plaza design. Construction materials may also be adjusted in flood-prone or environmentally sensitive areas to include concrete surfaces or composite boardwalks.

9.18.9.1.2 **Minimum Trail Width**. A paved clear width of 14 feet is required.

9.18.9.1.3 **Lighting**. Lighting shall be required along all Naturalized Greenway trails, however innovative solutions to unique site specific situations shall be consider and unique solutions may be used on a case by case basis with designs approved by the City of Columbia Trail Administrative Adjustment Committee.

9.18.9.2 **Light Use Multi-use Naturalized Greenway Trail Standards**

For Council 11-25-2019

9.18.9.2.1 **Construction Material**. Multi-use trails along naturalized areas shall be comprised of asphalt pathways with a one (1) foot wide concrete band along both sides. Where these trails traverse parks, plazas, or other open spaces, the hardscaped surface may be modified to a more decorative but acceptable material in order to match the park or plaza design. Construction materials may also be adjusted in flood-prone or environmentally sensitive areas to include concrete surfaces or composite boardwalks.

9.18.9.2.2 **Minimum Trail Width**. A paved clear width of 12 feet is required.

9.18.9.2.3 **Lighting**. Lighting shall be required along all Naturalized Greenway trails, however innovative solutions to unique site specific situations shall be consider and unique solutions may be used on a case by case basis with designs approved by the City of Columbia Trail Administrative Adjustment Committee.

9.18.9.3 **Multi-use Naturalized Greenway Boardwalk Standards.** Boardwalks should be used sparingly, but may be appropriate in more environmentally sensitive areas. However, there may be selected areas where the use of a boardwalk is necessary, or a boardwalk may be preferred to allow a user to access a specific amenity or viewpoint.

9.18.9.3.1 **Minimum Trail Width**. Boardwalks in areas identified as heavy use shall be designed with either a clear width of 14 feet or a clear width of 12 feet with bump outs placed at an average interval of 200 feet. Boardwalks in areas identified as light use shall be designed with either a clear width of 12 feet or a clear width of 10 feet with bump outs placed at an average interval of 200 feet. Where bump outs are utilized for heavy or light use boardwalks, they may include furnishings or site fixtures but shall be no less than four (4) feet wide by 15 feet long.

9.18.9.3.2 **Boardwalk Materials**. Specific to boardwalk construction, railings and vertical safety barriers must be constructed out of painted aluminum; chain link fencing is not a permissible barrier. Composite decking must be utilized for decking.

9.18.9.3.3 **Structural Design**. The boardwalk, inclusive of any pullouts, must be designed to accommodate specific fully-loaded vehicles as specified by the City (and any other agency accepting maintenance, if applicable) on a per-project basis. Signed and sealed engineered plans must indicate that the design meets or exceeds the required load level.

9.18.9.3.4 **Lighting.** In addition to the standards set forth above, it is preferred that the boardwalk lighting be installed in line with the railing, vertical safety barrier, or other vertical element. In no case shall the lighting interfere with the required clear width.

9.18.9.3.5 **Call Boxes**. It is preferred that call boxes are installed in line with the railing or vertical barrier system or at a pull off and outside the required clear zone. The distance between conduit access points shall be no more than 500 feet. Electrical conduit shall be accessible from the top of the deck for repair purposes.

For Council 11-25-2019

9.18.9.3.6 **Site Furnishings**. Site furnishings shall be installed as specified under the requirements set forth in 9.18.6.12.4, however furnishings on opposing sides of the trail shall be staggered at least 50 feet from one another.

9.18.10 Standards for Trails in and along Rail Corridors. Trails in rail corridors are divided into two subcategories: trails in abandoned rail corridors and trails along active rail corridors. Trails in rail corridors will rarely require boardwalks, however additional standards specific to boardwalk development are also specified. The standards set forth below in subsections 9.18.10.1 through 9.18.10.2 apply to all trails in or alongside rail corridors. Standards specific to subtypes of trails in and along rail corridors and boardwalk construction in and along these corridors are set forth in subsections 9.18.10.3, 9.18.10.4, and 9.18.10.5.

9.18.10.1 **Construction Material**. Multi-use trails in or along rail corridors shall be comprised of asphalt pathways with a one (1) foot wide concrete band along both sides. Where these trails traverse parks, plazas, or other open spaces, the hardscaped surface may be modified to a more decorative but acceptable material in order to match the park or plaza design. Construction materials may also be adjusted in flood-prone or environmentally sensitive areas to include concrete surfaces or composite boardwalks.

9.18.10.2 **Lighting**. Lighting shall be affixed to a poured concrete pad.

9.18. 10.3 **Standards for Trails in Abandoned Rail Corridors**

9.18.10.3.1 **Minimum Trail Width**. A paved clear width of 14 feet is required.

9.18.10.4 **Standards for Trails Along Active Rail Corridors**

9.18.10.4.1 **Minimum Trail Width**. A paved clear width of 12 feet is required.

9.18.10.4.2 **Rail Crossings**. Where the multi-use path crosses active rail lines, crossing design shall, at a minimum, adhere to the safety and best practices guidance, including but not limited to that set forth by the Walk Bike Columbia master plan and the City of Columbia engineering standards.

9.18.10.5 **Boardwalk Standards for Trails in and along Rail Corridors.** Boardwalks should be used sparingly in and along rail corridors. However, there may be selected areas where the use of a boardwalk is necessary, or a boardwalk may be preferred to allow a user to access a specific amenity or viewpoint.

9.18.10.5.1 **Minimum Trail Width**. Boardwalks in abandoned rail corridors shall be designed with either a clear width of 14 feet or a clear width of 12 feet with bump outs placed at an average interval of 200 feet. Boardwalks along active rail corridors shall be designed with either a clear width of 12 feet or a clear width of 10 feet with bump outs placed at an average interval of 200 feet. Where bump outs are utilized for boardwalks in abandoned or active rail corridors,

For Council 11-25-2019

they may include furnishings or site fixtures but shall be no less than four (4) feet wide by 15 feet long.

9.18.10.5.2 **Boardwalk Materials**. Specific to boardwalk construction, railings and vertical safety barriers must be constructed out of painted aluminum; chain link fencing is not a permissible barrier. Composite decking must be utilized.9.18.10.6.3

9.18.10.5.3 **Structural Design**. The boardwalk, inclusive of any pullouts, must be designed to accommodate specific fully-loaded vehicles as specified by the City (and any other agency accepting maintenance, if applicable) on a per-project basis. Signed and sealed engineered plans must indicate that the design meets or exceeds the required load level. Structural design for boardwalks in active rail corridors shall address the impact of adjacent rail travel on the structure, to include mitigation of vibrations and other such structural concerns.

9.18.10.5.4 **Lighting**. In addition to the standards set forth above, it is preferred that the boardwalk lighting be installed in line with the railing, vertical safety barrier, or other vertical element. In no case shall the lighting interfere with the required clear width.

9.18.10.5.5 It is preferred that call boxes are installed in line with the railing or vertical barrier system or at a pull off and outside the required clear zone. The distance between conduit access points shall be no more than 500 feet. Electrical conduit shall be accessible from the top of the deck for repair purposes.

9.18.10.5.6 **Site Furnishings**. Site furnishings shall be installed as specified under the Urban Multi-use Trail subtype requirements above, however furnishings on opposing sides of the trail shall be staggered at least 50 feet from one another.

9.18.11 **Administrative Adjustment**. An Administrative adjustment may be requested and granted on a case by case basis.

9.18.11.1 **Purpose**: The purpose of this subsection is to establish a uniform mechanism to approve minor deviations from these standards.

9.18.11.2 **Applicability**. The procedures and standards in this sub section (9.18) apply to the review of and decisions on designees of infrastructure items for trails within the existing and planned trail system.

9.18.11.3 **Trail Administrative Adjustment Committee**. The Administrative Adjustment committee shall consist of the Parks Director, Parks Planner, Planning Administrator, Urban Design Planner, Bike and Pedestrian Planner, Traffic Engineer, and City Engineer. Each representative retains the right to appoint a qualified designee from their department or division to serve on the committee in their stead. The Committee may request the presence and/or comments of additional staff or experts in order to provide contextual information on a project specific basis.

For Council 11-25-2019

9.18.11.4 **Administrative Adjustment Decision Standards**. An Adjustment shall be approved upon the finding that the situation or request demonstrated that all of the following standards are met:

9.18.11.4.1 The administrative adjustment is consistent with the character of the development on surrounding land and is compatible with current and future planned infrastructure.

9.18.11.4.2 The administrative adjustment:

9.18.11.4.2.1 Is required to compensate for some unusual aspect of the site.

9.18.11.4.2.2 Supports the overall goals of providing for connectivity, access, and anticipated usage levels.

9.18.11.4.2.3 Is proposed to save healthy existing trees, endangered plant life, or make accommodations for wildlife habitat or ecosystem functions.

9.18.11.4.3 The administrative adjustment will not pose a danger to the public health or safety

9.18.11.4.4 An adverse impact will be mitigated, to the maximum extent practicable.

9.18.11.4.5 The administrative adjustment will not impede the standard maintenance and repairs of the trail or greenway.

9.18.11.4.6 The trail section is not submitted to a series of multiple administrative adjustment that result in a reduction and quality of the trail.

9.18.11.4.7 Administrative adjustments may be granted for the following:

9.18.11.4.7.1 **Width**. Variations in width may be allowed in instances where constraints do not allow for greater width. In constrained areas, a reduction of width may be appropriate. If a reduction in width is requested due to constraints, the reduction in width shall solely be requested for constrained areas as specified on a site plan, and where constraints are not present the full clear width shall be required. The clear width of the trail shall not be reduced to less than 10-feet; in extreme circumstances the administrative committee may consider greater reductions for very short distances where crossings are required (under a bridge, across railroad tracks, etc.). where reductions less than 10 feet are granted special signage, traffic calming, and/or other elements may be required to ensure safety

9.18.11.4.7.2 **Location of site furnishings or fixtures.** Variations in locations of site furnishings or fixtures may be allowed in instances where constraints are present at the required intervals, or where points of interest or overlooks make a shift in the otherwise required placement reasonable.

9.18.11.4.7.3 **Materials and equipment types**. Variations in materials or equipment types may be allowed if the material or equipment required by this section is either unavailable or inappropriate for the specific project. Where such variation is requested, information

For Council 11-25-2019

regarding the suitability of such material may be required, and substitute material and equipment types must be approved by the City of Columbia.

For Council 11-25-2019

TO: Teresa Wilson, City Manager

FROM: Ashley M. Jenkins

DATE: November 12, 2019

SUBJECT: Design/Development Review Commission

Purpose: The purpose of this commission is to advise the city council upon the designation of landmarks, landmark districts, architectural conservation districts, and protection areas; carry out those regulatory duties relating to subsection (b)(1) of this section as set forth in this section; plan and direct continuing studies of areas, physical features and improvements in the city
relating to urban design, historic preservation, beautification, civic improvement and other
considerations in furtherance of this article, and in doing so, properly coordinate such plans and
studies with the various departments and agencies of the city; engage in educational activities related to the furtherance of this article in order to promote appropriate urban design, historic preservation and conservation of historic or aesthetic features of the city; advise, assist and represent the best interest of the city in matters relating to coordination of and assistance to other public bodies and private interests in activities related to this article; advise and assist the city council in acquisition of any gift, grant, purchase, bequest, device, lease, fee simple or lesser interest, development right, easement (including scenic easement), covenant or other contractual right which may accrue to the furtherance of the purposes of this article; advise the city council in actions of eminent domain taken in furtherance of the purposes of this article; upon request of the city council, manage, control and maintain any property related to the purpose of this article or to the purposes of the commission.

Composition: This commission is comprised of nine (9) members, of whom at least one shall be an architect registered in the state, at least one shall be a lawyer admitted to practice before the supreme court of the state, at least one shall be experienced as an architectural historian, at least one shall be experienced as a city planner, at least one shall be a real estate developer or licensed real estate broker, and one shall be an architect with historic preservation experience and the remainder, if any, shall be persons who, by reason of other experience or education, shall be qualified for service on such commission. Appointees serve a three (3) year term with the possibility of one (1) re-appointment.

Action: Council is asked to appoint two (2) appointees that represent the following: **one (1) appointee that will serve as a Community Representative for District Two and one (1) appointee that will serve as a Planner.**

District Representation:

District 1 – 2
District 2 – 0
District 3 – 3
District 4 – 1
Outside City Limits – 0

District Representation of Applicants:

There are four **(4)** applications for consideration.

District 1 – 0
District 2 – 0
District 3 – 3
District 4 – 0
Outside City Limits – 1

Applicants

James Evans
1029 Butler Street
Columbia, SC 29205
District 3

Project Consultant
Price Waterhouse Coopers
1333 Main Street
Columbia, SC 29201
District 2

H. Freeman Belser
400 Saluda Avenue
Columbia, SC 29205
District 3

Attorney
Belser & Belser, PA
1325 Park Street, Suite 300
Columbia, SC 29201
District 2

Sanford Dinkins
1 Myrtle Court
Columbia, SC 29205
District 3

VP and Senior Engineer
Cox and Dinkins, Inc.
724 Beltline Blvd.
Columbia, SC 29205
District 3

Destine J. Hicks
350 Powell Rd. Apt. 1111
Columbia, SC 29203
Outside City Limits

Legislative Aide
SC House of Representatives
1105 Pendleton Street, Suite 306
Columbia, SC 29201
District 2

CURRENT MEMBERS	APPROVED	STARTS	ENDS
Bob Wynn **- RESIGN** 1717 Wayne Street Columbia, SC **District 2** ***Community Representative- District 2***	11/12/2013	02/01/2014	02/28/2017 02/28/2020
Harris Cohn 110 Old Hampton Loop Columbia, SC 29209 **District 4** ***Real Estate Broker/Developer***	11/12/2013	02/01/2014	02/28/2017 02/28/2020
Tom Savory 129 South Saluda Avenue Columbia, SC 29205 **District 3** ***Architect***	04/14/2015 06/19/2018	05/01/2015 06/20/2018	04/30/2018 06/19/2021
Paul Bouknight 1324 Confederate Avenue Columbia, SC 29201 **District 1** ***Community Representative***	04/14/2015 06/19/2018	05/01/2015 06/20/2018	04/30/2018 06/19/2021
VACANT ***Planner***			
James M. Daniel III 1 Rice Court Columbia, SC 29205 **District 3** ***Attorney***	12/06/2016	12/07/2016	12/06/2019
Angi Fuller-Wildt 3409 Keenan Drive Columbia, SC 29201 **District 1**	01/10/2017	02/01/2017	02/01/2020

Architectural Historian

Robert Broom 3507 Monroe Street Columbia, SC 29205 **District 3**	12/06/2016	12/07/2016	12/06/2019

Architect

We Are Columbia

TO: Ms. Teresa Wilson, City Manager

FROM: Ashley Jenkins, Office of the City Manager

DATE: November 19, 2019

SUBJECT: Property Maintenance Board of Appeals

Purpose: The purpose of this commission is to provide for the orderly disposition of the business of the Property Maintenance Board of Appeals (Board) by codifying the means by which that business is to be transacted.

Composition: This commission is comprised of seven (7) members. Appointees serve a three (3) year term with the possibility of one (1) re-appointment.

Action:

- Council is also asked to Appoint two (2) applicants who are qualified by experience and training (i.e. architect, contractor, engineer, property manager) to pass on matters pertaining to property maintenance.) Council is also asked to reconsider an appointment.

District Representation:

- District 1 – 0
- District 2 – 1
- District 3 – 0
- District 4 – 1
- Outside City Limits – 3

District Representation of Applicants:

There are five (5) applications for consideration for new appointments.

- District 1 – 0
- District 2 – 0
- District 3 – 1
- District 4 – 1
- Outside City Limits – 1

APPLICANTS

Catherine Culbertson- Shelton
1113 Fairview Drive
Columbia, SC 29205
District 3

Human Resources Generalist
Security Management of sc
2712 Middleburg Drive, Ste. 207
Columbia, SC 29204
District 3

Ronald Thompson
138 Gayle Pond Trace
Columbia, SC 29209
District 3
Retired

Michael Magill
1807 Pendleton Street
Columbia, SC 29201
District 3

VP of Engineering
Retired

Joseph Terry
4619 Trenholm Rd.
Columbia, SC 29206
Outside of City Limits

Business Owner
Palmetto Maintenance & Cleaning Services, LLC
4619 Trenholm Rd.
Columbia, SC 29206
Outside of City Limits

Brian Poirrier
1600 Marina Rd #105A
Irmo, SC 29063
Outside of the City Limits

Associate Agent/ Realtor
The ART of Real Estate
2903 Millwood Ave
Columbia, SC 29205
District 3

CURRENT MEMBERS

	APPOINTED	STARTS	ENDS
William Scott Barnes 1850 Atlantic Ave. # 316 Columbia, SC 29210 (803) 678-8912 barnesws@email.sc.edu **District 2** Area Manager/Professor Jackson Hewitt/University of South Carolina (803) 771-7444	06/07/2016 10/01/2019	07/01/2016 10/01/2019	06/30/2019 10/01/2022
Leslie Williams 2109 Woodtrail Drive Columbia, SC 29210 **Outside City Limits** **Property Manager/Owner** Superior Management LLC	07/2016 10/01/2019	08/01/2016 10/01/2019	08/01/2019 10/01/2022
Tammy Davis 751 Mallet Hill Road Columbia, SC 29223 **Outside City Limits** **Property Manager** Bluebird Property Management	06/07/2016 10/01/2022	07/01/2016 10/01/2022	06/30/2019 10/01/2022
Carolyn Sawyer 1720 Beltline Blvd. Columbia, SC 29206 (803) 414-0222 **District 4** President/CEO Tom Sawyer Company (803) 729-9373 Carolyn@tomsawyercompany.com	06/07/2016 10/01/2022	07/01/2016 10/01/2022	06/30/2019 10/01/2022

	APPOINTED	STARTS	ENDS
Michael Bailey	06/07/2016	07/01/2016	06/30/2019
29 Wishmore Court	10/01/2019	10/01/2019	10/01/2022
Hopkins, SC 29061			
(803) 514-7238			
Outside City Limits			

Program Coordinator
DHEC
(803) 898-3324
baileymb@dhec.sc.gov

~~**Kathryn Brian Fenner ***~~
~~*Not eligible for reappointment~~
~~700 Henderson St.~~
~~Columbia, SC 29201~~
~~(803) 467-7586~~
~~fenner.kb@gmail.com~~
~~**District 3**~~

~~Retired Lawyer~~

~~**Jeff Caswell**~~
~~*Seeking Reappointment, but not Eligible for Reappointment*due to Term Limit~~
~~31 Churchhill Circle~~
~~Columbia, SC 29206~~
~~(803) 608-8585~~
~~**District 4**~~

~~CFO~~
~~W.O. Blackstone~~
~~(803) 252-8222~~
~~jcaswell@woblackstone.com~~

We Are Columbia

APPLICATION FOR BOARDS AND COMMISSIONS
CITY OF COLUMBIA
SOUTH CAROLINA

Board or Commission for which you are applying:				Area of knowledge as it pertains to this board/commission:		
Property Maintenance Board of Appeals				Homeowner in a historic district with renters and owners. Have been involved in code enforcement issues.		
Your Name (Last, First Middle)	Race	Gender	Age	County	Council District:	
Culbertson-Shelton, Catherine Anne	W	F	28	Richland		
Residential Address				City	State	Zip Code
1113 Fairview Drive				Columbia	South Carolina	29205
Mailing Address				City	State	Zip Code
1113 Fairview Drive				Columbia	South Carolina	29205
Your Occupation – Title				Business Phone	Residence/Mobile Phone	
Human Resources Generalist				803-775-1259	803-740-8103	
Employer Name				E-Mail Address		
Security Management of SC				catherineanne.culbertson@gmail.com		
Employer Address				City	State	Zip Code
2712 Middleburg Drive Ste 207				Columbia	SC	29204
Emergency Point of Contact				Relationship	Contact Number	
Joshua Shelton				Spouse	803-740-8101	

GENERAL QUALIFICATIONS

Are you a resident of the city? How long? Recommended by:

(Yes) No 4 years. Recommended by Martha Fowler

Why would you like to serve on this board or commission?

Looking to be more involved in the city and with my neighborhood.

Do you presently serve on any Commissions / Boards of the City / County / State? If so, please list.

NoMa Bark Park Board Member and Secretary.

Have you formerly served on any Commissions / Boards of the City / County / State? If so, please list.

N/A

Are you currently in a position of responsibility with an organization or board that has received or is seeking funding from the City of Columbia? If so, list the position and date.

No.

Please list any Community Activities that you are involved in.

Neighborhood events like the On the Table Dinners, Halloween party, etc.

What are your goals and objectives if appointed to the Commission / Board?

To serve my community and strive to make it a more equitable place for all residents.

If appointed I am eligible to serve on no more than one (1) board/commission with a maximum of two (2) terms. I understand that this application will be on file for no longer than two (2) years.

C Culbertson-Shelton 11/07/2019

Signature Date

RETURN COMPLETED FORM TO:

City of Columbia
ATTN: Ashley Jenkins
Post Office Box 147
Columbia, SC 29217
Email: Ashley.Jenkins@columbiasc.gov

FOR OFFICE USE ONLY

Received:	
Appointed to:	
Date Approved:	
Term Dates:	

APPLICATION FOR BOARDS AND COMMISSIONS
CITY OF COLUMBIA
SOUTH CAROLINA

We Are Columbia

Board or Commission for which you are applying: Property Maintenance Board of Appeals				Area of knowledge as it pertains to this board/commission: Working Knowledge of City Code		
Your Name (Last, First Middle) Thompson, Ronald Alphonso	Race AA	Gender M	Age 65	County Richland	Council District: 3	
Residential Address 138 Gayle Pond Trace				City Columbia	State South Carolina	Zip Code 29209
Mailing Address Same				City	State South Carolina	Zip Code
Your Occupation – Title Retired: Chief Mediator, Human Affairs Commission				Business Phone	Residence/Mobile Phone (803) 730-3928	
Employer Name NA				E-Mail Address ronalt56@gmail.com		
Employer Address NA				City	State	Zip Code
Emergency Point of Contact Marilyn Johnson-Thompson				Relationship Spouse	Contact Number (803) 603-6772	

GENERAL QUALIFICATIONS

Are you a resident of the city? Yes No

How long? Yes...over 40 years...mutual aquaintance of several Council members including Mayor

Recommended by:

Why would you like to serve on this board or commission?

Desire that citizens understand importance of preserving property values and adherance to code

Do you presently serve on any Commissions / Boards of the City / County / State? If so, please list.

not presently...

Have you formerly served on any Commissions / Boards of the City / County / State? If so, please list.

Community Relations Council, former Chair;Township Auditorium Board of Trustees, former Chair

Are you currently in a position of responsibility with an organization or board that has received or is seeking funding from the City of Columbia? If so, list the position and date.

No

Please list any Community Activities that you are involved in.

President, Ashewood Homeowners Assocation

What are your goals and objectives if appointed to the Commission / Board?

Ensure that appeals are based on merit and educate unsuccessful applicants to expected standards

If appointed I am eligible to serve on no more than one (1) board/commission with a maximum of two (2) terms. I understand that this application will be on file for no longer than two (2) years.

Ronald A Thompson
Signature

10/26/19
Date

RETURN COMPLETED FORM TO:

City of Columbia
ATTN: Ashley Jenkins
Post Office Box 147
Columbia, SC 29217
Email: Ashley.Jenkins@columbiasc.gov

FOR OFFICE USE ONLY

Received:	
Appointed to:	
Date Approved:	
Term Dates:	

APPLICATION FOR BOARDS AND COMMISSIONS
CITY OF COLUMBIA
SOUTH CAROLINA

We Are Columbia

Board or Commission for which you are applying				Area of knowledge as it pertains to this board commission:			
Property Maintenance Board of Appeals				45 years experience in mechanical er			
Your Name (Last, First, Middle)	Race	Gender	Age	County	Council District		
Magill, Michael John	Cauc	M	69	Richland	District III		
Residential Address				City	State	Zip Code	
1807 Pendleton St				Columbia	South Carolina	29201	
Mailing Address				City	State	Zip Code	
1807 Pendleton St				Columbia	South Carolina	29201	
Your Occupation / Title				Business Phone	Residence / Mobile Phone		
Vice-President Engineering (retired)					803 361 5045		
Employer Name				E-Mail Address			
				jmagill396@gmail.com			
Employer Address				City	State	Zip Code	
Emergency Point of Contact				Relationship	Contact Number		
Dr. Charla Wofford				stepdaughter			

GENERAL QUALIFICATIONS

Are you a resident of the city? How long? Recommended by

Yes No Yes, I reside in the city, since 2000. Kathryn Fenner, a current Board member, has reco

Why would you like to serve on this board or commission?

This is a good opportunity to serve the community using my knowledge and skills developed over m

Do you presently serve on any Commissions / Boards of the City / County / State? If so, please list.

No

Have you formerly served on any Commissions / Boards of the City / County / State? If so, please list.

No

Are you currently in a position of responsibility with an organization or board that has received or is seeking funding from the City of Columbia? If so, list the position and date.

No

Please list any Community Activities that you are involved in.

University Hill Neighborhood Association Executive Council member (treasurer), member of the Colu

What are your goals and objectives if appointed to the Commission / Board?

To faithfully perform the duties of a board member, attending meetings regularly, and seeking informa

If appointed I am eligible to serve on no more than one (1) board/commission with a maximum of two (2) terms. I understand that this application will be on file for no longer than two (2) years.

Signature

Date

RETURN COMPLETED FORM TO:

City of Columbia
ATTN: Ashley Jenkins
Post Office Box 147
Columbia, SC 29217
Email: AshleyJenkins@columbiasc.gov

FOR OFFICE USE ONLY

Received:	
Appointed to:	
Date Approved:	
Term Dates:	

APPLICATION FOR BOARDS AND COMMISSIONS
CITY OF COLUMBIA
SOUTH CAROLINA

We Are Columbia

Board or Commission for which you are applying:				Area of knowledge as it pertains to this board/commission:	
Property Maintenance Board of Appeals				Currently operate a property maintenance company	
Your Name (Last, First Middle)	Race	Gender	Age	County:	Council District:
Terry, Joseph Austin		M	33	Richland	District 4
Residential Address				City	State / Zip Code
4619 Trenholm Rd				Columbia	South Carolina 29206
Mailing Address				City	State / Zip Code
4619 Trenholm Rd				Columbia	South Carolina 29206
Your Occupation - Title				Business Phone	Residence/Mobile Phone
Business Owner				8034774063	8034774063
Employer Name				E-Mail Address	
Palmetto Maintenance & Cleaning Services. LLC				jterry8507@gmail.com	
Employer Address				City	State / Zip Code
4619 Trenholm Rd				Columbia	SC 29206
Emergency Point of Contact				Relationship	Contact Number
Jennifer Terry				Spouse	8034774067

GENERAL QUALIFICATIONS

Are you a resident of the city? (Yes) No — How long? 6 years — Residence

Why would you like to serve on this board or commission?

Please see attached document

Do you presently serve on any Commissions / Boards of the City / County / State? If so, please list.

No

Have you formerly served on any Commissions / Boards of the City / County / State? If so, please list.

No

Are you currently in a position of responsibility with an organization or board that has received or is seeking funding from the City of Columbia? If so, list the position and don

No

Please list any Community Activities that you are involved in

Please see attached document

What are your goals and objectives if appointed to the Commission / Board?

Please see attached document

If appointed I am eligible to serve on no more than one (1) board/commission with a maximum of two (2) terms. I understand that this application will be on file for no longer than two (2) years.

Signature — 6/15/2019 Date

RETURN COMPLETED FORM TO:
City of Columbia
ATTN: Ashley Jenkins
Post Office Box 147
Columbia, SC 29217
Email: Ashley.Jenkins@columbiasc.gov

FOR OFFICE USE ONLY

Received:	
Appointed to:	
Date Approved:	
Term Dates:	

Continuation Sheet: Property Maintenance Board of Appeals Application for Joseph Terry

Why would you like to serve on this board or commission?

I have always felt a strong sense of civic duty and now that I am no longer in the United States Army I would like to continue that service. I feel my experience in owning and operating a Property Maintenance company and my interaction with property manager clients and their tenants gives me a unique perspective that I could bring to this board.

Please list any Community Activities that you are involved in.

I am a member and serve as the secretary of the board of directors for Square & Compass Inc., a non-profit responsible for the management and maintenance of 1518 Hampton St. in downtown Columbia and the approximate 450 members it serves. I serve on the Board of Directors for the Rite Care Foundation of South Carolina, a non-profit that provides free speech pathology access to children in need. I was elected to serve as the head of my local Masonic Lodge consisting of approximately 150 members for two years in a row. Through the different organizations I am involved in I have served on several committees to include Fundraising, Building and Grounds, and By-laws committees.

What are your goals and objectives if appointed to the Commission/Board?

To help give back and serve my community by putting my experiences and skills to use in helping to resolve issues that may occur between owner/managers and the Housing Official or Code Enforcement.

APPLICATION FOR BOARDS AND COMMISSIONS
CITY OF COLUMBIA
SOUTH CAROLINA

We Are Columbia

Board or Commission for which you are applying:				Area of knowledge as it pertains to this board/commission:		
Property Maintenance Board of Appeals				Realtor, Multifamily Property Management, Investor		
Your Name (Last, First Middle)	Race	Gender	Age	County	Council District:	
Poirrier, Brian R	W	M	30	Richland		
Residential Address				City	State	Zip Code
1600 Marina Rd #105A				Irmo	South Carolina	29063
Mailing Address				City	State	Zip Code
1600 Marina Rd #105A				Irmo	South Carolina	29063
Your Occupation - Title				Business Phone	Residence/Mobile Phone	
Associate Agent/ Realtor				803.250.6869	803.250.6869	
Employer Name				E-Mail Address		
The ART of Real Estate				Brian@AOREColumbia.com		
Employer Address				City	State	Zip Code
2903 Millwood Ave				Columbia	SC	29205
Emergency Point of Contact				Relationship	Contact Number	
Brigette Poirrier				Wife	517.230.9448	

GENERAL QUALIFICATIONS

Are you a resident of the city? How long? Recommended by:

Yes No

No, I work in the city and focus on sales and investments of smaller multifamily property

Why would you like to serve on this board or commission?

To assist with misunderstandings based on my experience and continue to learn and be involved

Do you presently serve on any Commissions / Boards of the City / County / State? If so, please list.

No

Have you formerly served on any Commissions / Boards of the City / County / State? If so, please list.

No

Are you currently in a position of responsibility with an organization or board that has <u>received</u> or is <u>seeking</u> funding from the City of Columbia? If so, list the position and date.

No

Please list any Community Activities that you are involved in.

N/A - Just moved here and looking to get involved

What are your goals and objectives if appointed to the Commission / Board?

Be involved with helping bridge communication with the city and property owners

If appointed I am eligible to serve on no more than one (1) board/commission with a maximum of two (2) terms. I understand that this application will be on file for no longer than two (2) years.

Signature

7/16/19

Date

<u>RETURN COMPLETED FORM TO:</u>

City of Columbia
ATTN: Ashley Jenkins
Post Office Box 147
Columbia, SC 29217
Email: Ashley.Jenkins@columbiasc.gov

<u>FOR OFFICE USE ONLY</u>

Received:	
Appointed to:	
Date Approved:	
Term Dates:	

2020 COUNCIL MEETING DATES

DRAFT

MEETING DATES	TYPE OF MEETINGS	AGENDA DEADLINES
January 7	Work Session & Council Meeting	December 25
January 21	Council Meeting/Zoning Public Hearing	January 8
January 29	State of the City Address	
February 4	Work Session & Council Meeting	January 22
February 18	Work Session & Council Meeting	February 5
March 3	Work Session & Council Meeting	February 19
March 17	Work Session & Council Meeting / Zoning Public Hearing	March 4
April 7	Work Session & Council Meeting	March 25
April 21	Work Session & Council Meeting	April 8
May 5	Work Session & Council Meeting	April 22
May 19	Work Session & Council Meeting / Zoning Public Hearing	May 6
June 2	Work Session & Council Meeting	May 20
June 16	Work Session & Council Meeting	June 3
July 7	Work Session & Council Meeting	June 24
July 21	Work Session & Council Meeting / Zoning Public Hearing	July 8
August 4	Work Session or Council Meeting / *National Night Out*	July 22
August 18	Work Session & Council Meeting	August 5
September 1	Work Session & Council Meeting	August 19
September 15	Work Session & Council Meeting / Zoning Public Hearing	September 2
October 6	Work Session & Council Meeting	September 23
October 20	Work Session & Council Meeting	October 7
November 3	Work Session & Council Meeting	October 21
November 17	Work Session & Council Meeting / Zoning Public Hearing	November 4
December 1	Work Session & Council Meeting	November 18
December 15	Work Session & Council Meeting	December 2

Work Sessions allows Council to effectively address issues that affect only a limited number of citizens; to consider items of high public interest; and as a means of avoiding prolonged regular meetings. City Council will conduct work sessions at **2:00 p.m.** on the first and third Tuesdays of each month.

Regular Meetings of Council are used to discuss the municipality's general and routine business and to enact necessary ordinances and resolutions. These meetings begin at **6:00 p.m.** on the first and third Tuesdays of each month.

Zoning Public Hearings are conducted on the third Tuesday of every odd numbered month at **7:00 p.m.** as part of a Regular Council Meeting.